Centre for Particle Accelerators Design at the Cracow University of Technology

Błażej Skoczeń

Cracow University of Technology

(Institute of Applied Mechanics, Centre for Particle Accelerators Design)

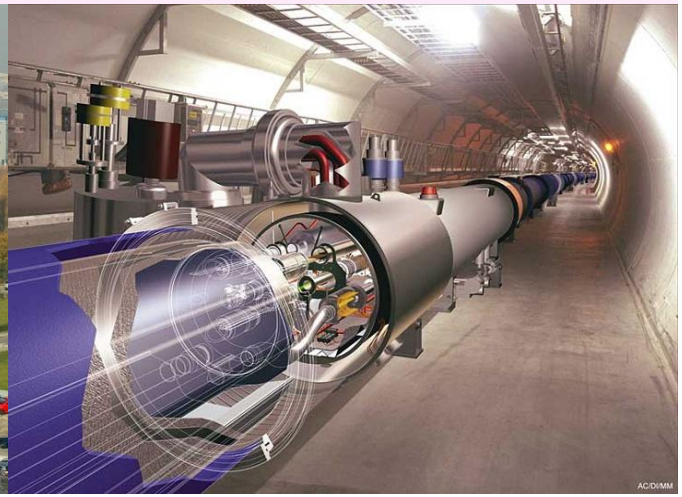

Outline

1. Contribution to LHC
2. Contribution to FAIR
3. Contribution to EUROν
4. Contribution to other projects
5. Fundamental research - materials for particle accelerators
6. Future contribution to Tiara

Task WP4.1:

1 Accelerator components

2 Accelerator technologies

3 Accelerator concepts

CUT contribution to LHC

History of CERN-CUT cooperation: Large Hadron Collider

1991:	Poland becomes member of CERN
1992-1996:	development of the structure of LHC main magnets
1994-1998:	development of the continuous cryostat for LHC
1995-2000:	development of the compensation system for LHC
2000-2003:	LHC prototype programme: String2
2000-2006:	development of carrying structures for LHC detectors

Scientific work related to LHC, carried out by CUT staff:

3 monographs including Springer book
1 habilitation thesis
4 PhD dissertations
11 MSc dissertations
More than 100 papers

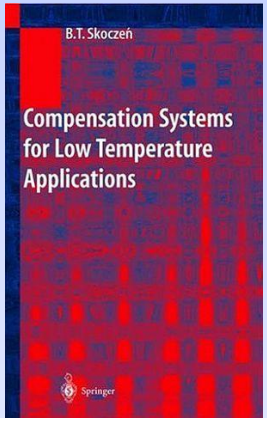

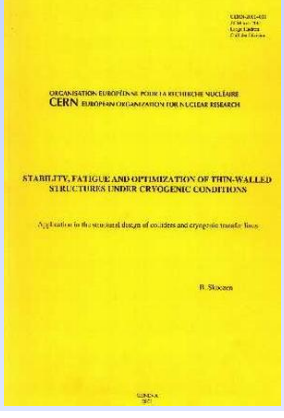

CUT contribution to LHC

Scientific associates and staff members from CUT:

1. Leszek Barwacz
2. Jan Bielski
3. Piotr Cupiał
4. Bogusław Górski
5. Ryszard Kantor
6. Maciej Krasiński
7. Jacek Krużelecki
8. Kazimierz Kowalczyk
9. Marek Kozień
10. Tadeusz Kurtyka
11. Stanisław Łaczek
12. Grzegorz Milewski
13. Błażej Skoczeń
14. Jacek Snamina
15. Bogdan Szybiński
16. Adam Wróblewski
17. Andrzej Zieliński
18. Daniel Ziemiański

PhD students from CUT:

1. Przemysław Lutkiewicz
2. Dawid Marcinek
3. Rafał Ortwein

Technical students and fellows from CUT:

1. Banaś Aleksander
2. Brodziński Krzysztof
3. Ciapa Robert
4. Herdzina Maciej
5. Juchno Mariusz
6. Krużelecki Karol
7. Lutkiewicz Przemysław
8. Łodziński Aleksander
9. Maciocha Dariusz
10. Maciocha Waldemar
11. Marcinek Dawid
12. Oleksy Maciej
13. Ortwejn Rafał
14. Sitko Adam
15. Sitko Monika
16. Tokarz Zbigniew
17. Wasek Dorota
18. Zelek Grzegorz

CUT contribution to LHC: superconducting magnets

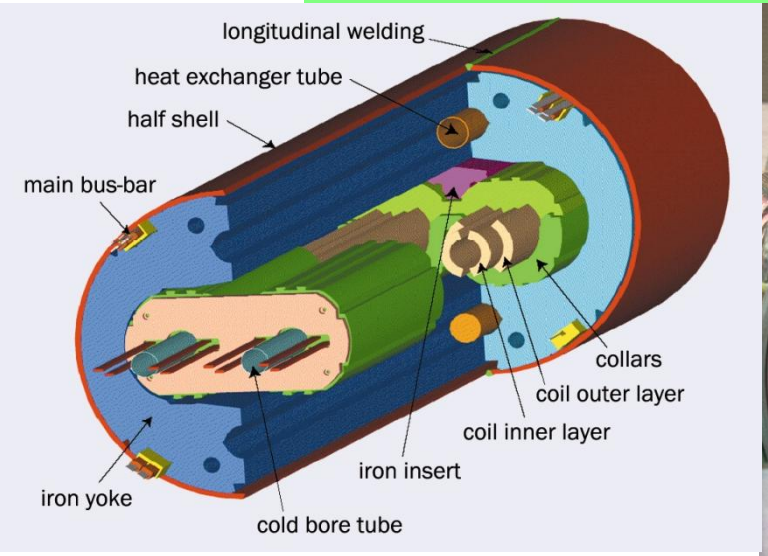

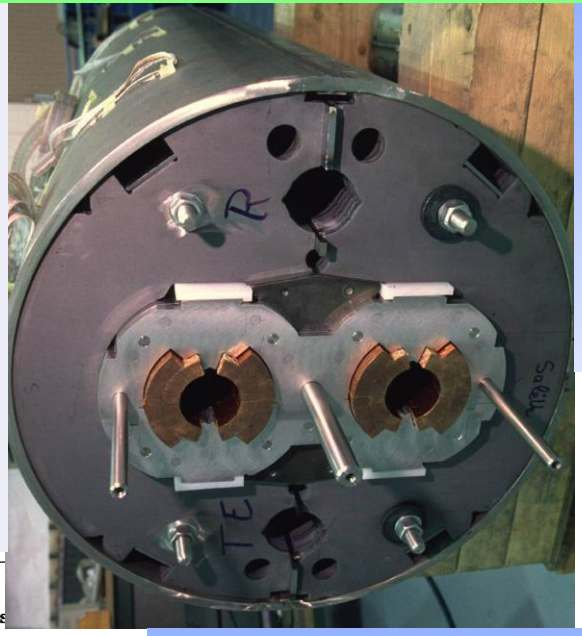

Design of magnets:
- **coils**
- **collars**
- **yoke**
- **shrinking cylinder**
- **heat exchangers**

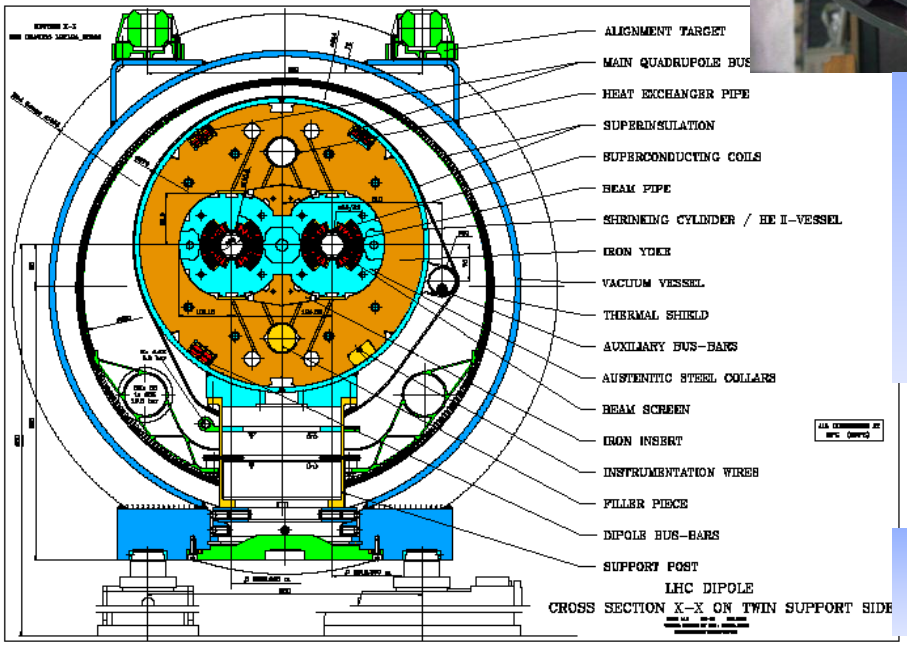

Contribution: analysis of laminated structures including contact problem

Competence: structural design of superconducting magnets

Andreyev, N. I., Artoos, K., Kurtyka, T. et al., Present State of the Single and Twin Aperture Short Dipole Model Program for the LHC, CERN-LHC-Project-Report-177. – 1998.

CUT contribution to LHC: interconnections

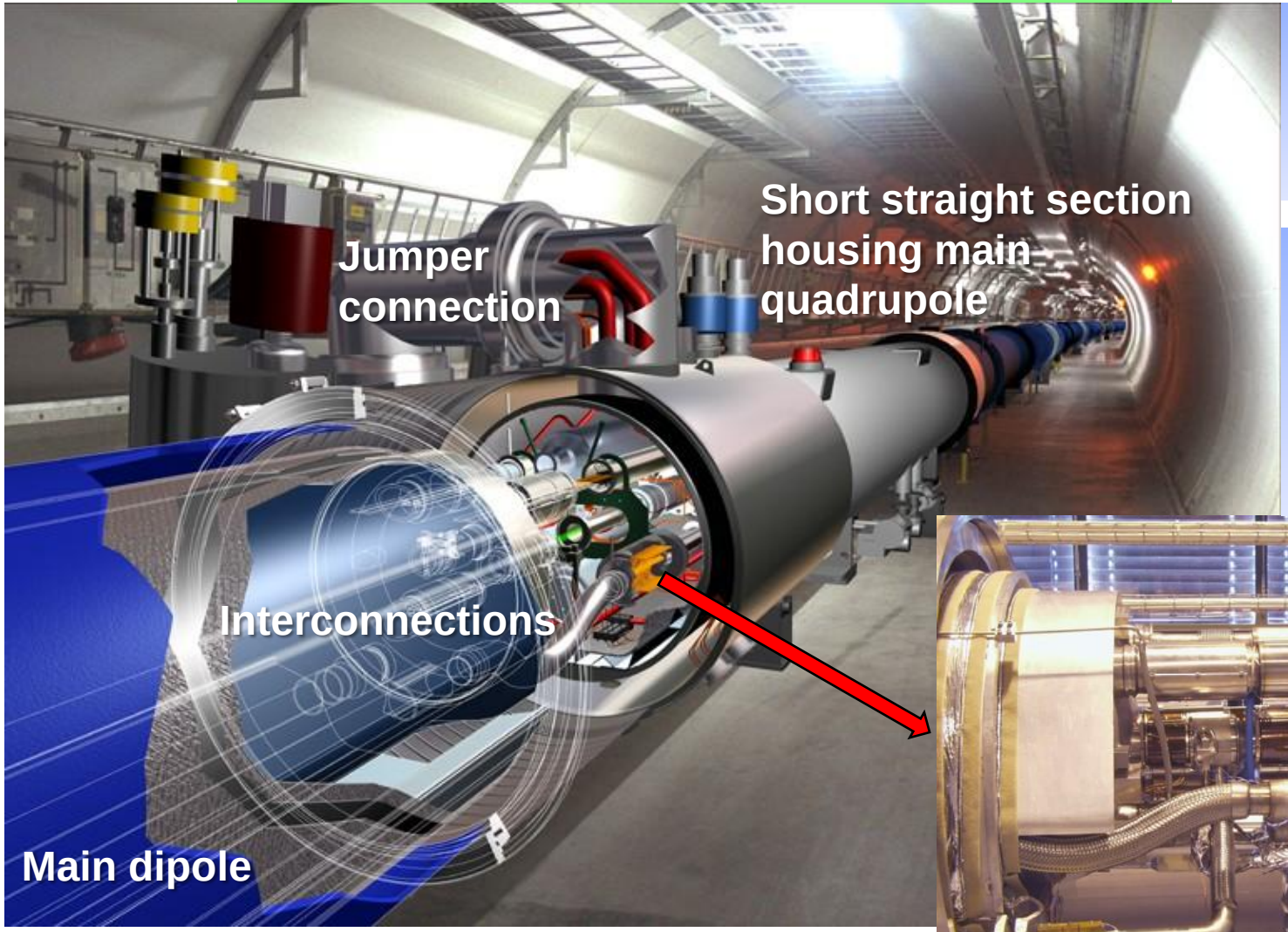

Design and optimisation of LHC interconnections

Competence:

Compensation systems based on expansion joints

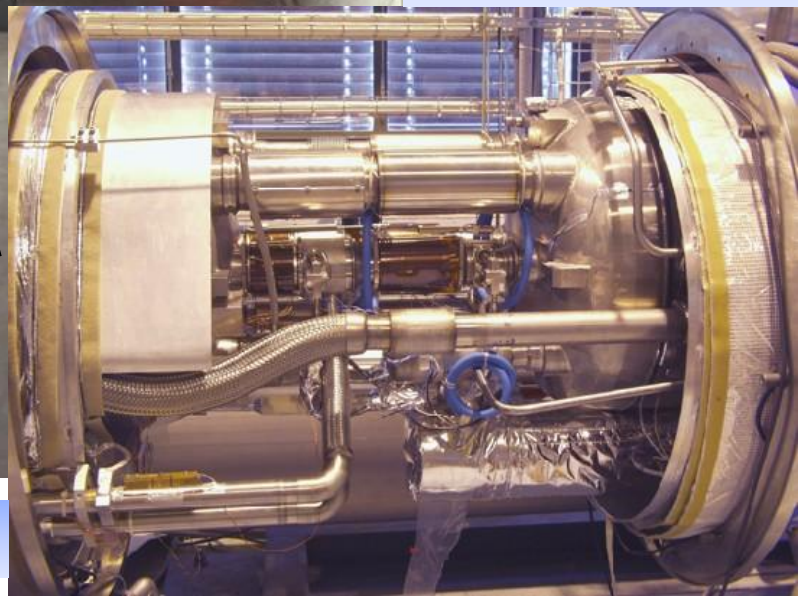

B. Skoczeń, Compensation systems for low temperature applications, Springer-Verlag, Berlin, Heidelberg, New York, 2004

CUT contribution to LHC: interconnections

Coupling between the cryogenic line (QRL) and the main quads

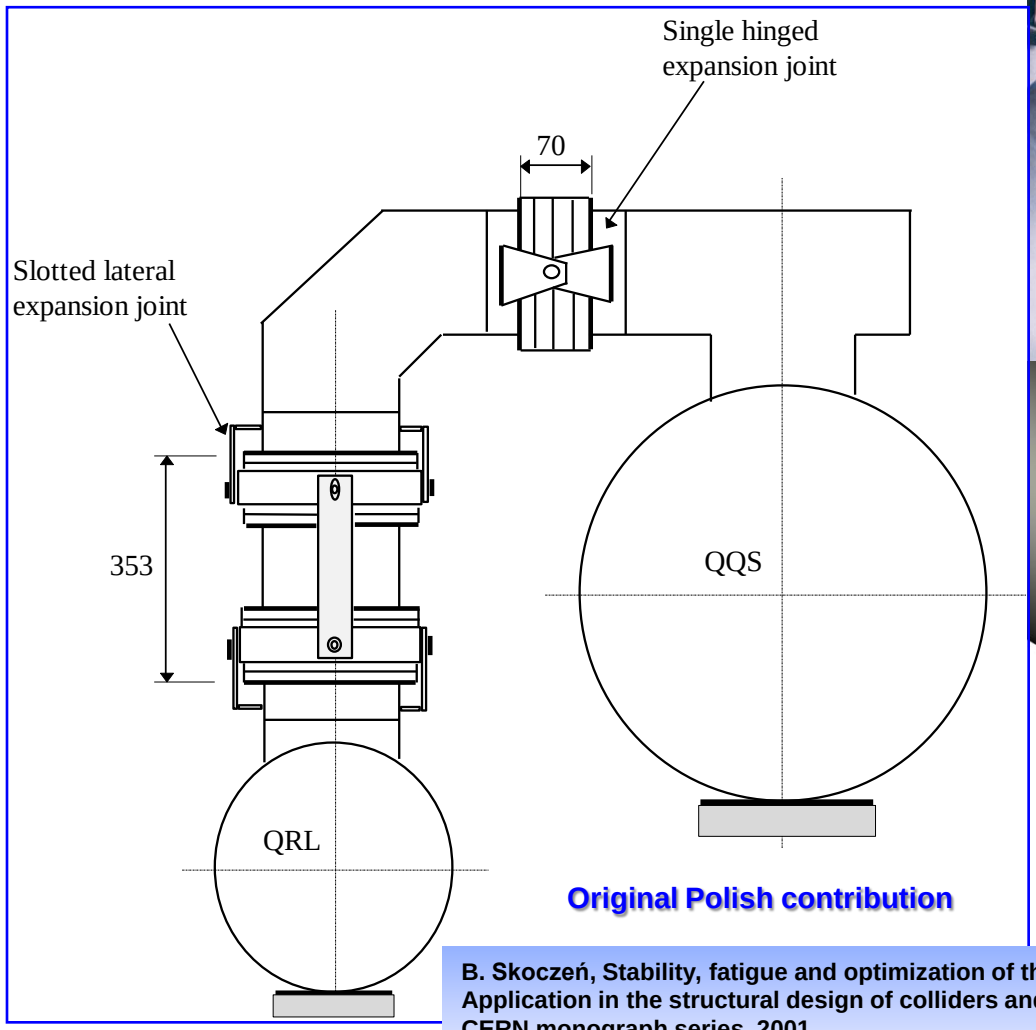

Original Polish contribution

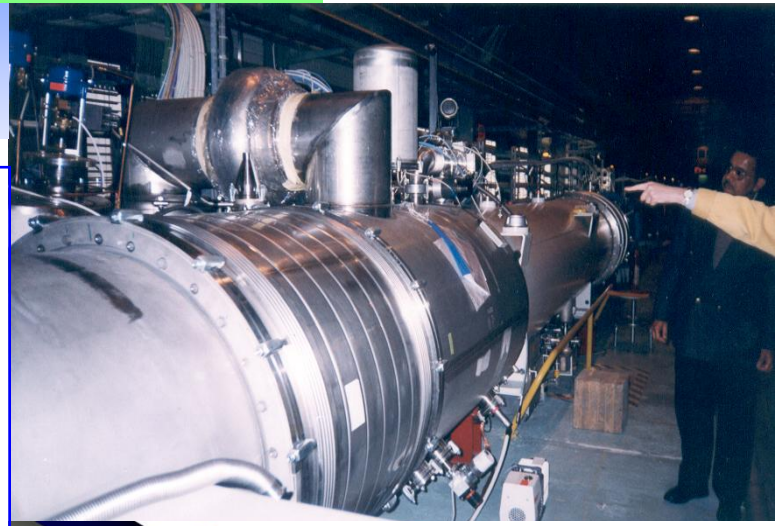

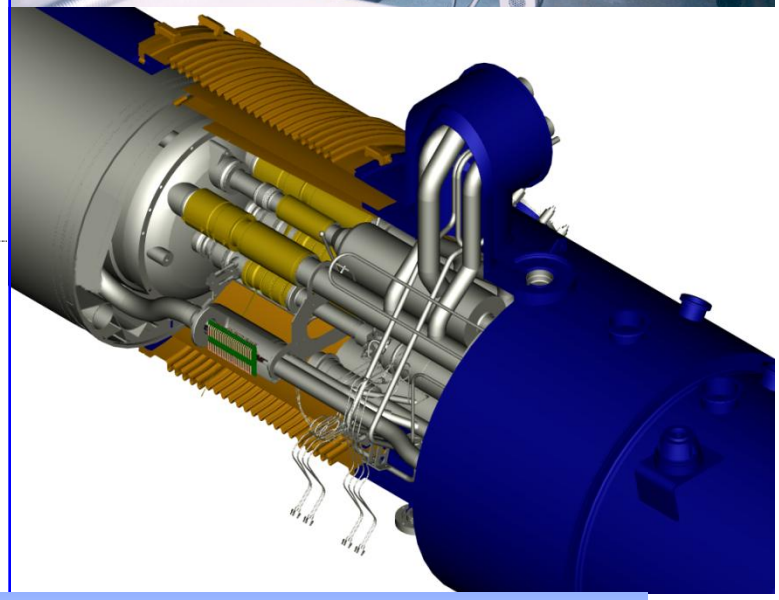

B. Skoczeń, Stability, fatigue and optimization of thin-walled structures under cryogenic conditions. Application in the structural design of colliders and cryogenic transfer lines, CERN-2001-001, 122 p., CERN monograph series, 2001.

CUT contribution to LHC: interconnections

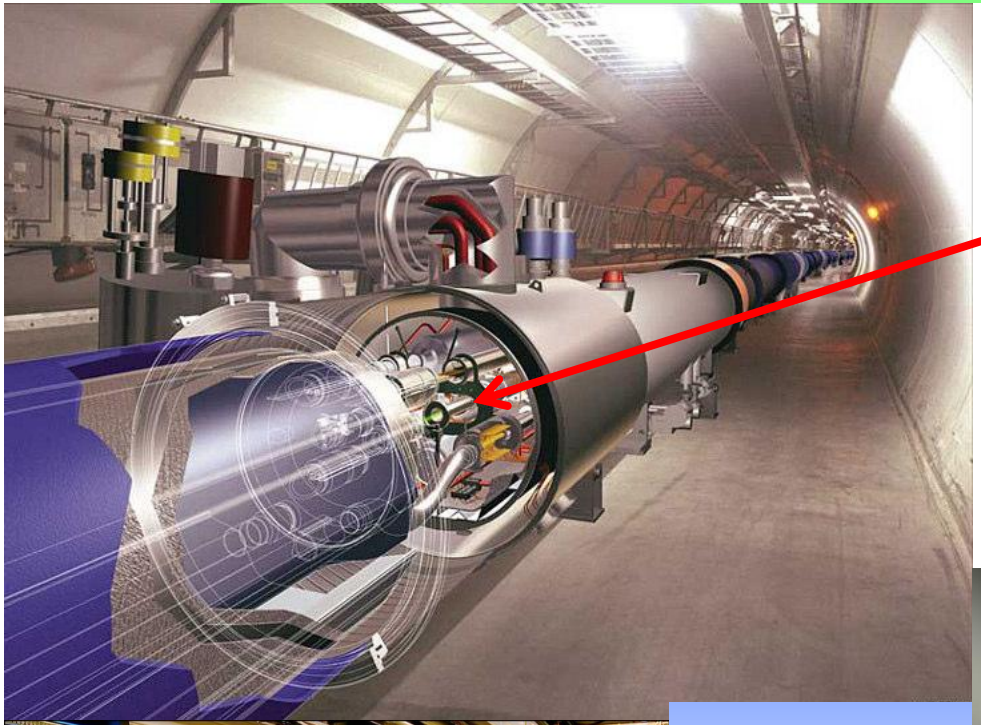

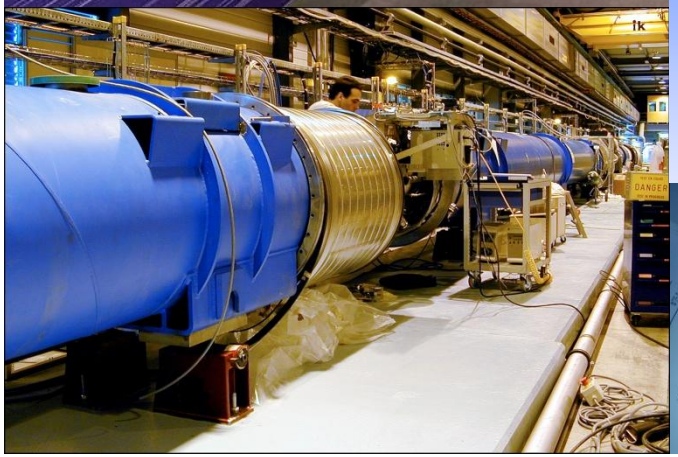

20000 expansion bellows

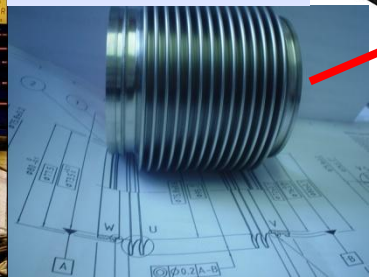

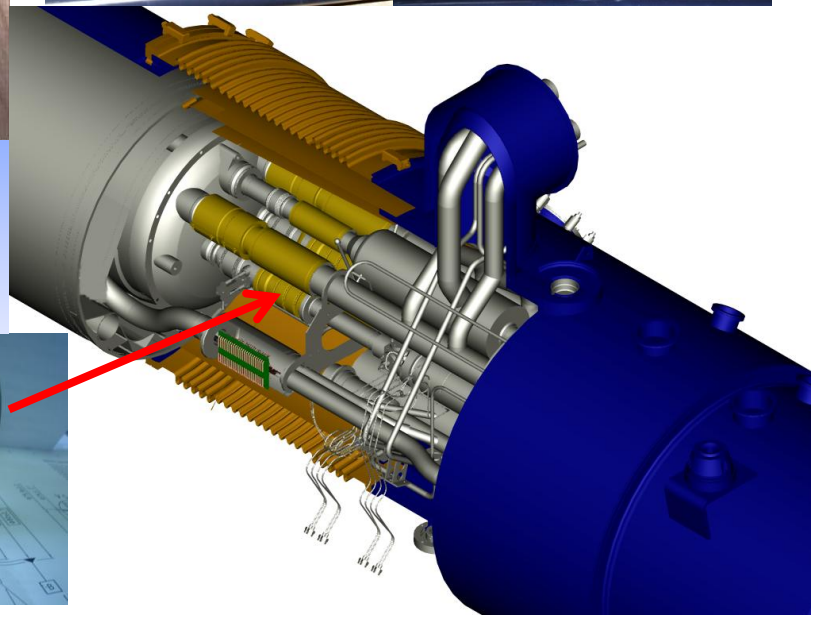

Thin-walled corrugated shells – expansion bellows

Structural optimisation

PARAMETRIC OPTIMIZATION OF BELLOWS

Competence: optimum design of expansion bellows

Length of bellows L=100 mm
Convolution depth W=10 mm
Inner diameter D_{in}=84 mm
Stroke +49/-29 mm
Design pressure for fatigue - 0 bar
Design pressure for stability - 1 bar
EJMA/93 stability conditions

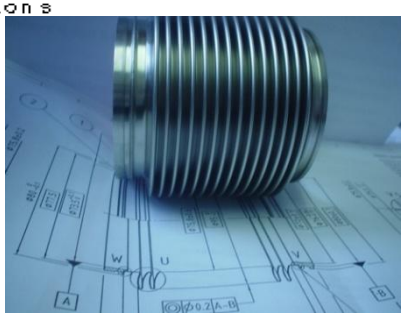

$$P\left[N_f(S_t) < N_{f0}\right] \le p_{3bl}$$

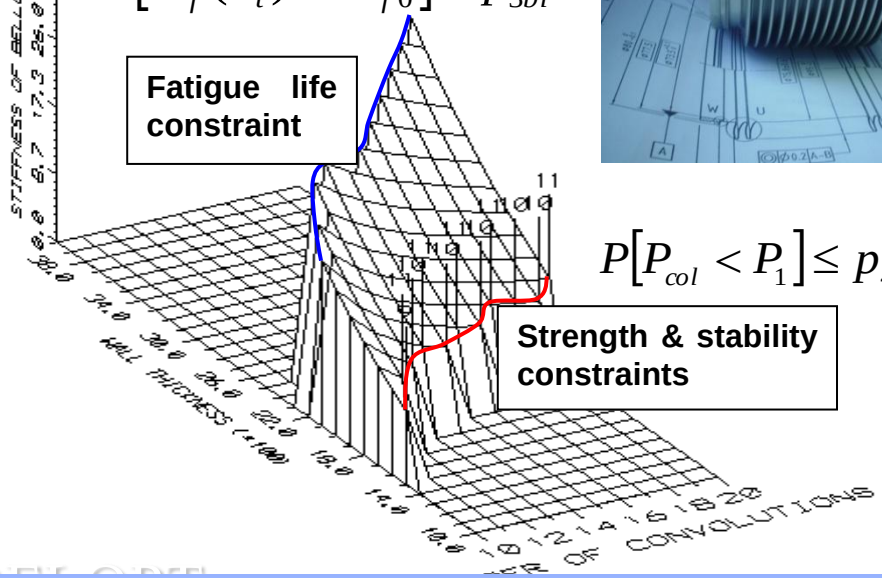

$$P\left[P_{col} < P_1\right] \le p_{4bl}$$

Improved chemical composition

Element	Specification 316L (CERN)	316L (1.4441, ESU/VAR) special grade
C	0.030 (max)	0.016
Si	1.00 (max)	0.510
Mn	2.00 (max)	1.760
P	0.030 (max)	0.017
S	0.010 (max)	0.001
Cr	16.00 - 18.50	17.63
Ni	11.00 - 14.00	14.26
Mo	2.00 - 2.50	2.74
N	0.050 (max)	0.060

Garion, C., Skoczeń, B., Reliability oriented optimum design of the LHC interconnections – Part I: mechanical compensation system, LHC Project Note 245, CERN, 2000.

Copper heat exchanger for the LHC insertion regions

Start of subcooling process in the magnets

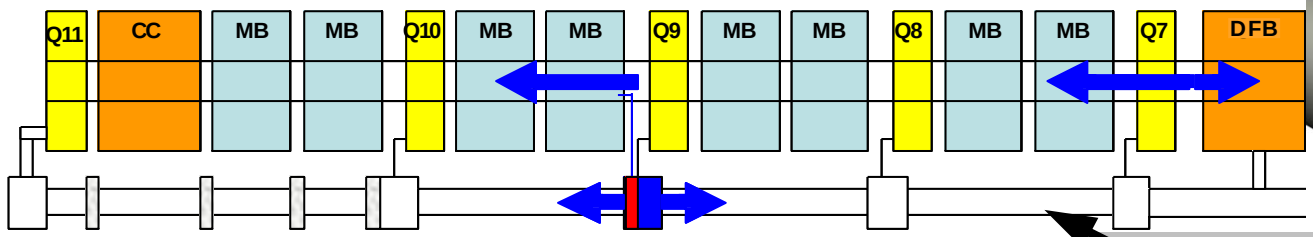

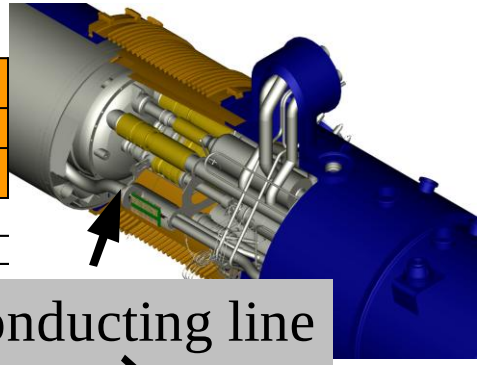

superconducting line

t = 0h - all magnets are cooled down

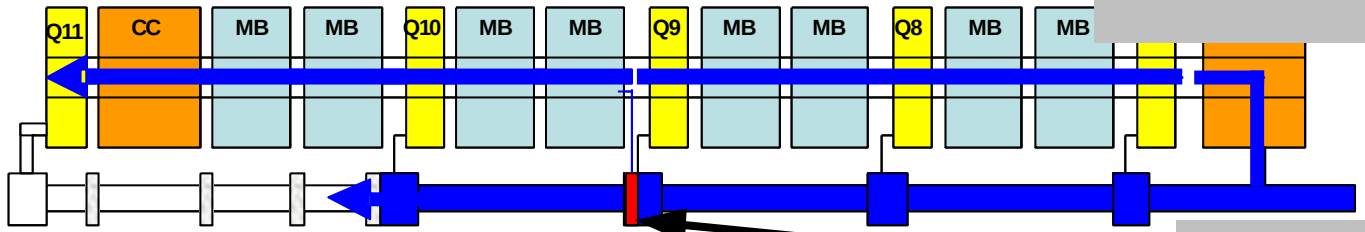

copper heat exchanger

t = 1.6h - superconducting line is cooled down

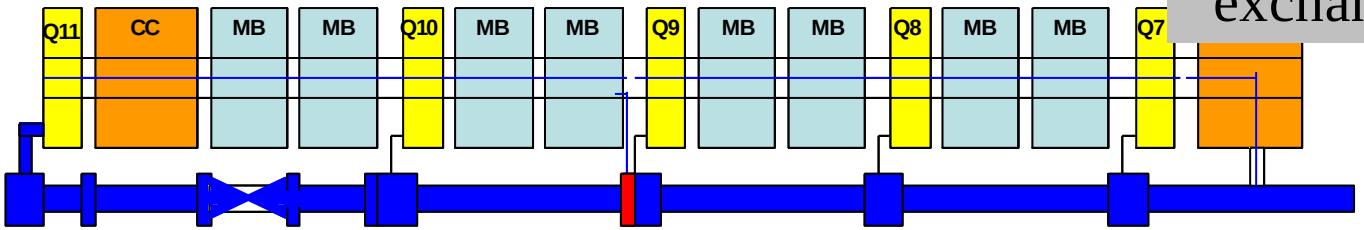

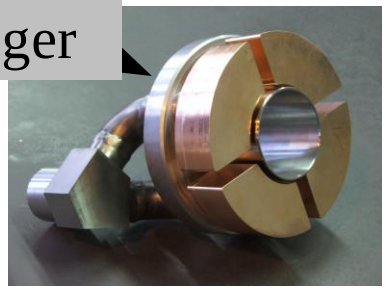

Sitko, M., Skoczeń, B., Model of HeI/HeII phase transition for the superconducting line powering LHC correctors, in: Proceedings of 1-st Int. Particle Accelerators Conference (IPAC'10), Kyoto, Japan, May, 2010.

Copper heat exchanger for the LHC insertion regions

TIARA 2012

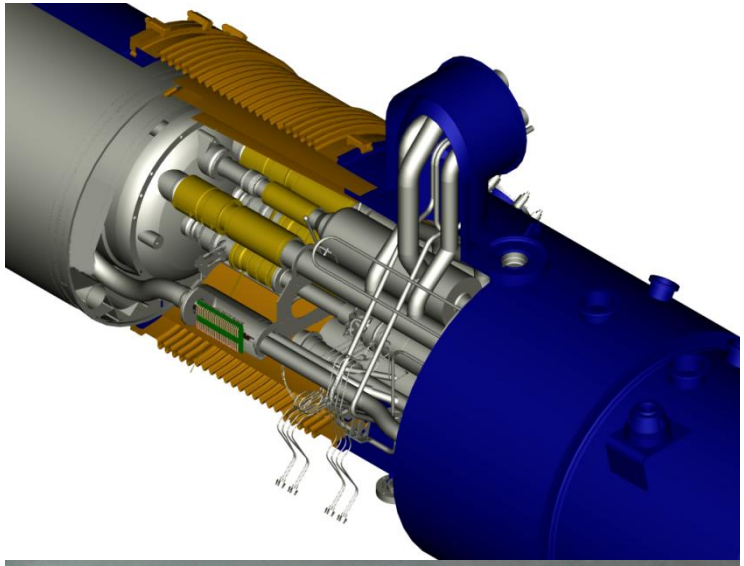

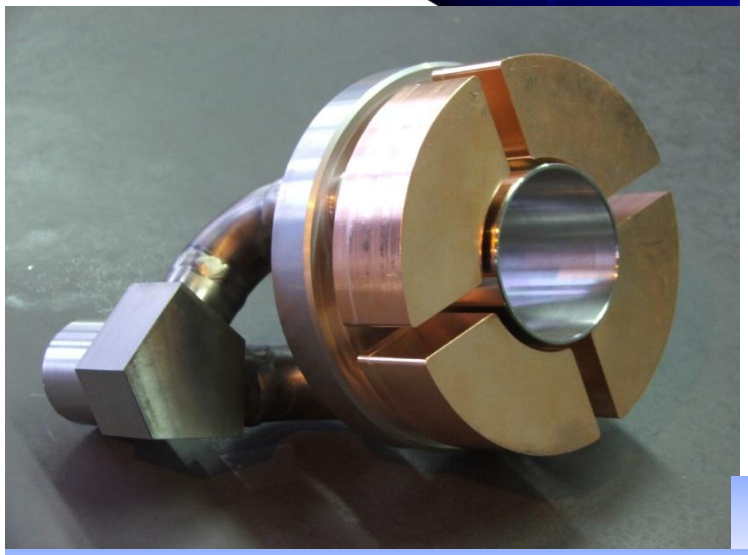

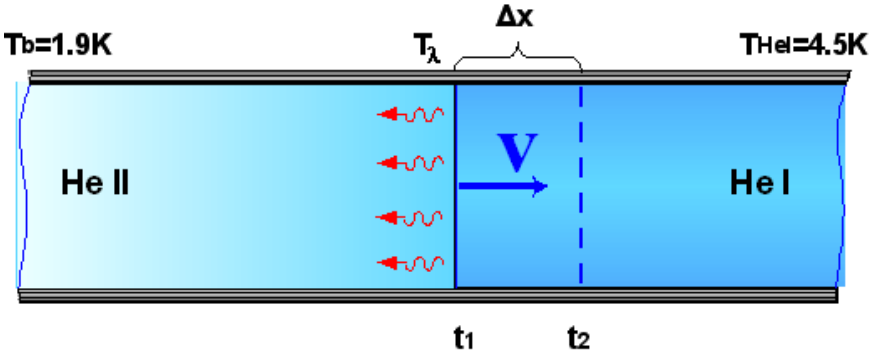

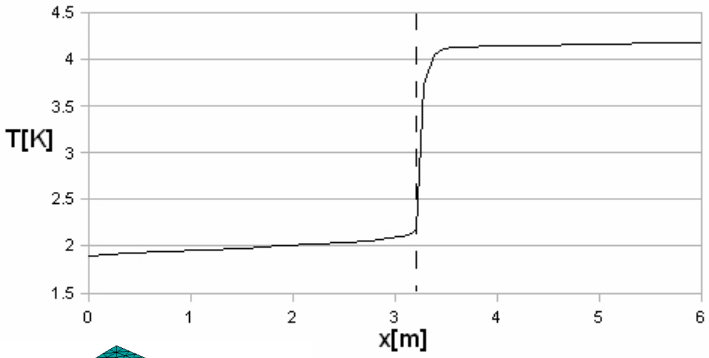

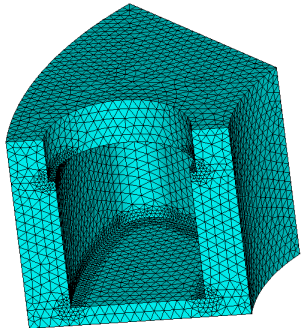

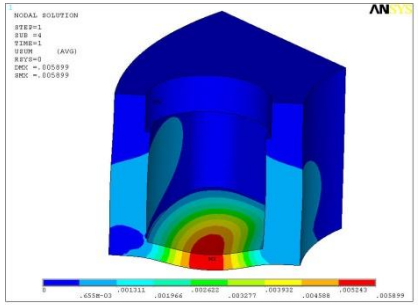

Competence: design of heat exchangers

M. Sitko, B. Skoczeń, Modelling He I–He II phase transformation in long channels containing superconductors, Int. J. Heat and Mass Transfer, 52 (2009) 9–16.

CUT contribution to LHC: transport conditions

Dynamic analysis of magnets under various sources of excitations

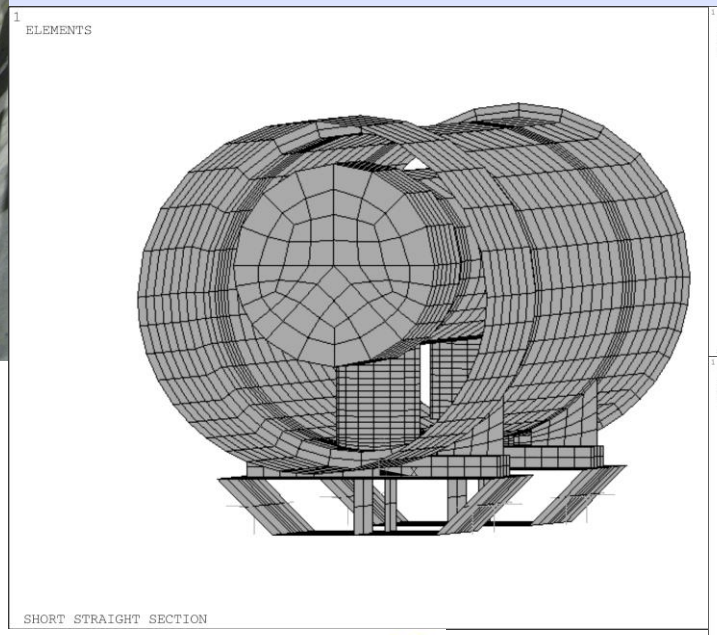

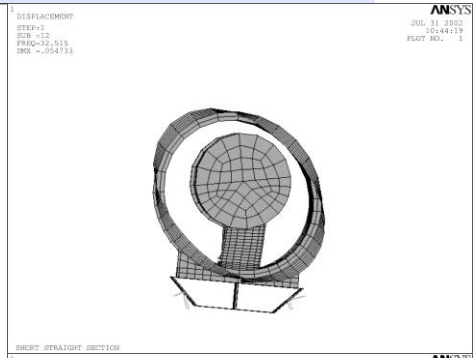

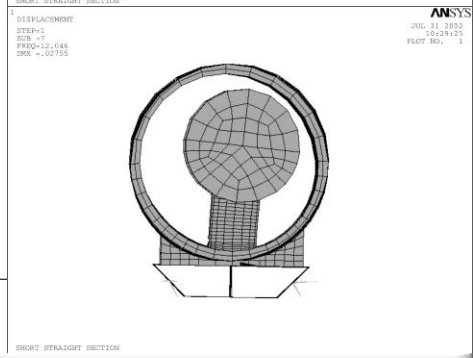

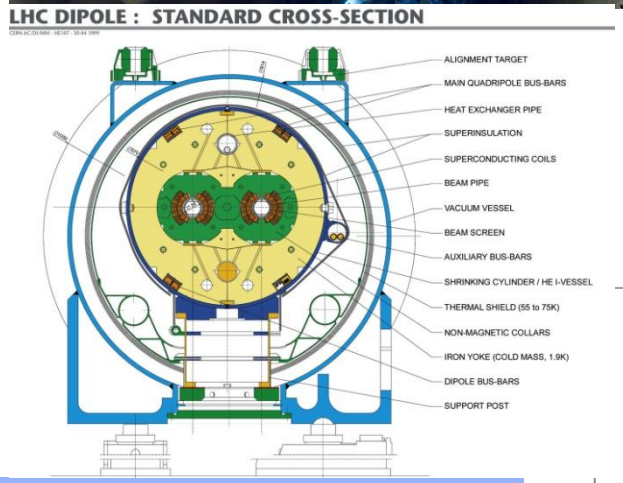

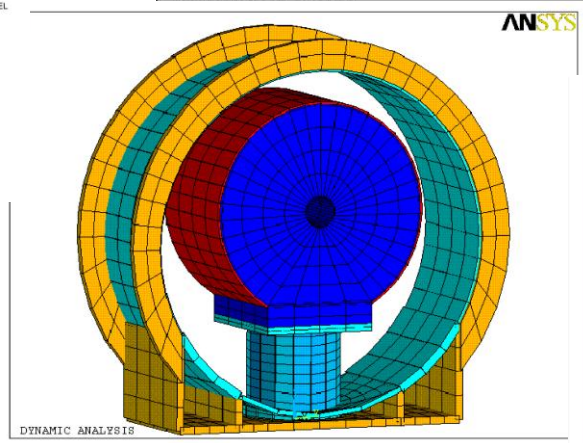

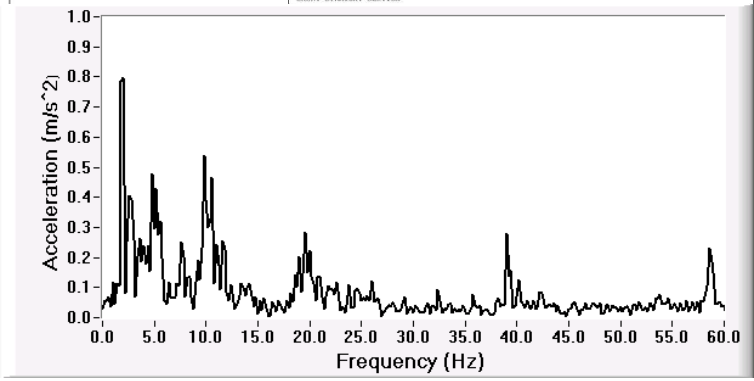

Competence:

Passive and active damping systems

LHC detectors – Alice

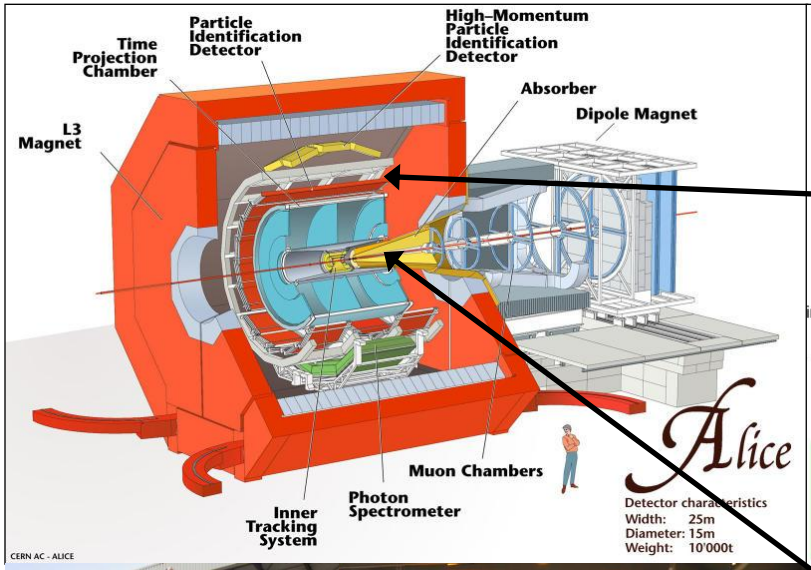

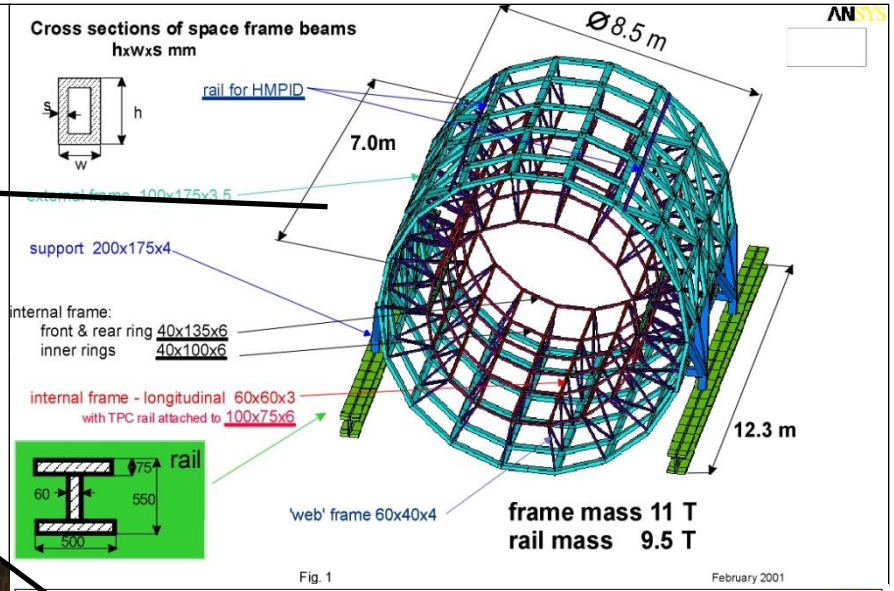

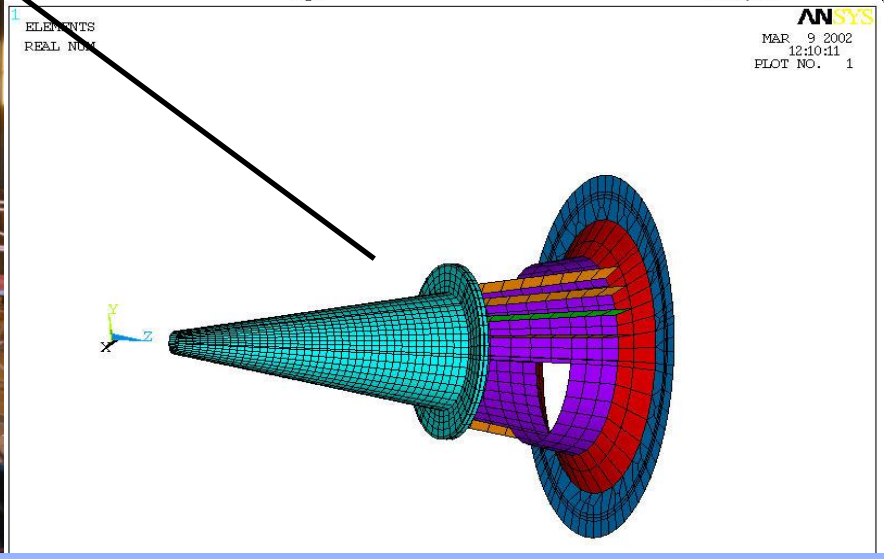

Competence: design of carrying structures

CUT contribution to LHC: experimental vacuum chambers

TIARA 2012

Scientific contribution:

Optimisation with respect to post-buckling path

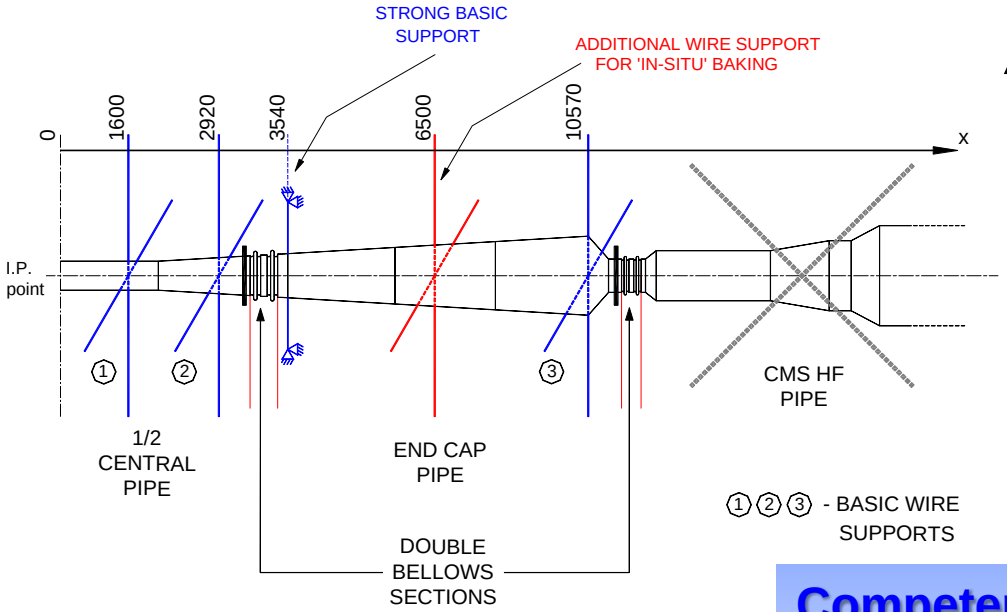

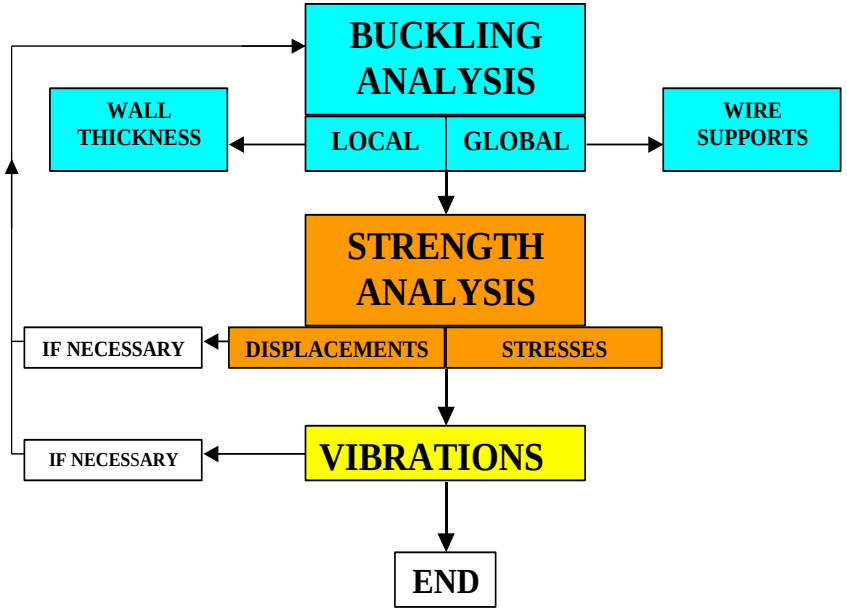

Competence:

Optimum design of vacuum chambers under strength and stability constraints

Lugan, A., Skoczeń, B., Kurtyka, T., Analyse de la stabilite mecanique et optimisation de chambres a vide experimentales pour les detecteurs du LHC, Technical Note EST-ESI/97-04, CERN, 1997.

Outline

1. Contribution to LHC
2. Contribution to FAIR
3. Contribution to EUROν
4. Contribution to other projects
5. Fundamental research - materials for particle accelerators
6. Future contribution to Tiara

Task WP4.1:

1 Accelerator components

2 Accelerator technologies

3 Accelerator concepts

FAIR: SIS100/SIS300

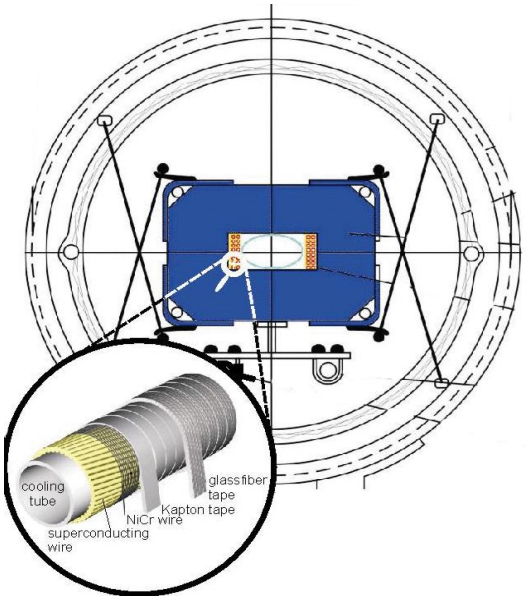

Dipole magnets SIS100
Type „Nuclotron”:
B=1.9 T,
dB/dt=4 T/s

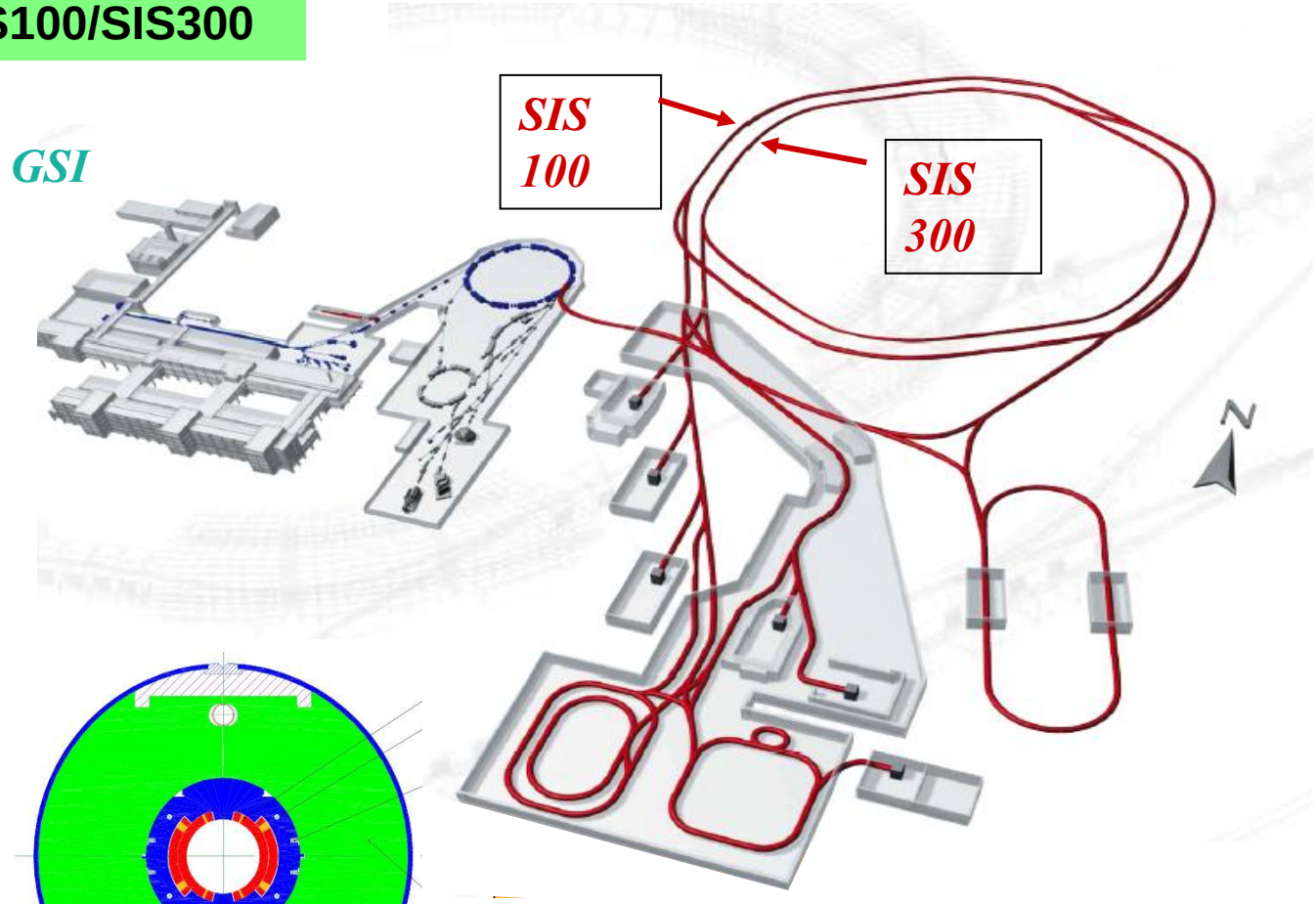

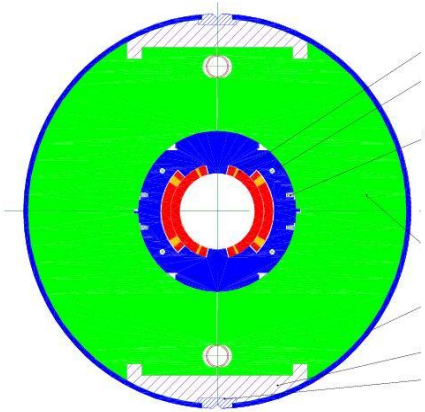

Dipole magnets SIS300
B=4.5 T; dB/dt=1 T/s

Magnets, cryostat, interconnections, cold-warm transitions

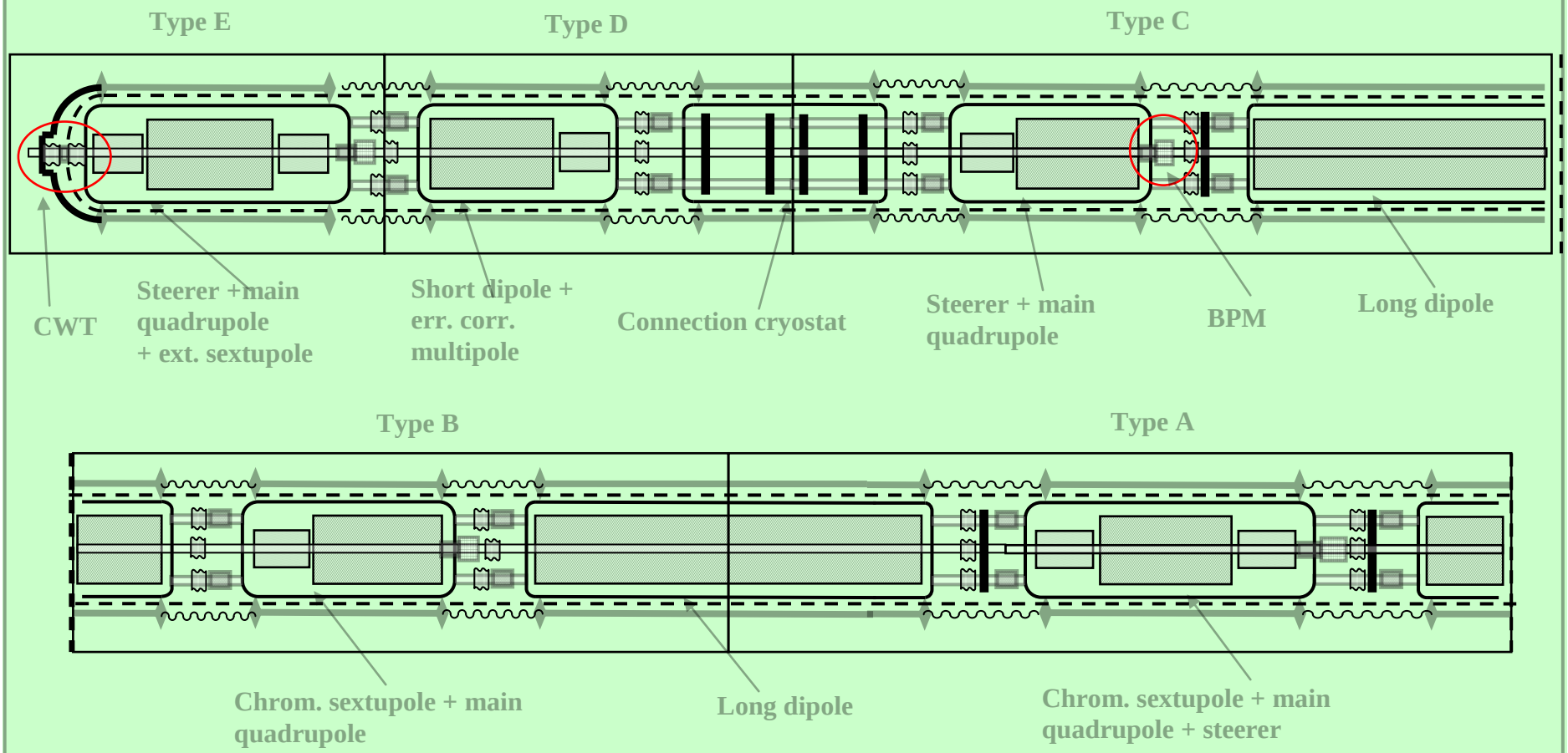

Fig. 2 Layout of the SIS300 arc and arc extremity

Dashed line = thermal shield

Magnets, cryostat, interconnections, cold-warm transitions

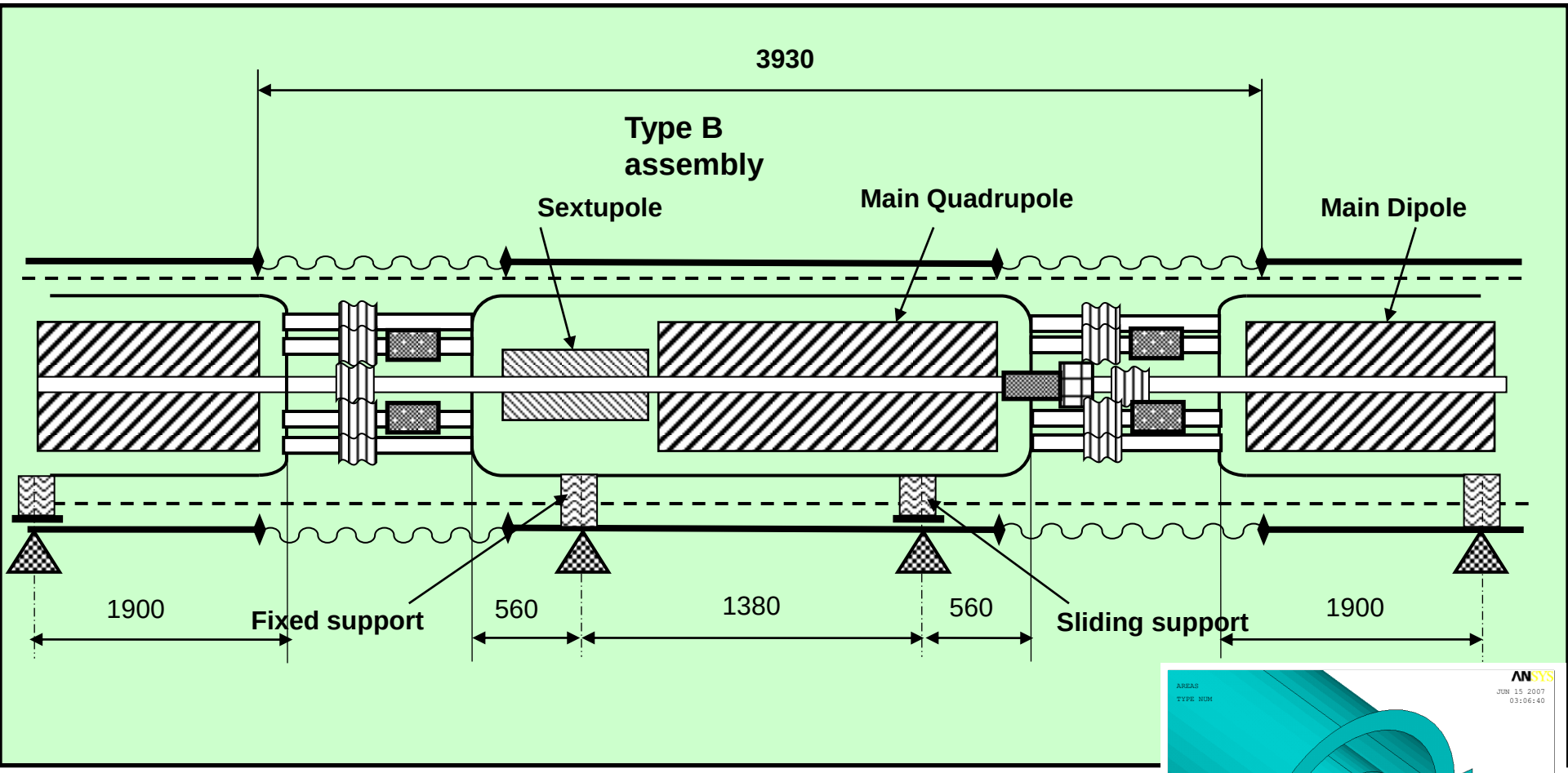

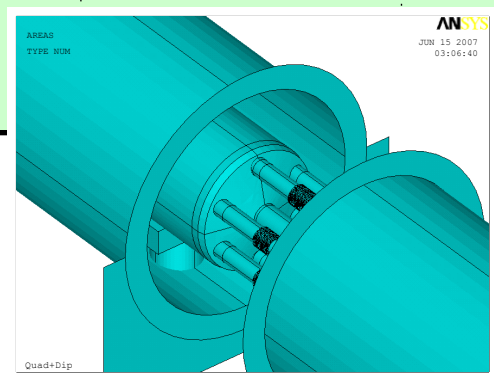

FAIR: SIS300 position of main magnets and correctors

Skoczeń, B., Wróblewski, A., Layout of principal magnetic components and interconnections in the SIS300 standard arc, Report 6/08, GSI/FAIR, 2008.

Magnets, cryostat, interconnections, cold-warm transitions

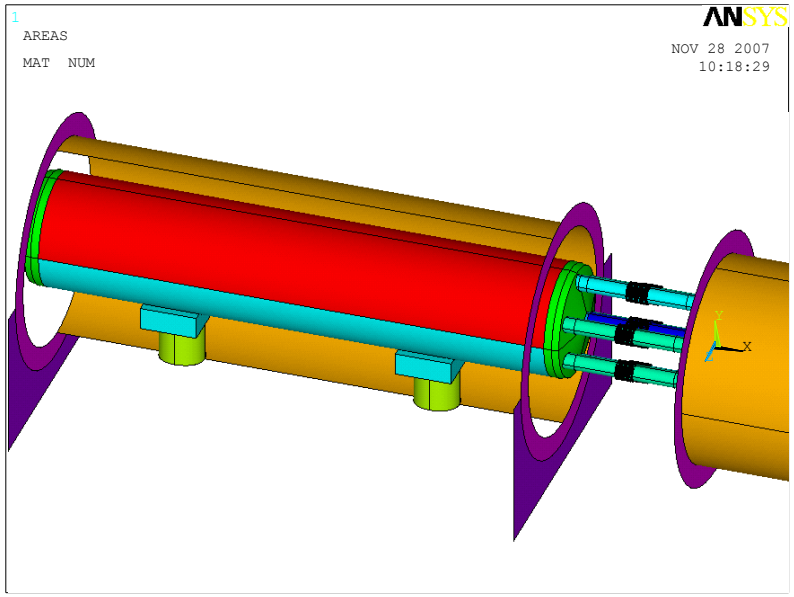

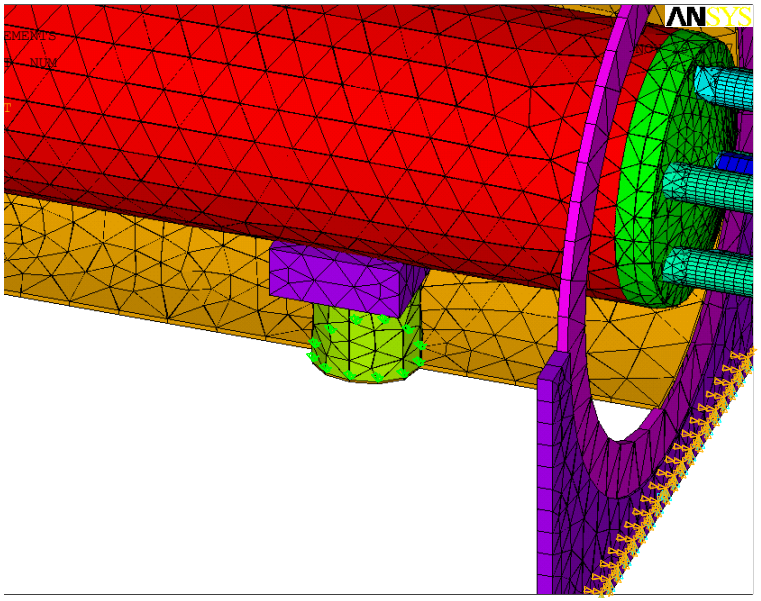

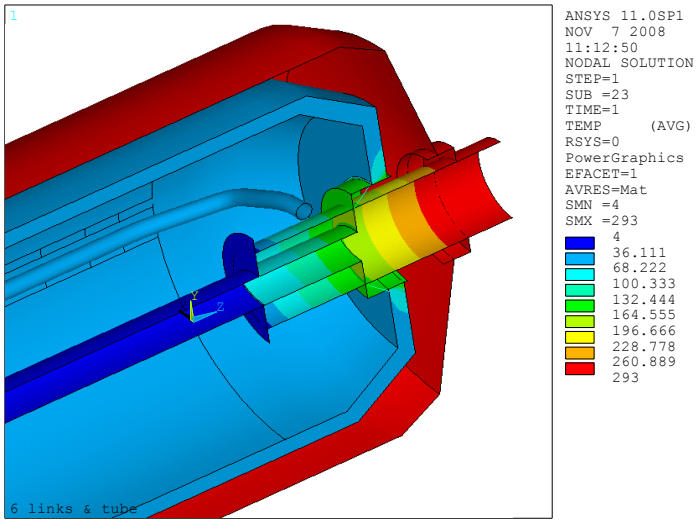

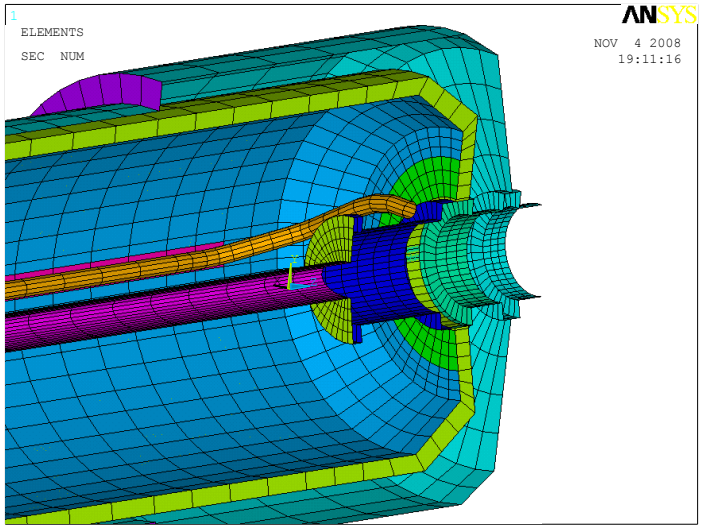

Skoczeń, B., Wróblewski, A., Standard cold-warm transition (CWT) for SIS 100/300, Report 5/08, GSI/FAIR, 2008.

Connection cryostats for SIS 300

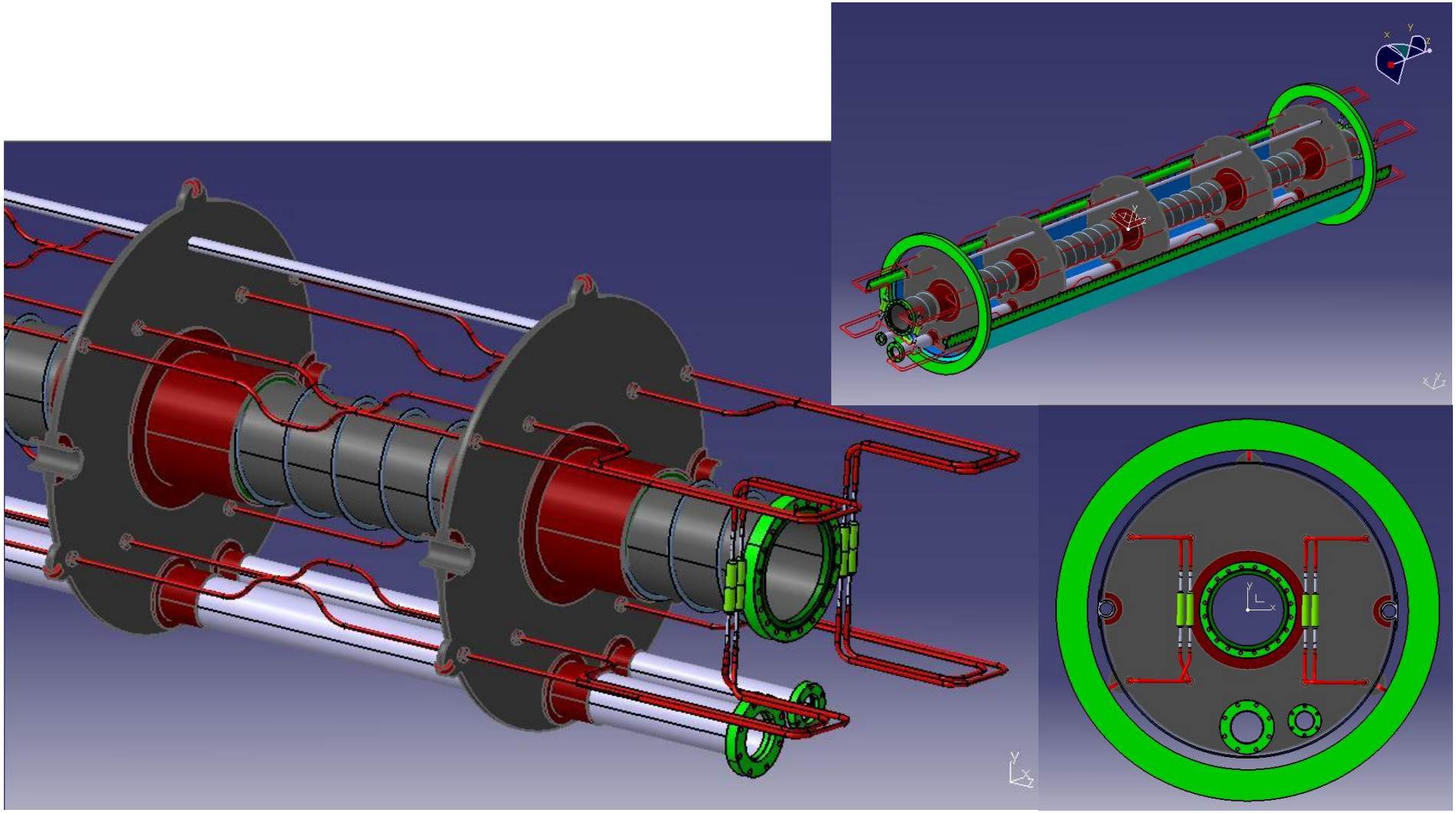

Competence: design and optimisation of accelerator systems

Sitko, M., Skoczeń, B., Marcinek, D., „Connection cryostats for SIS100/SIS300", Report 8/08, GSI/FAIR, 2008.

Outline

1. Contribution to LHC
2. Contribution to FAIR
3. Contribution to EUROν
4. Contribution to other projects
5. Fundamental research - materials for particle accelerators
6. Future contribution to Tiara

Task WP4.1:

1 Accelerator components

2 Accelerator technologies

3 Accelerator concepts

EUROnu Project

EUROnu is a European Commission FP7 Design Study entitled:

A High Intensity Neutrino Oscillation Facility in Europe

1. Science and Technology Facilities Council, UK
2. CEA, France
3. CERN, Switzerland
4. Glasgow University, UK
5. Imperial College, London, UK
6. Consejo Superior de Investigaciones Cientificas, Spain
7. Centre National de la Recherche Scientifique, France
8. Politechnika Krakowska, Poland
9. Durham University, UK
10. Istituto Nazionale di Fisica Nucleare, Italy
11. Max Planck Gesellschaft zur Fördering der Wissenschaften E.V., Germany
12. Oxford University, UK
13. Sofiiski Universitet Sveti Kliment Ohridski, Bulgaria
14. Warwick University, UK
15. Universite Catholique de Louvain, Belgium

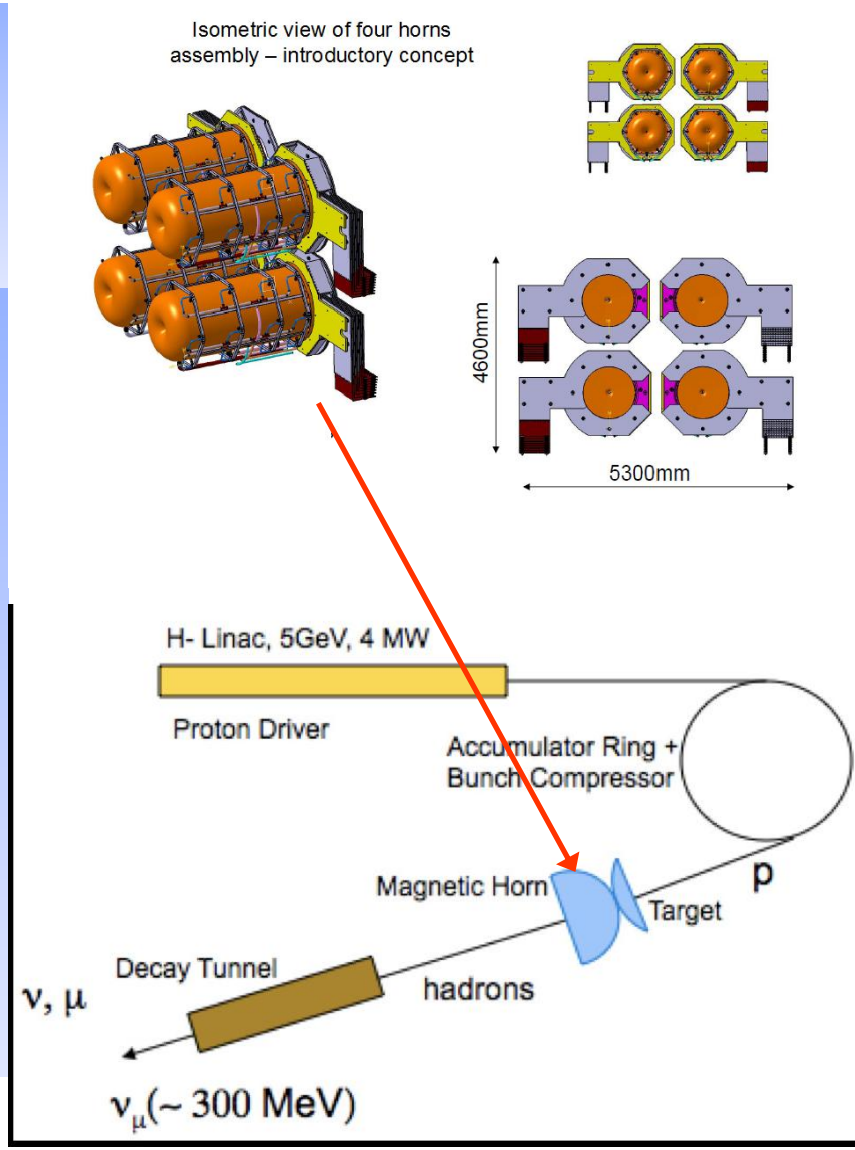

C. Bobeth et al. The target and horn for the SPL-based Super Beam: preliminary design report". EuroNu WP2 Note 11-01, February 2011.

EUROnu Project – design of horns

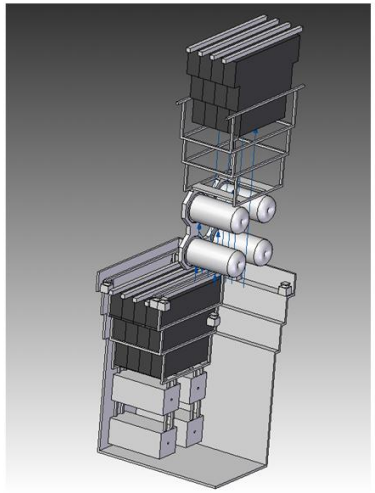

(a)

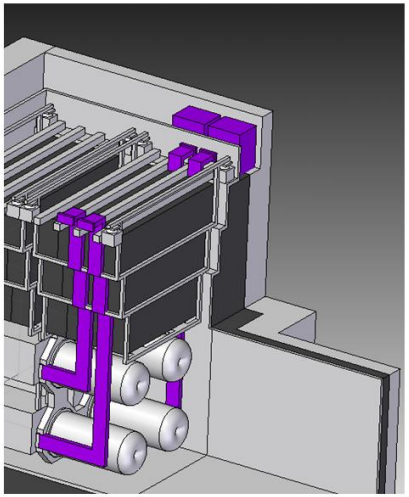

(b)

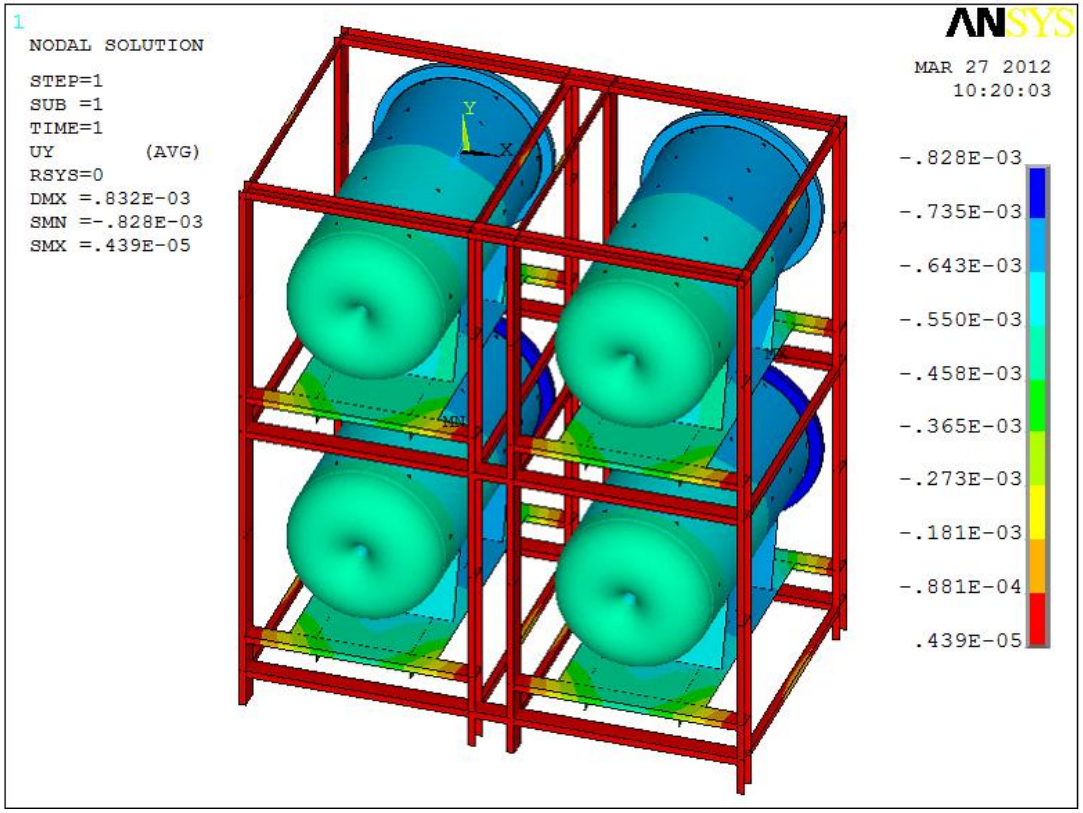

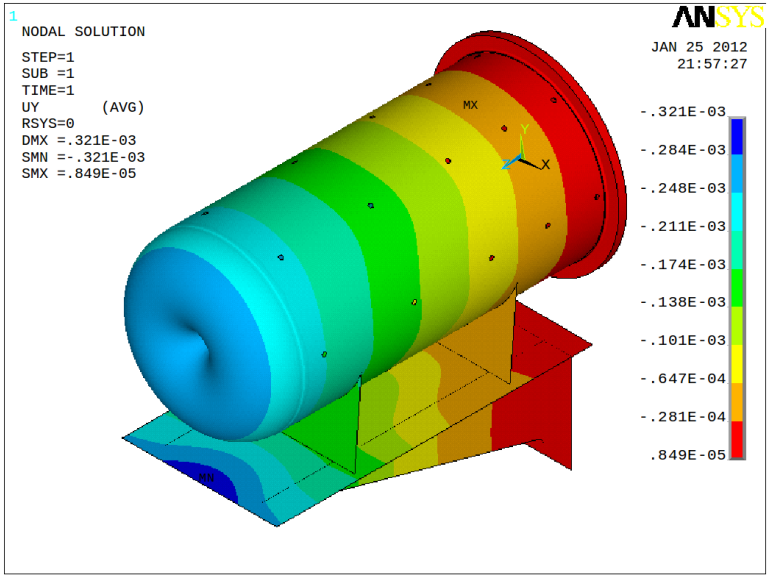

Quasistatic and dynamic analysis of set of 4 horns suspended on shielding

J. Bielski, P. Cupiał, M. S. Kozień, Łacny, B. Skoczeń, B. Szybiński, A. Ustrzycka, A. Wróblewski, Superbeam single horn thermo-mechanical and multiphysics study and integration of 4-horns, EUROnu Report, 2012-001, Jan. 2012.

EUROnu Project – irradiation induced damage

TIARA 2012

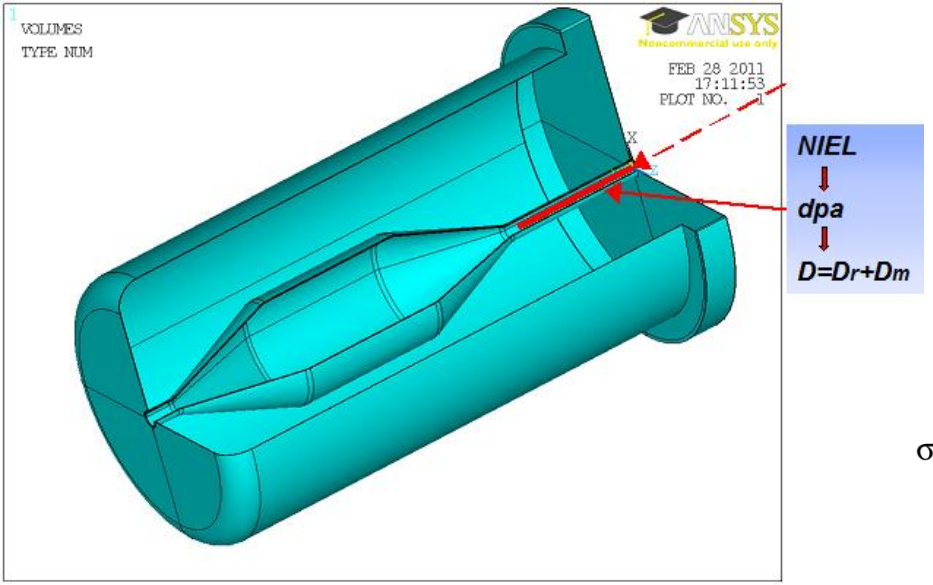

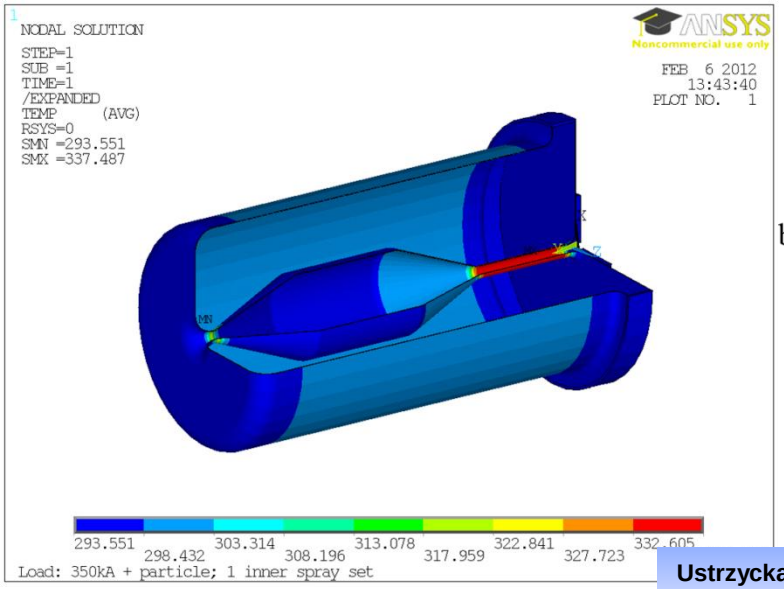

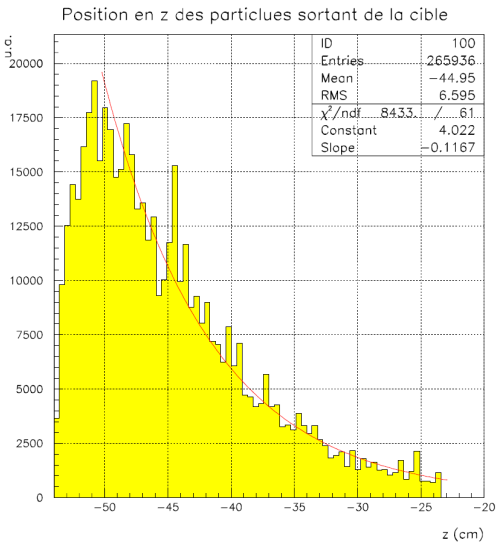

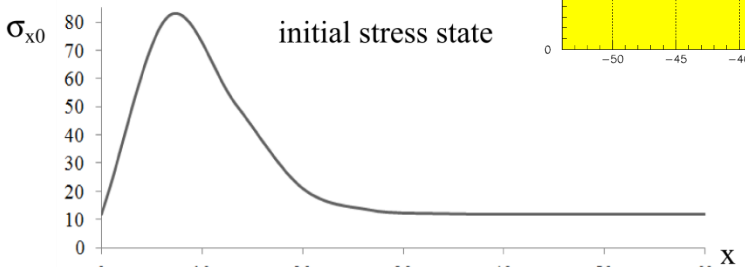

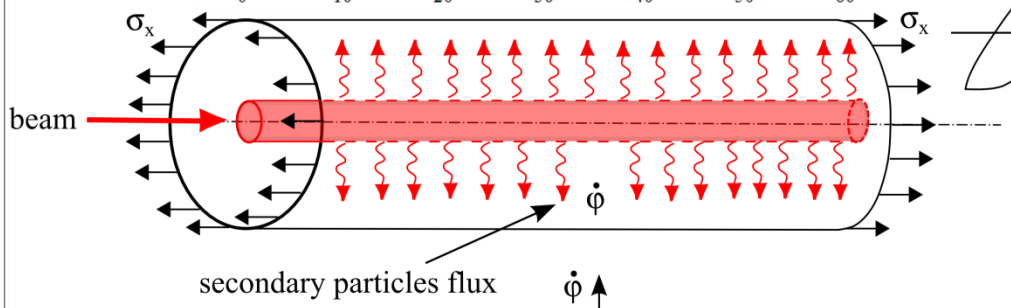

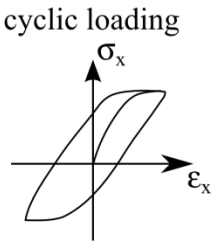

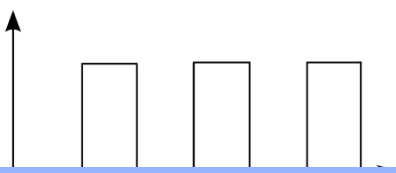

Ustrzycka, A., Skoczeń, B., Estimation of horn lifetime in the light of degradation of material properties due to irradiation and mechanical loads, Physical Review Special Topics Accelerators and Beams, review, 2012

Example 3: Horn

Pulsed current & irradiation

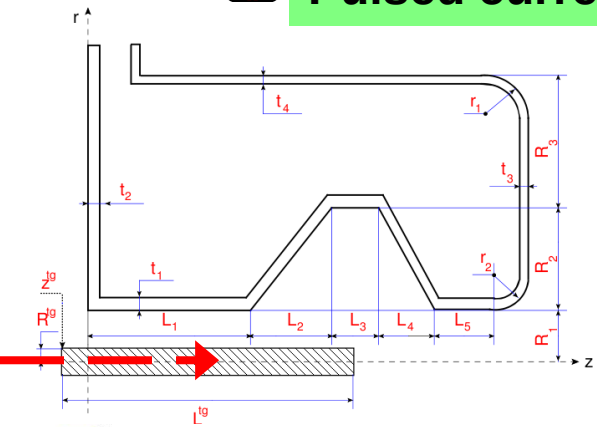

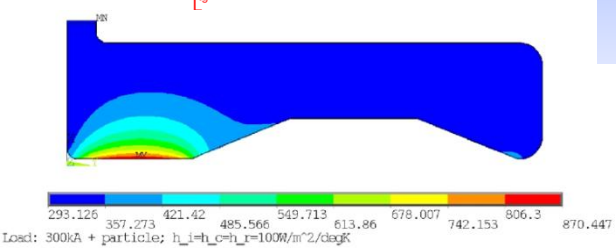

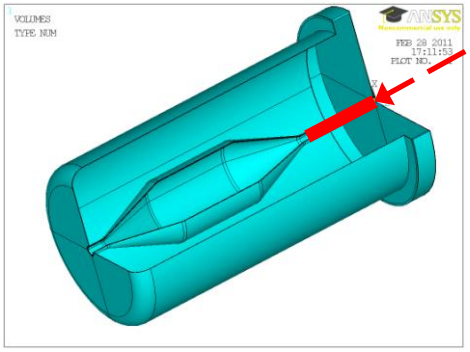

Quasi-static and cyclic loads

Quasi-static and cyclic loads

i=i+1 pulse

TIARA 2012

$$NIEL^i \Rightarrow dpa^i$$

$$D_{r0}^i = q_A \pi r_{c0}^2$$

irradiation

$$dr_c = r_c \alpha_r \exp\left(\frac{3\sigma_m}{2\sigma_{eq}}\right) dp$$

$$dD_{rm}^i = q_A dA_{rm} = q_A 2\pi r_{c0} dr_c$$

$$D_r^i = D_{r0}^i + \int_0^{\hat{p}} dD_{rm}^i$$

$$\dot{D}_m^i = \left(\frac{Y}{S}\right)^s \dot{p} H(p - p_D)$$

$$D^i = D_m^i + D_r^i \Rightarrow D = \sum_{i=1}^{N} D^i$$

Competence: analysis of materials and structures subjected to irradiation

Outline

1. Contribution to LHC
2. Contribution to FAIR
3. Contribution to EUROν
4. Contribution to other projects (PS, CLIC)
5. Fundamental research - materials for particle accelerators
6. Future contribution to Tiara

Task WP4.1:

1 Accelerator components

2 Accelerator technologies

3 Accelerator concepts

Electromagnetic FE analysis of the PS main magnetic unit

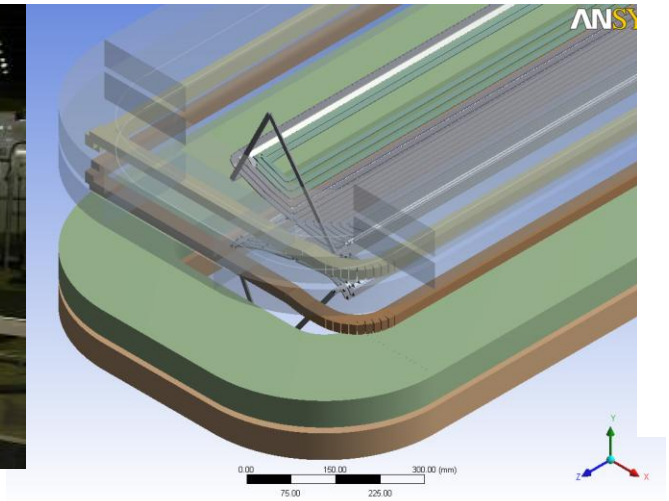

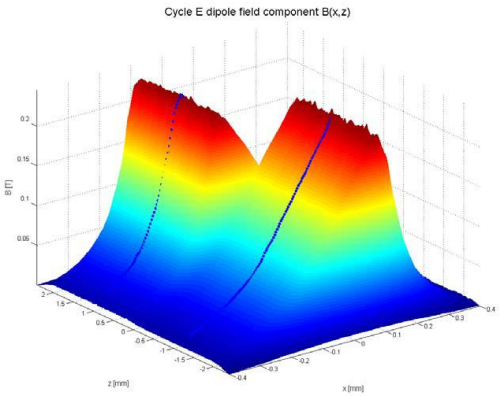

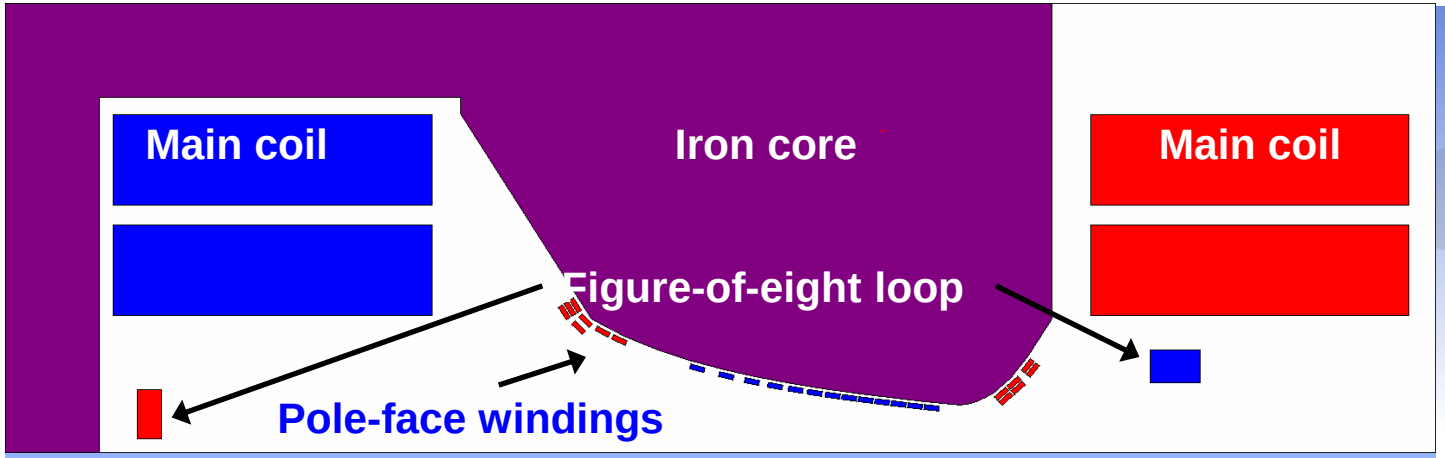

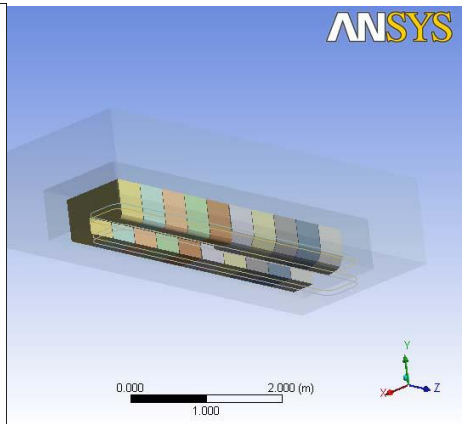

Juchno, M., Skoczeń B. (supervisor), Electromagnetic FEM analysis of the CERN Proton Synchrotron main magnetic unit, CERN-THESIS-2009-175 - Cracow : Institute of Applied Mechanics, 2009.

Electromagnetic FE analysis of the PS main magnetic unit

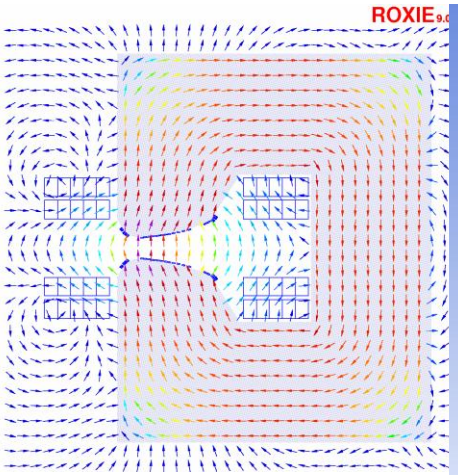

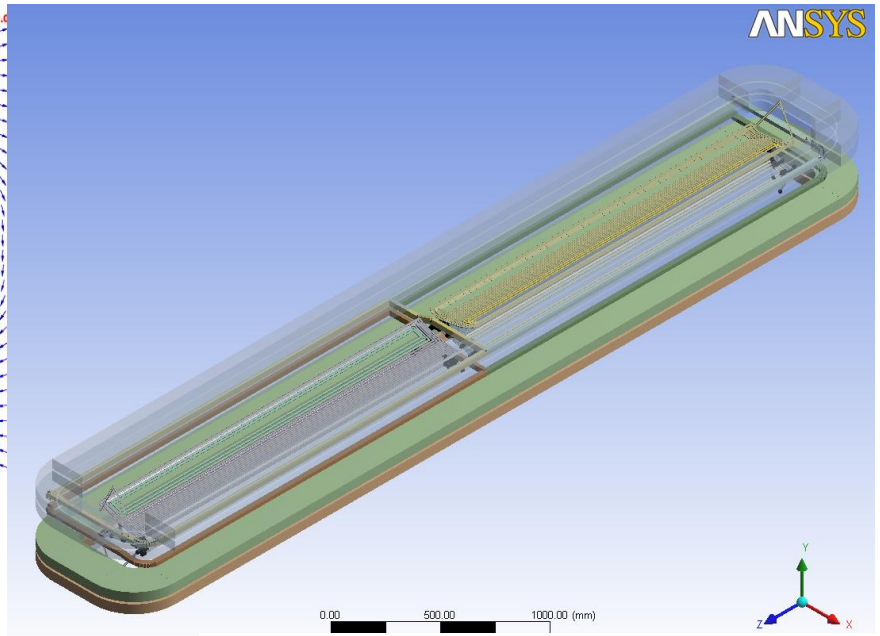

Cycle E dipole field component B(x,z)

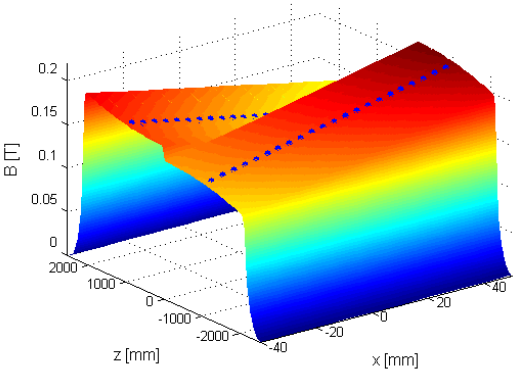

Cycle E quadrupolar field component G(x,z)

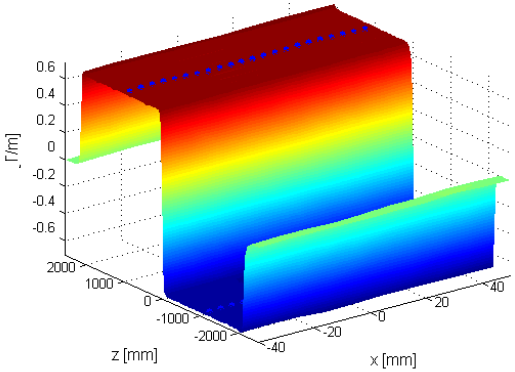

Cycle LHC dipole field compo

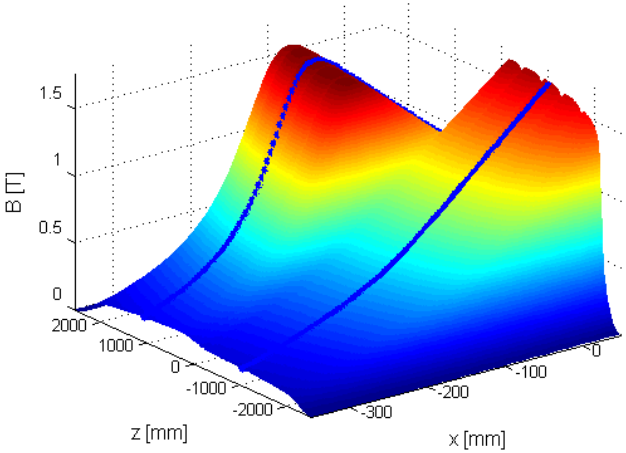

Cycle LHC quadrupolar field component G(x,z)

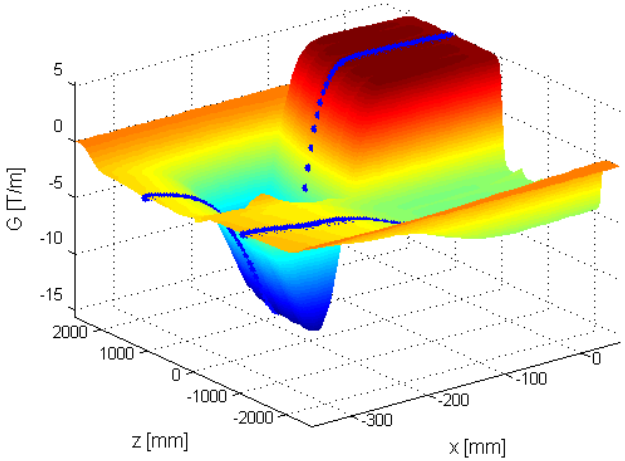

UHV all-metal seals subjected to radiation and inelastic deformation

Lutkiewicz, P., Skoczeń, B. (supervisor), The tightness conditions of UHV all-metal seals subjected to the radiation and inelastic deformation, CERN-THESIS-2009-197.

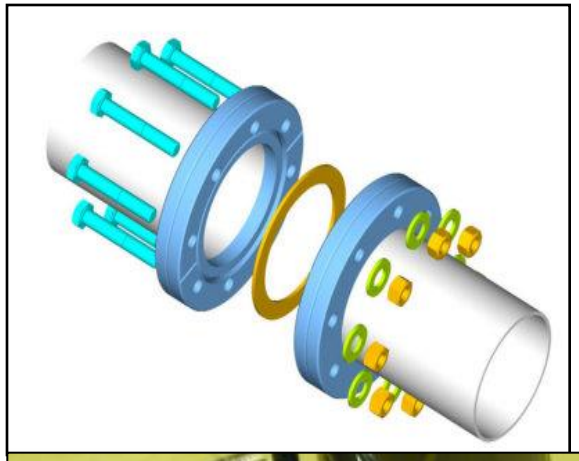

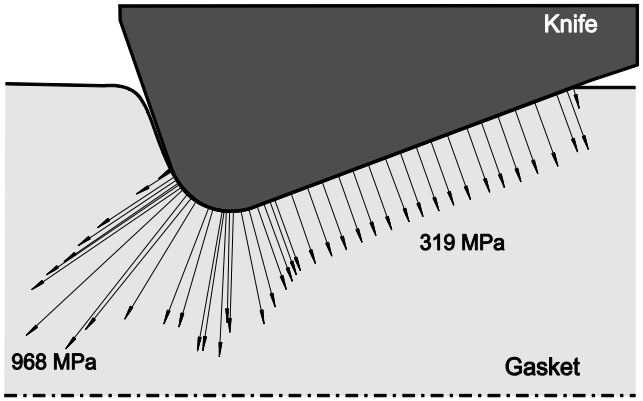

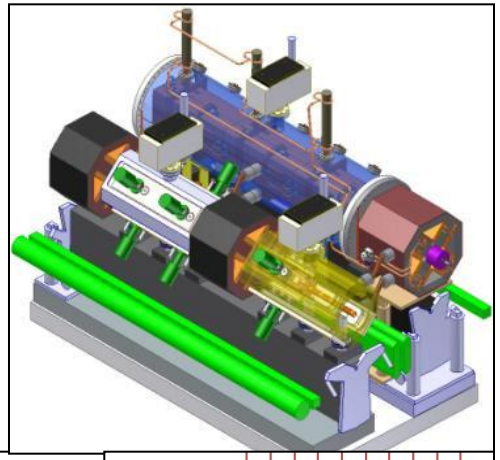

Type ConFlat joint

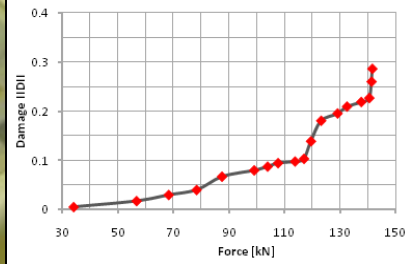

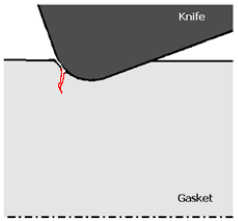

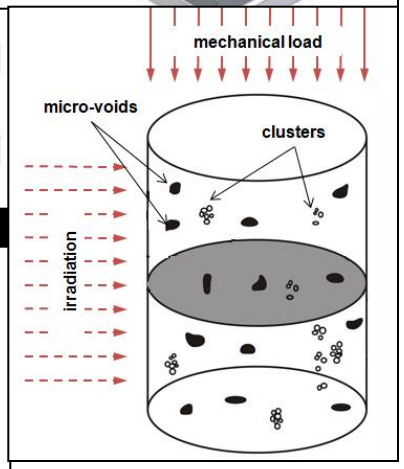

Lutkiewicz, P., Skoczeń, B., Garion, C., “Micro-damage propagation in ultra-high vacuum seals”, Int. Journal of Pressure Vessels and Piping, 87, 4, pp. 187-196, 2010.

UHV all-metal seals subjected to radiation and inelastic deformation

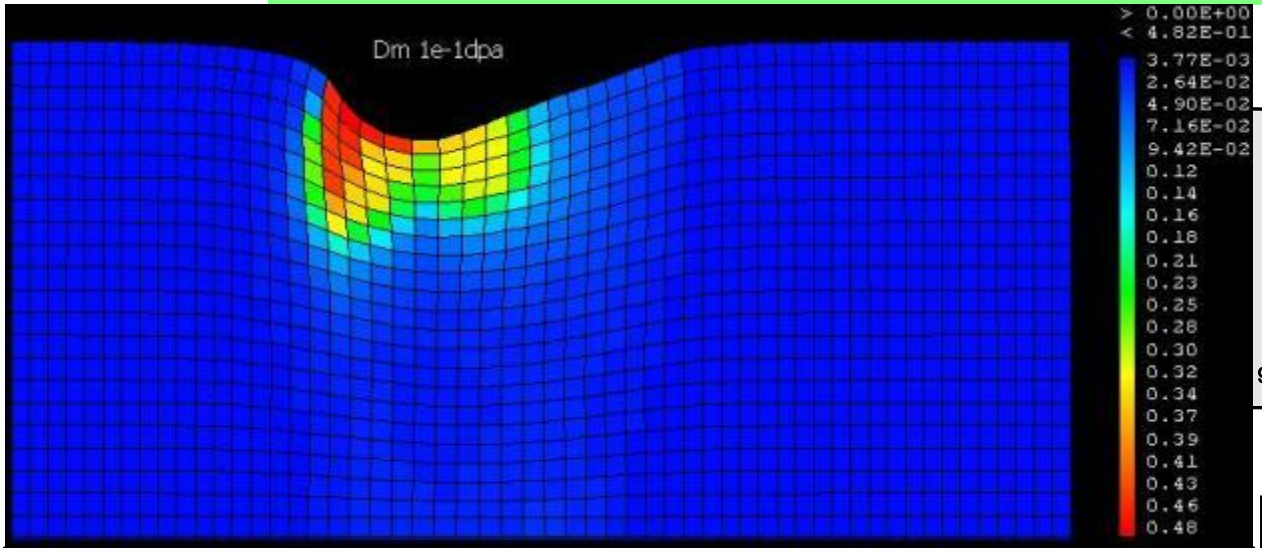

Mechanically induced micro-damage fields

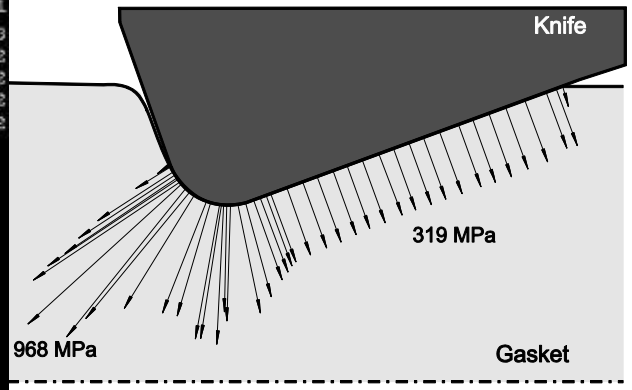

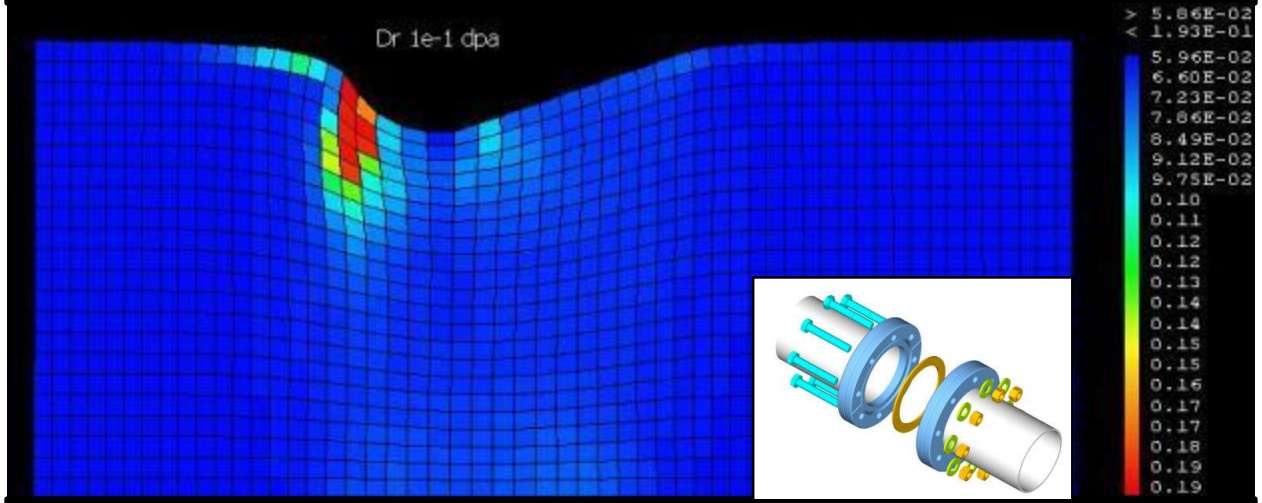

Irradiation induced micro-damage fields

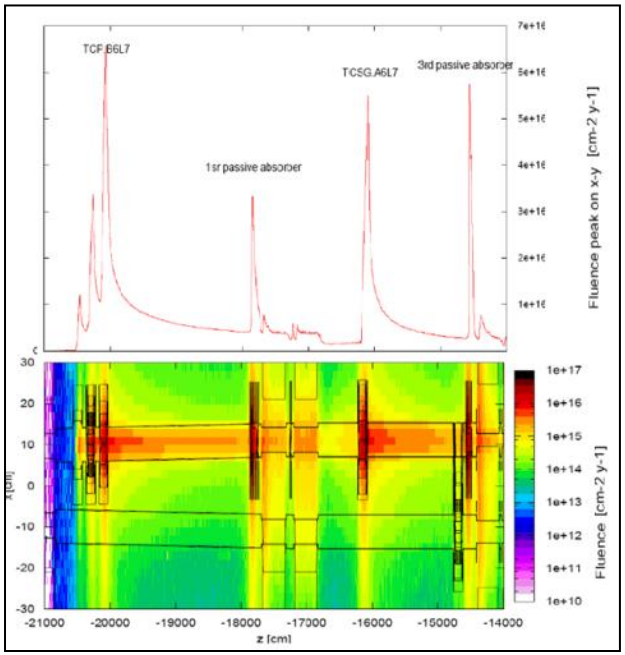

Outline

1. Contribution to LHC
2. Contribution to FAIR
3. Contribution to EUROν
4. Contribution to other projects (PS, CLIC)
5. Fundamental research - materials for particle accelerators
6. Future contribution to Tiara

Task WP4.1:

1 Accelerator components

2 Accelerator technologies

3 Accelerator concepts

Experimental identification

CERN set-up

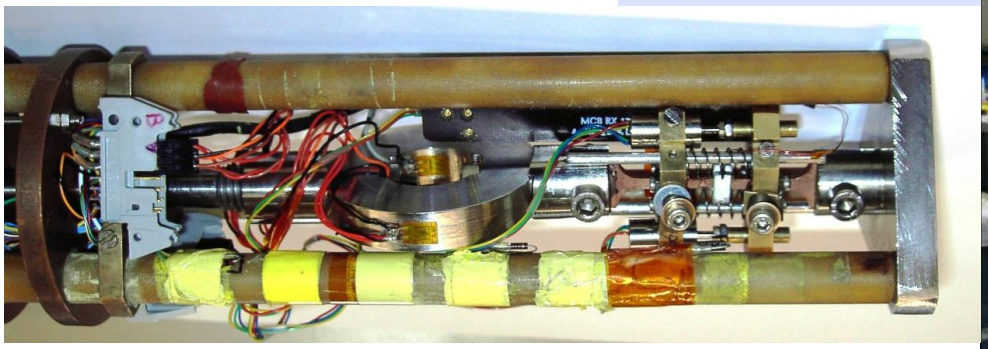

Cracow University of Technology set-up

Liquid helium
Liquid nitrogen

Record frequency:
standard: f = 20 [Hz]
high rate: f = 20[kHz]

Marcinek, D., Skoczeń, B. (supervisor), Experimental study of discontinuous plastic flow, phase transformation and micro-damage evolution in ductile materials at cryogenic temperatures, CERN-THESIS-2009-192 - Cracow : Cracow Tech. U. , 2009.

Mechanisms of plastic flow at cryogenic temperatures

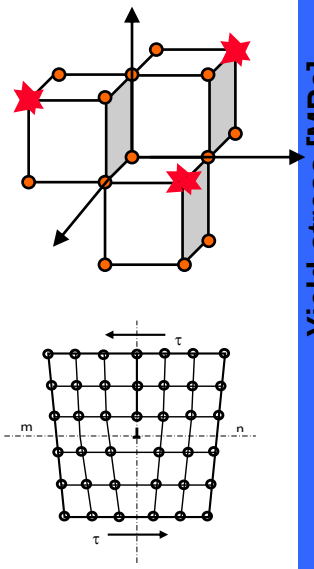

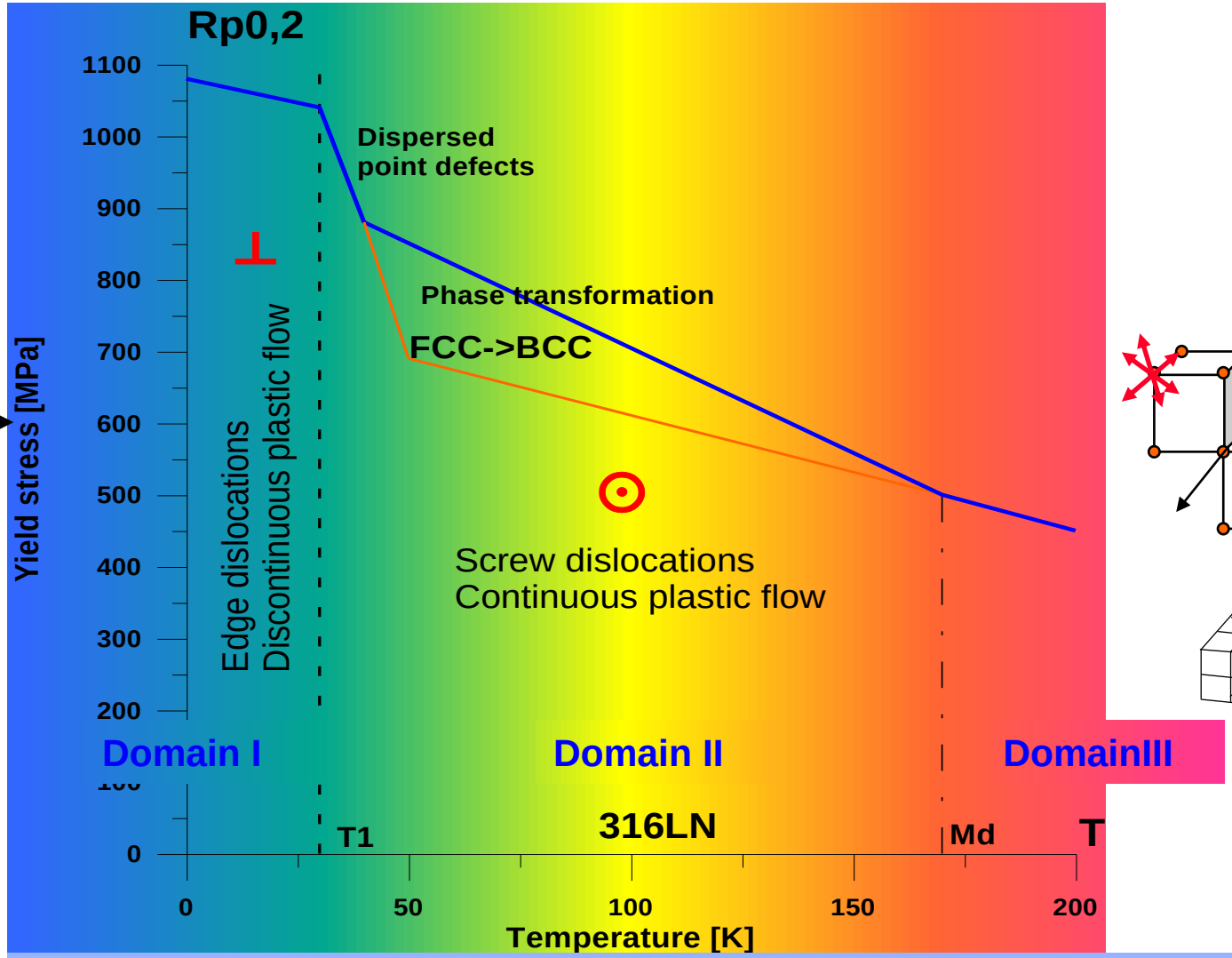

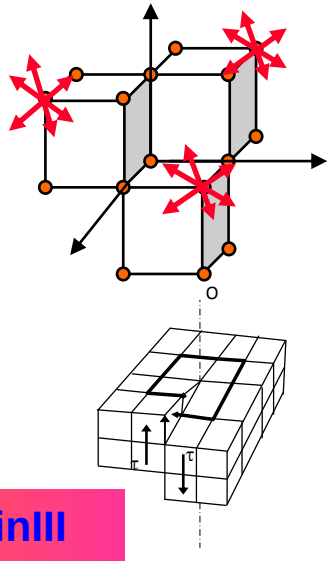

Skoczeń, B., "Constitutive model of plastic strain induced phenomena at cryogenic temperatures", Journ. Theor. Appl. Mech., No. 4, Vol. 46, pp. 949, 2008.

Discontinuous plastic flow (Domain I)

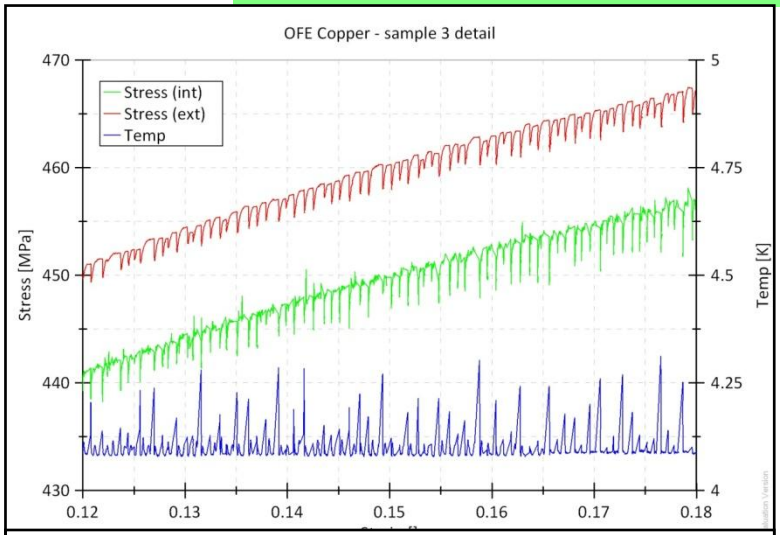

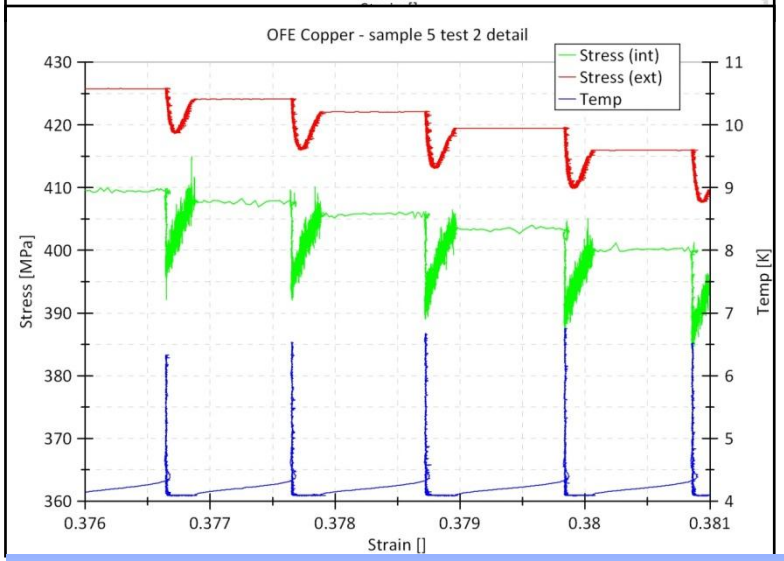

Profile similar to Portevain – Le Chatelier (PLC) phenomenon

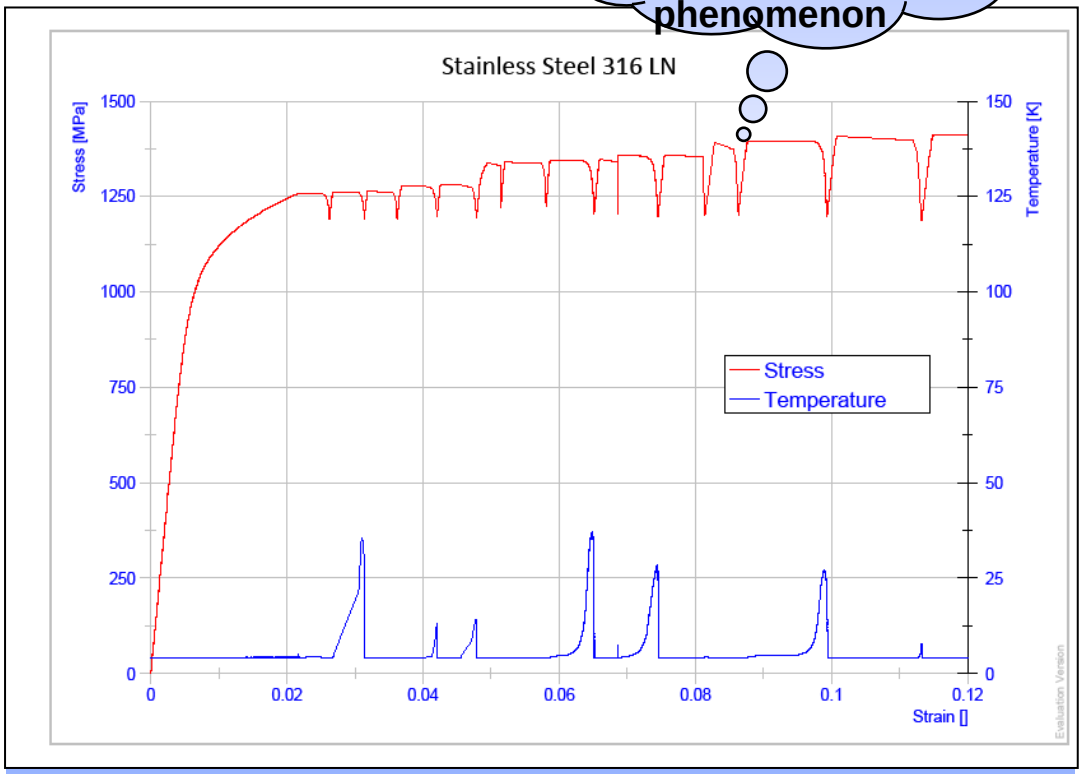

Low temperature mechanism: **massive collapse of Lomer-Cottrell locks** holding up groups of edge dislocations

Bielski, J., Skoczeń, B., Constitutive model of discontinuous plastic flow at cryogenic temperatures, in Proceedings of XXII ICTAM 2008, Adelaide, Australia, eds. J. Denier, M. Finn, T. Mattner, (ISBN 978-0-9805142-1-6), (2008).

Numerical versus experimental results

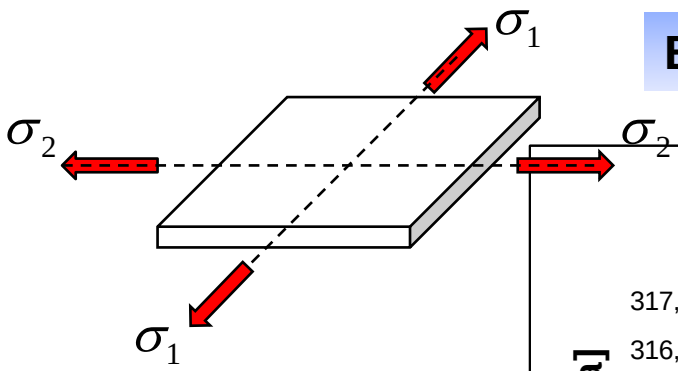

Biaxial strain rate controlled process

$$\dot{\varepsilon}_2 = 0.1 \cdot \dot{\varepsilon}_1$$

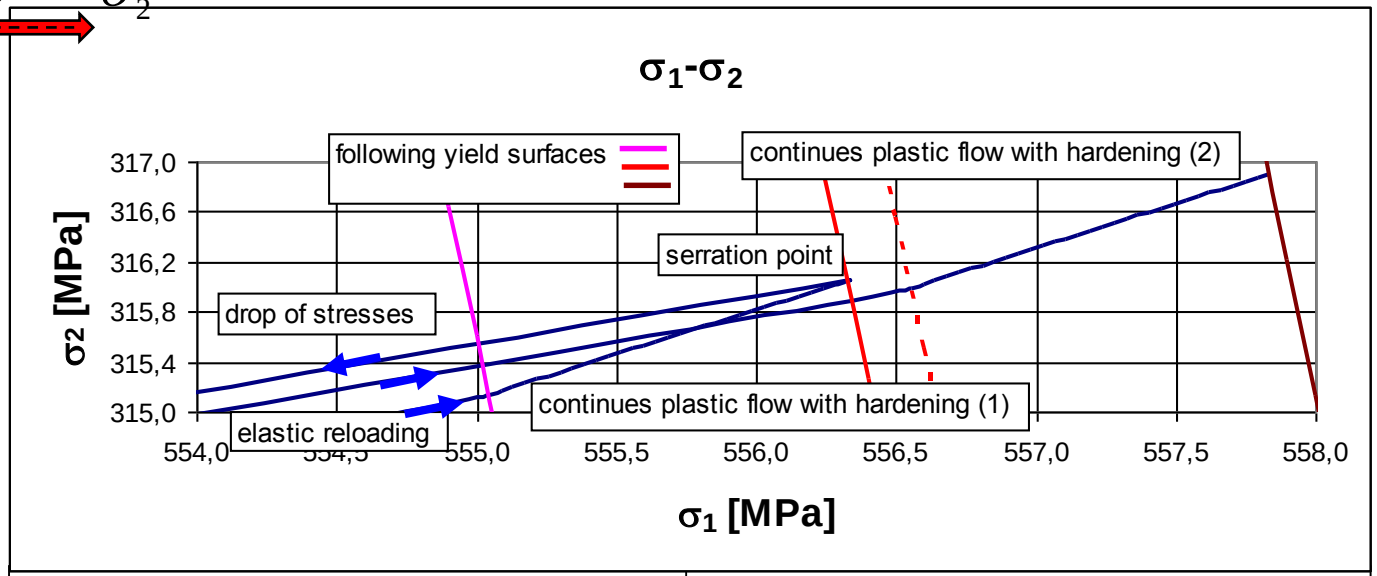

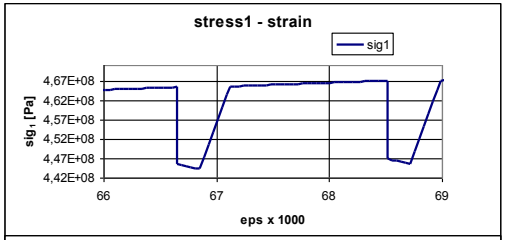

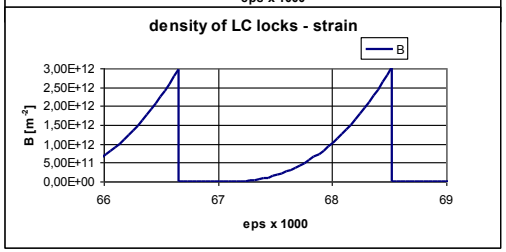

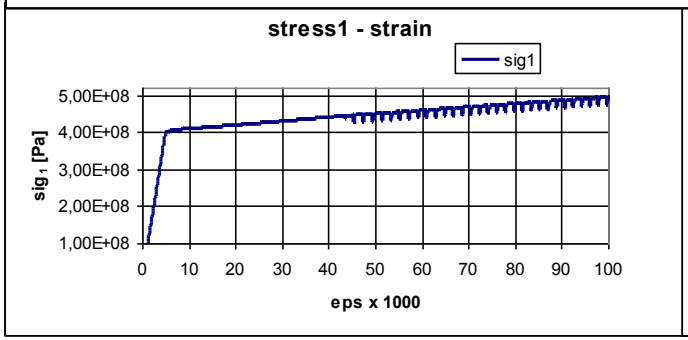

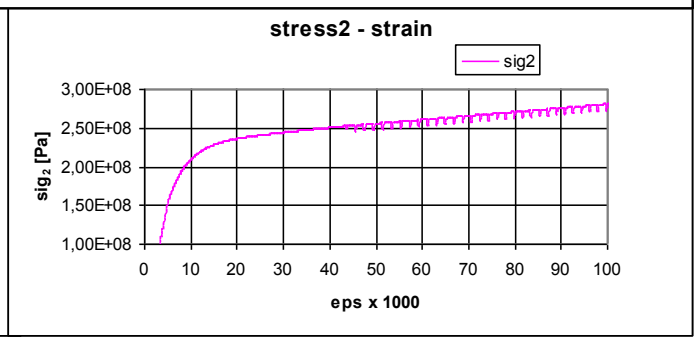

Skoczeń, B., Bielski, J., Sgobba, S., Marcinek, D., „Constitutive model of discontinuous plastic flow at cryogenic temperatures", Int. Journal of Plasticity, 26, 12, pp. 1659-1679, 2010.

Sources of energy dissipation in superconducting magnets

Structural

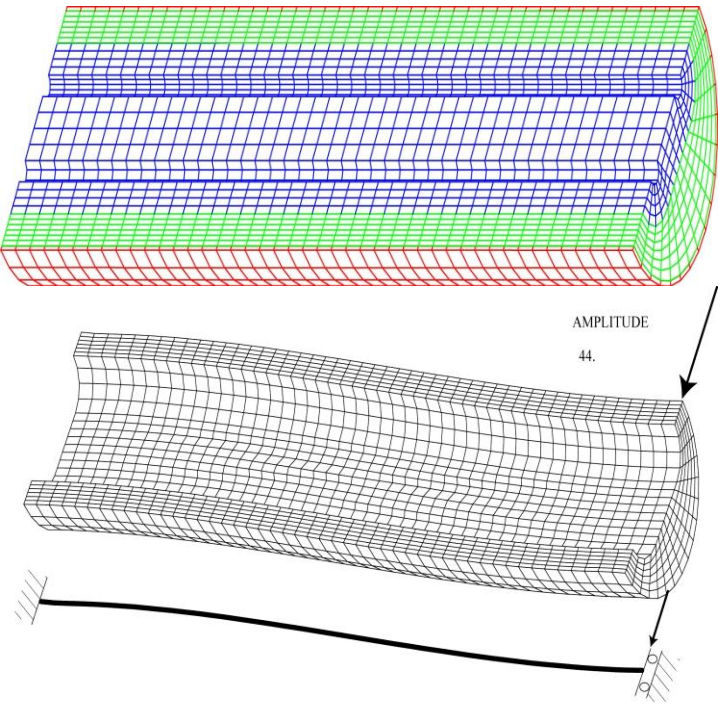

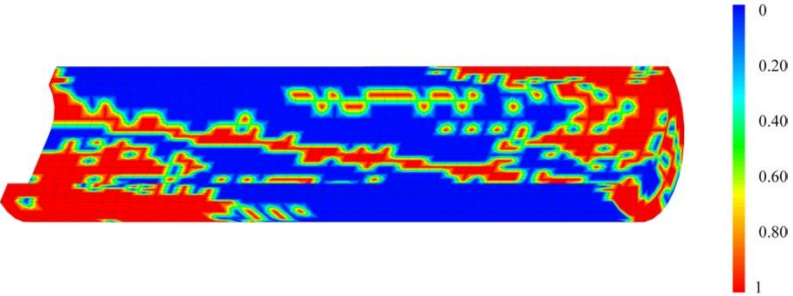

Material

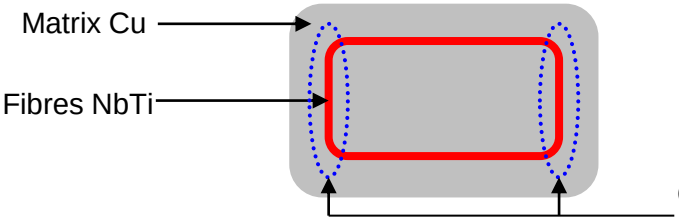

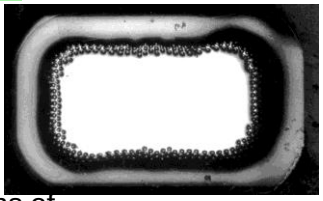

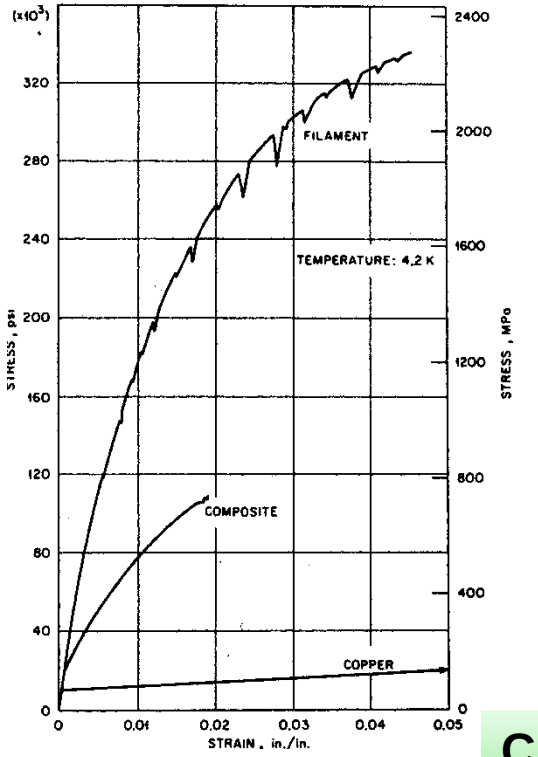

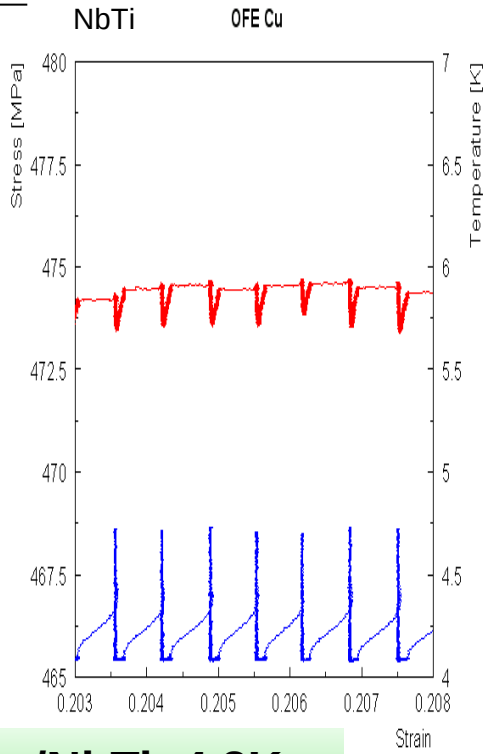

Cu/NbTi; 4.2K

Outline

1. Contribution to LHC
2. Contribution to FAIR
3. Contribution to EUROν
4. Contribution to other projects (PS, CLIC)
5. Fundamental research - materials for particle accelerators
6. Future contribution to Tiara

Task WP4.1:

1 Accelerator components

2 Accelerator technologies

3 Accelerator concepts

Future contribution of CUT to Tiara

Task 1

Degradation of material properties and lifetime prediction of accelerator and detector components under irradiation (primary and secondary particles flux) and mechanical loads:

- **Experiments at wide range of temperatures, including cryogenic conditions and complex stress state**
- **Building relevant constitutive models oriented towards evolution of micro-damage**
- **Application to accelerator and detector components exposed to irradiation (particles)**

Future contribution of CUT to Tiara

Task 2

Design and optimisation of accelerator and detector components including:

- **Design of superconducting magnets (main units and correctors), cryostats and superconducting links,**

- **Optimisation of interconnnections including compensation system (expansion joints), UHV system, powering and thermal shielding,**

- **Design and optimisation of carrying structures of detectors, vacuum chambers, components of UHV and RF systems.**