K_L and Muon Trigger in the Belle II Experiment

Leo Piilonen, Virginia Tech
Yoshihito Iwasaki, KEK

on behalf of the Belle II Collaboration

CHEP 2013, Amsterdam

Belle II Detector

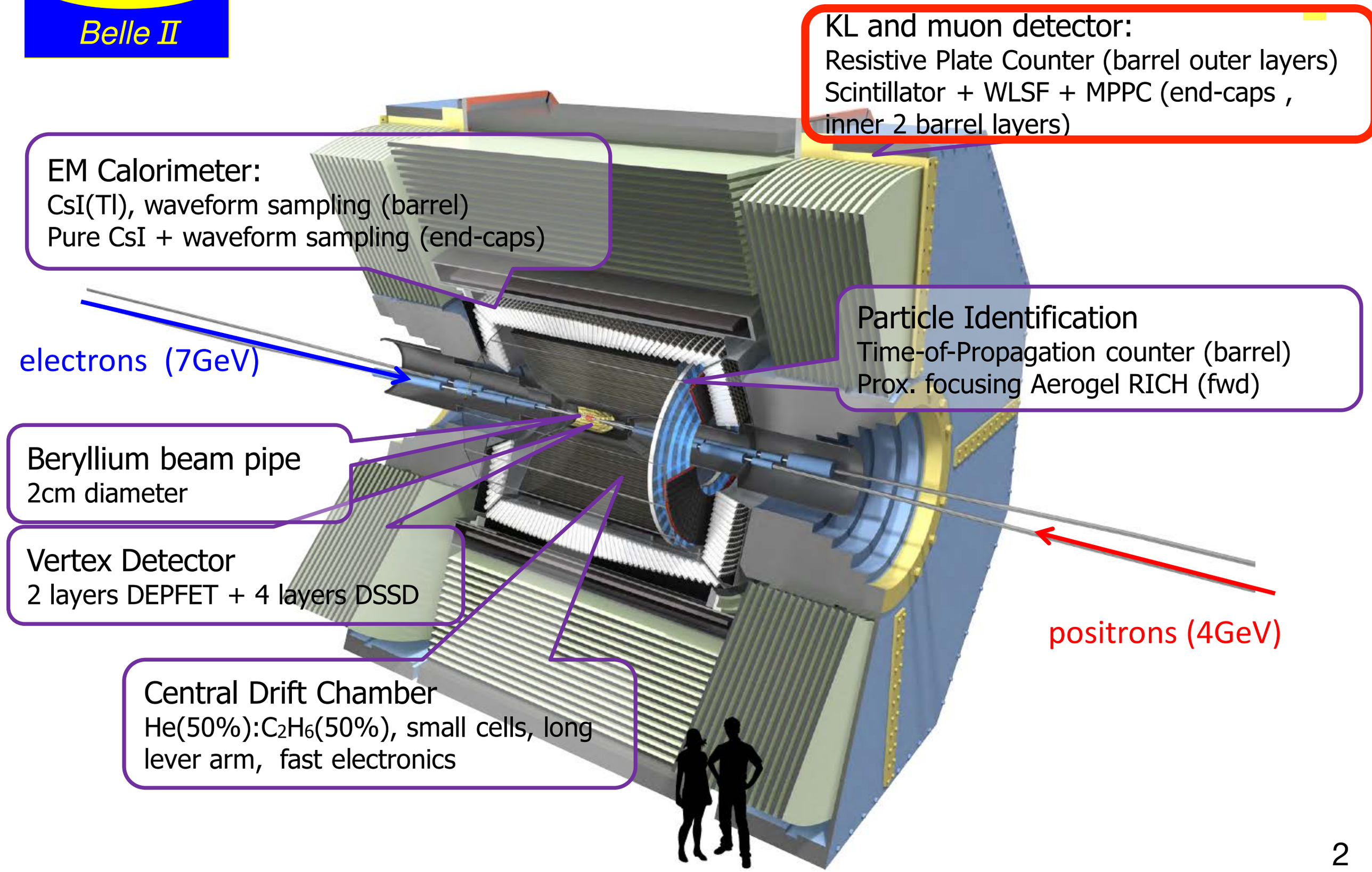

Vital statistics at the design luminosity of $L = 8 \times 10^{34}\ \mathrm{cm}^{-2}\mathrm{s}^{-1}$

- ✓ Beam collision frequency ~ 508 MHz
  - ⇒ bunch separation ~ 2 ns
- ✓ Separation between physics events ~ 25000 bunches
  - ~ 50 μs
- ✓ Good physics rate ~ 20 kHz *(see next slide)*
- ✓ L1 trigger peak rate ~ 30kHz *(not much junk!)*
- ✓ L1 latency = 5 μs
- ✓ Minimum time between triggers ~ 2 ns
- ✓ Data reduction: 80 TByte/s → 60 GByte/s
- ✓ L1 efficiency for $\Upsilon(4S)$ events ~ 100%

Cross Sections and Level 1 Trigger rate at the design luminosity of L = 8 x 10^{34} $cm^{-2}s^{-1}$

IEEE Trans Nucl Sci 58, 1807 (2011)

Physics Process	Cross Section (nb)	Rate (Hz)
$\Upsilon(4S) \to B\bar{B}$	1.2	960
$e^+e^- \to$ continuum	2.8	2200
$e^+e^- \to \mu^+\mu^-$	0.8	640
$e^+e^- \to \tau^+\tau^-$	0.8	640
Bhabha ($\theta_{\rm lab} \geq 17°$)	44	350 [a]
$\gamma\gamma$ ($\theta_{\rm lab} \geq 17°$)	2.4	19 [b]
two-photon processes [b]	~80	~15000
Total	~130	~20000

[a] The rate is prescaled by a factor of 100.

[b] $\theta_{\rm lab} \geq 17°$, $p_t \geq 0.1$ GeV/c

Level 1 Trigger inputs from detector

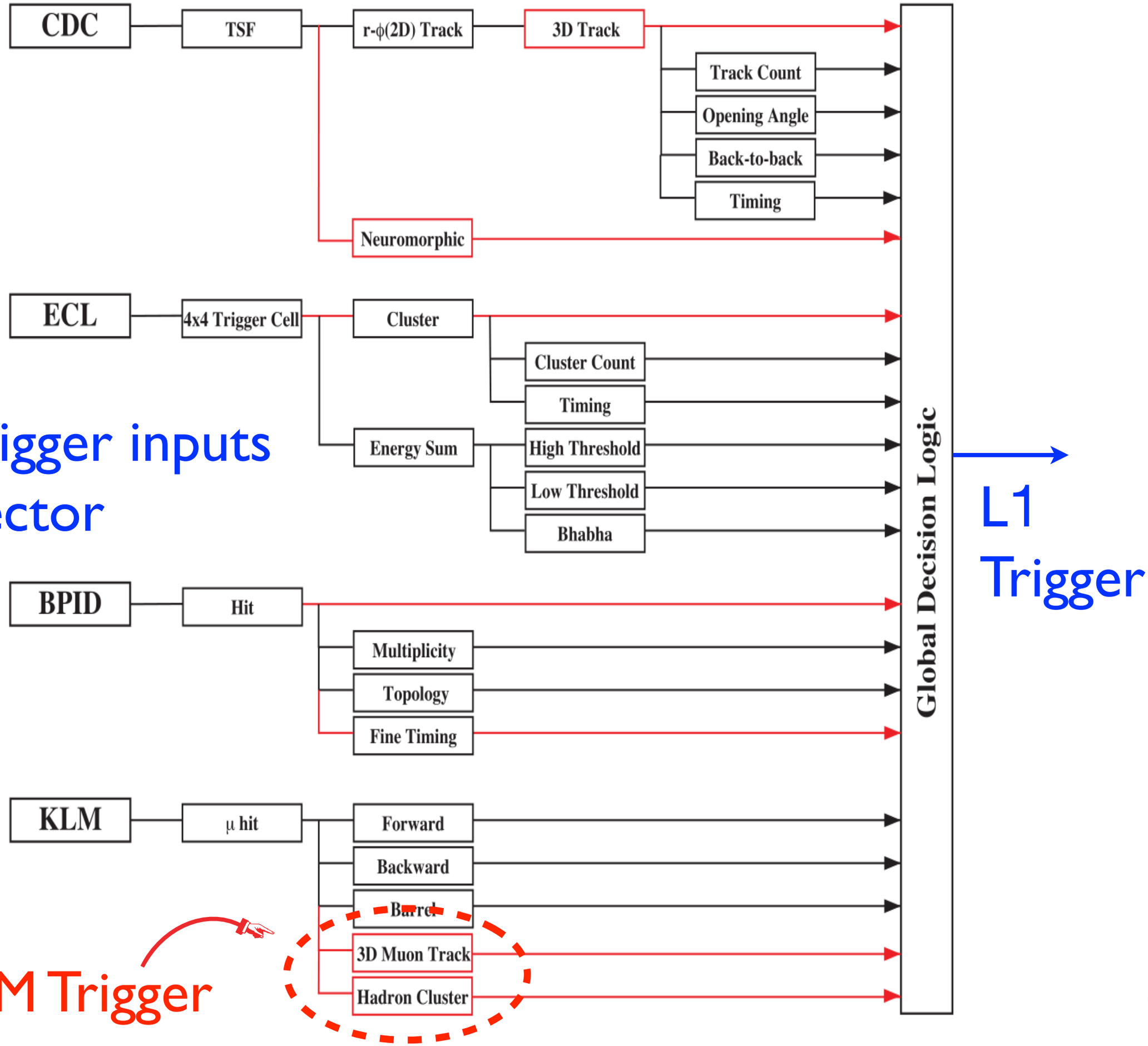

KLM Trigger

Belle II K_L–Muon (KLM) Detector

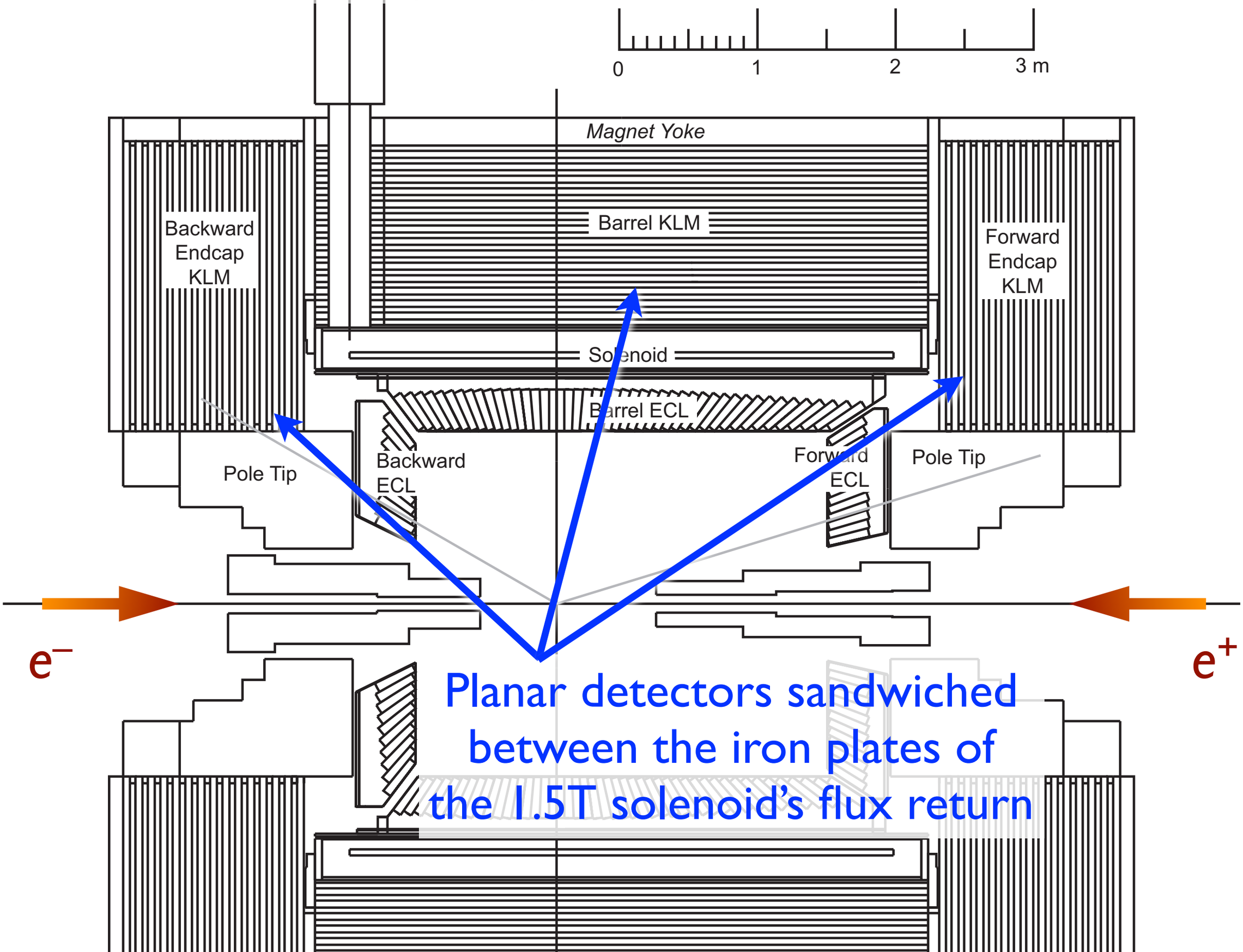

Trigger on K_L mesons and muons (≈1 per event)

$B^0 \rightarrow J/\psi\, K_L$ event

$\hookrightarrow \mu^+ \mu^-$

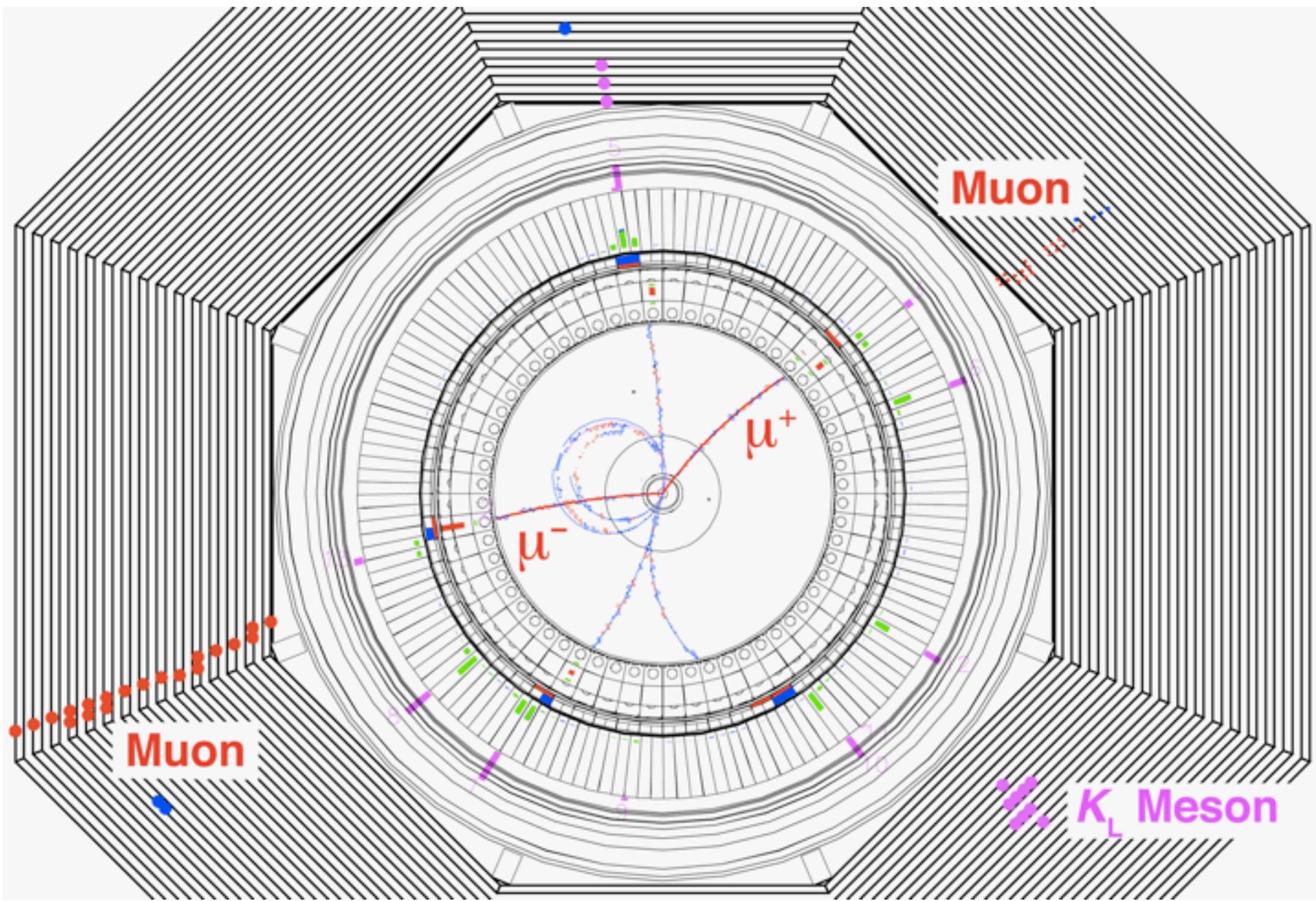

Barrel K_L–Muon (KLM) data flow for RPCs

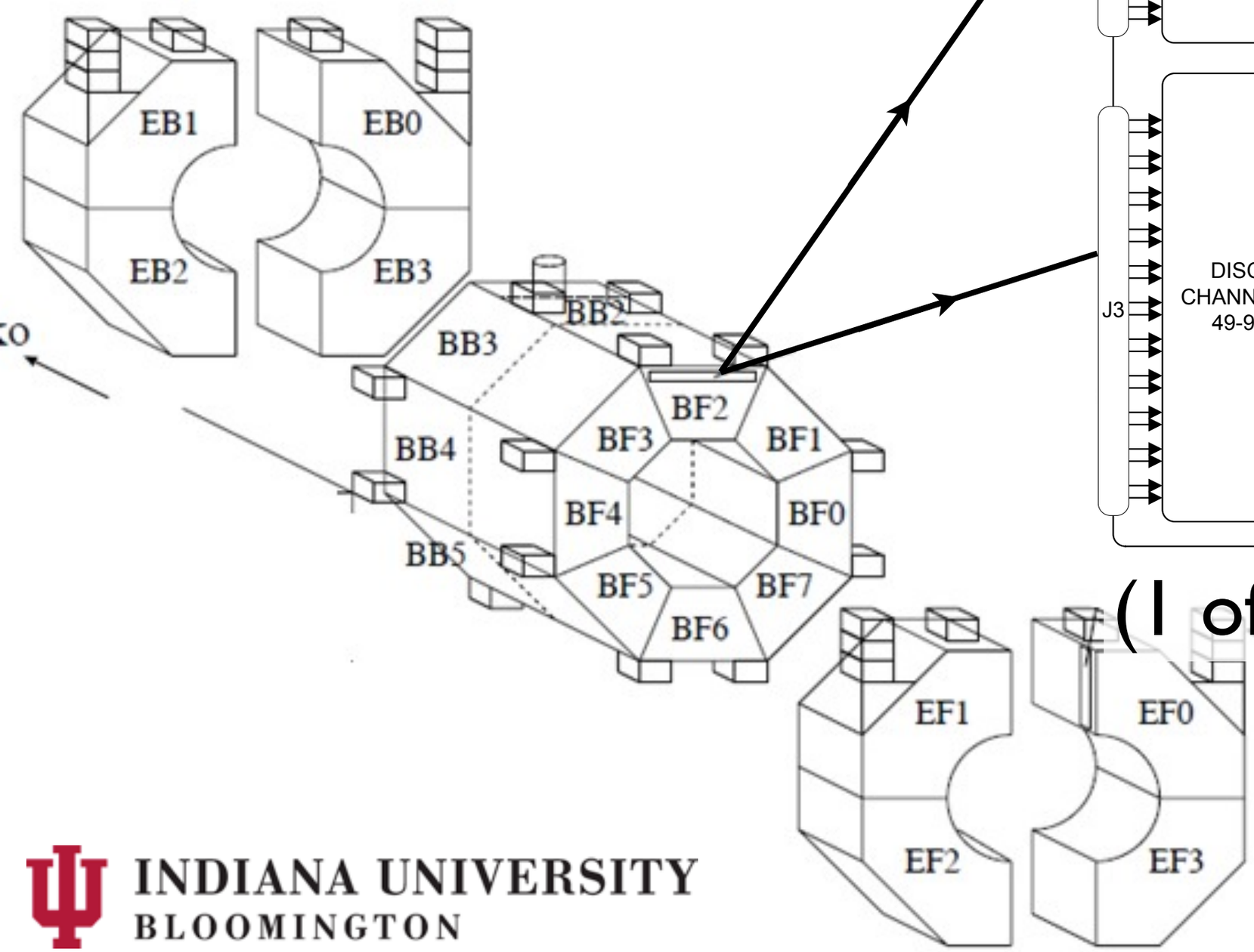

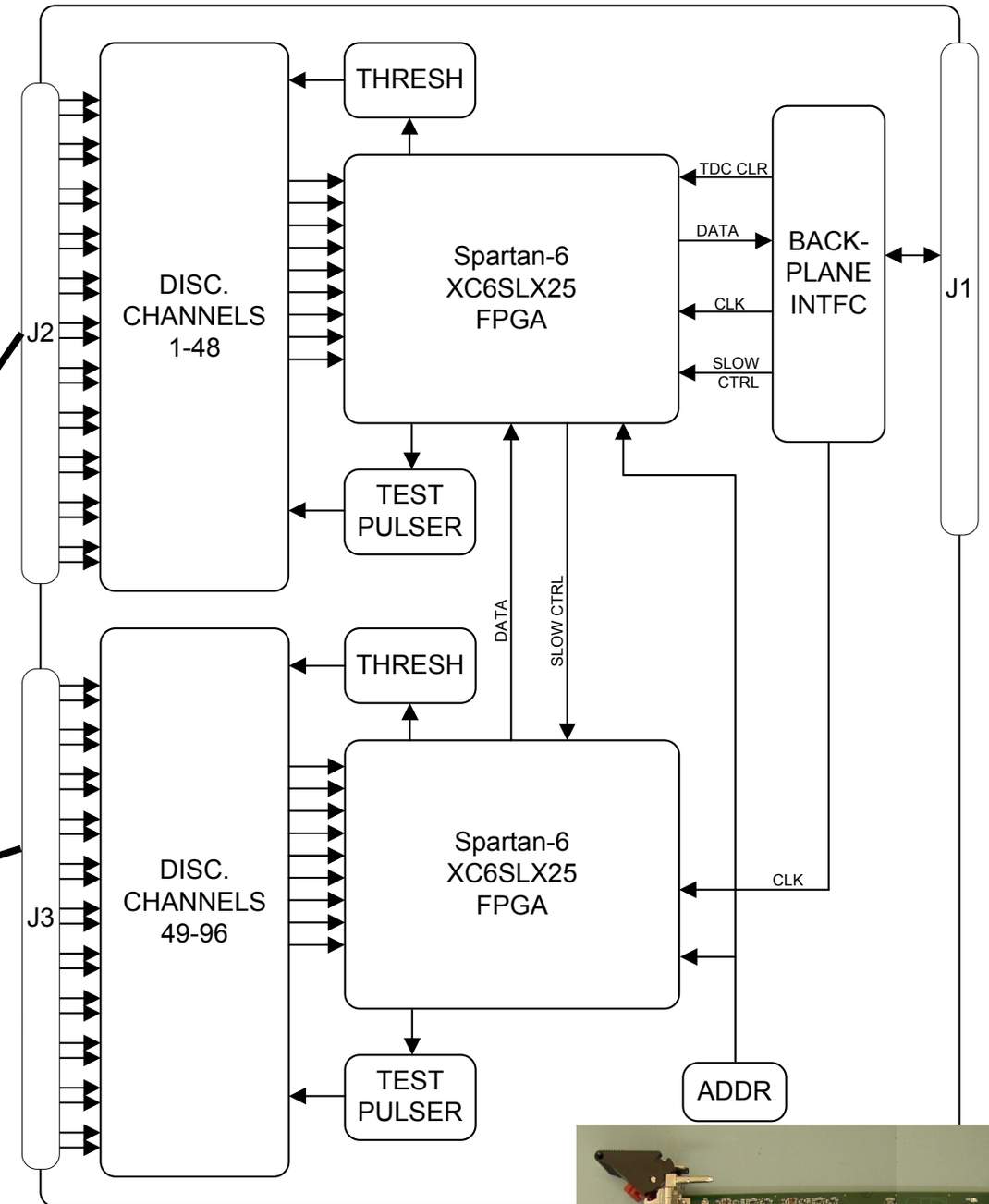

(1 of 13x8x2)

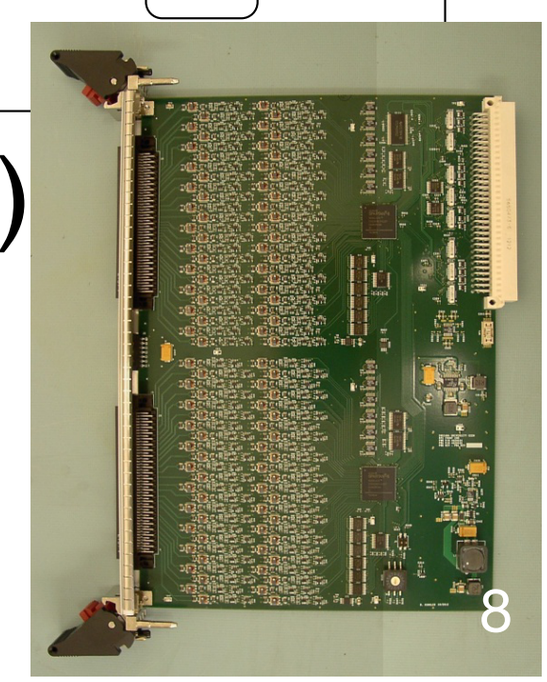

INDIANA UNIVERSITY
BLOOMINGTON

Endcap K_L–Muon (KLM) data flow for scintillators

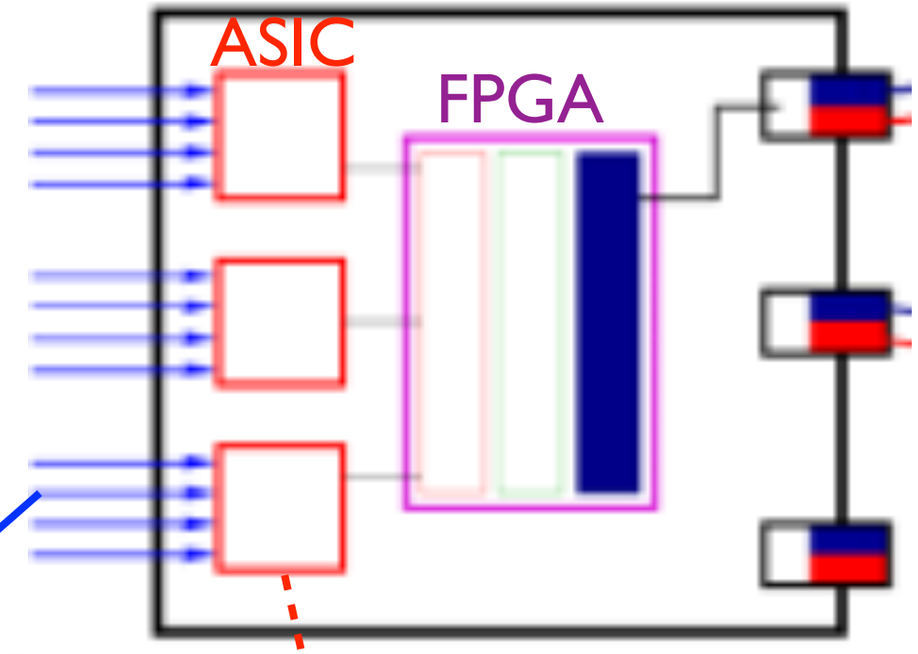

(1 of 14x4x2)

preamplifiers (in detector)

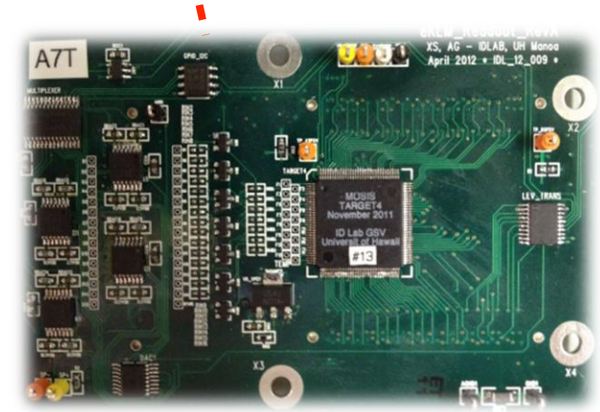

(1 of 10)

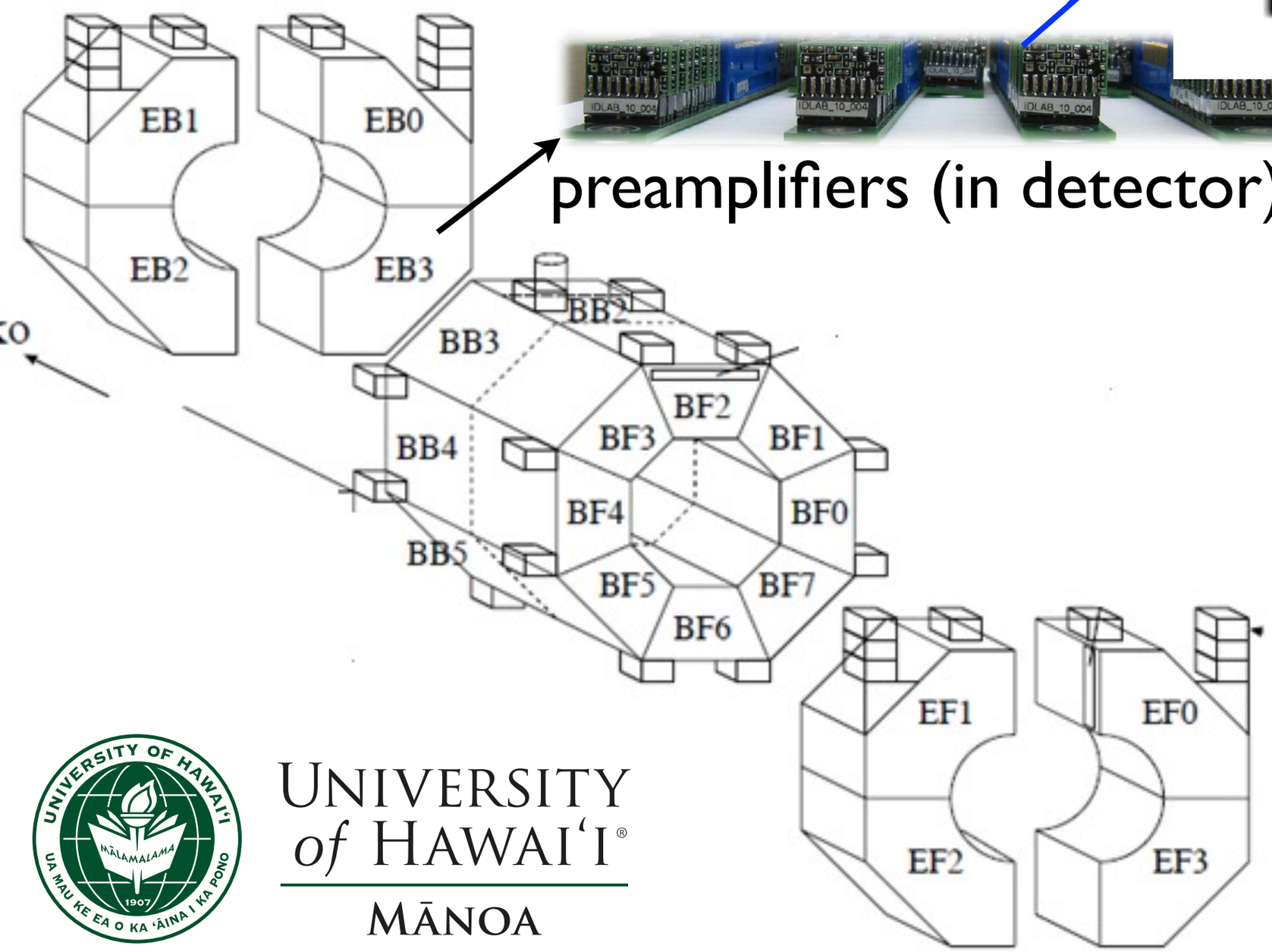

UNIVERSITY of HAWAI'I®
MĀNOA

Data concentrator card (1 of 32)

INDIANA UNIVERSITY
BLOOMINGTON

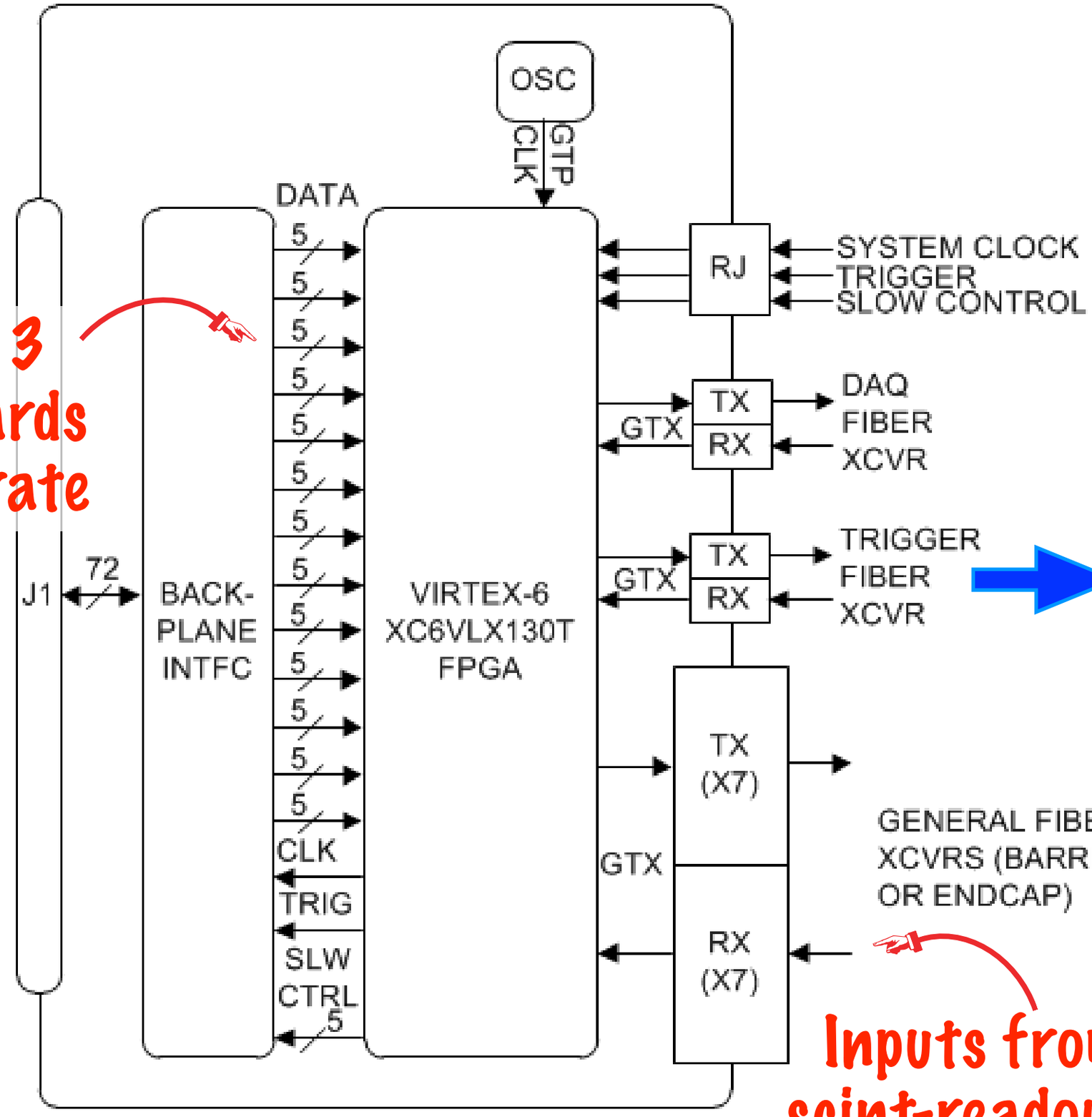

Inputs from 13 RPC-readout cards in same VME crate

to KLM trigger

Inputs from 2-7 scint-readout cards

Data concentrator card (1 of 32) data flow

INDIANA UNIVERSITY
BLOOMINGTON

Inputs from 13 RPC-readout cards in same VME crate

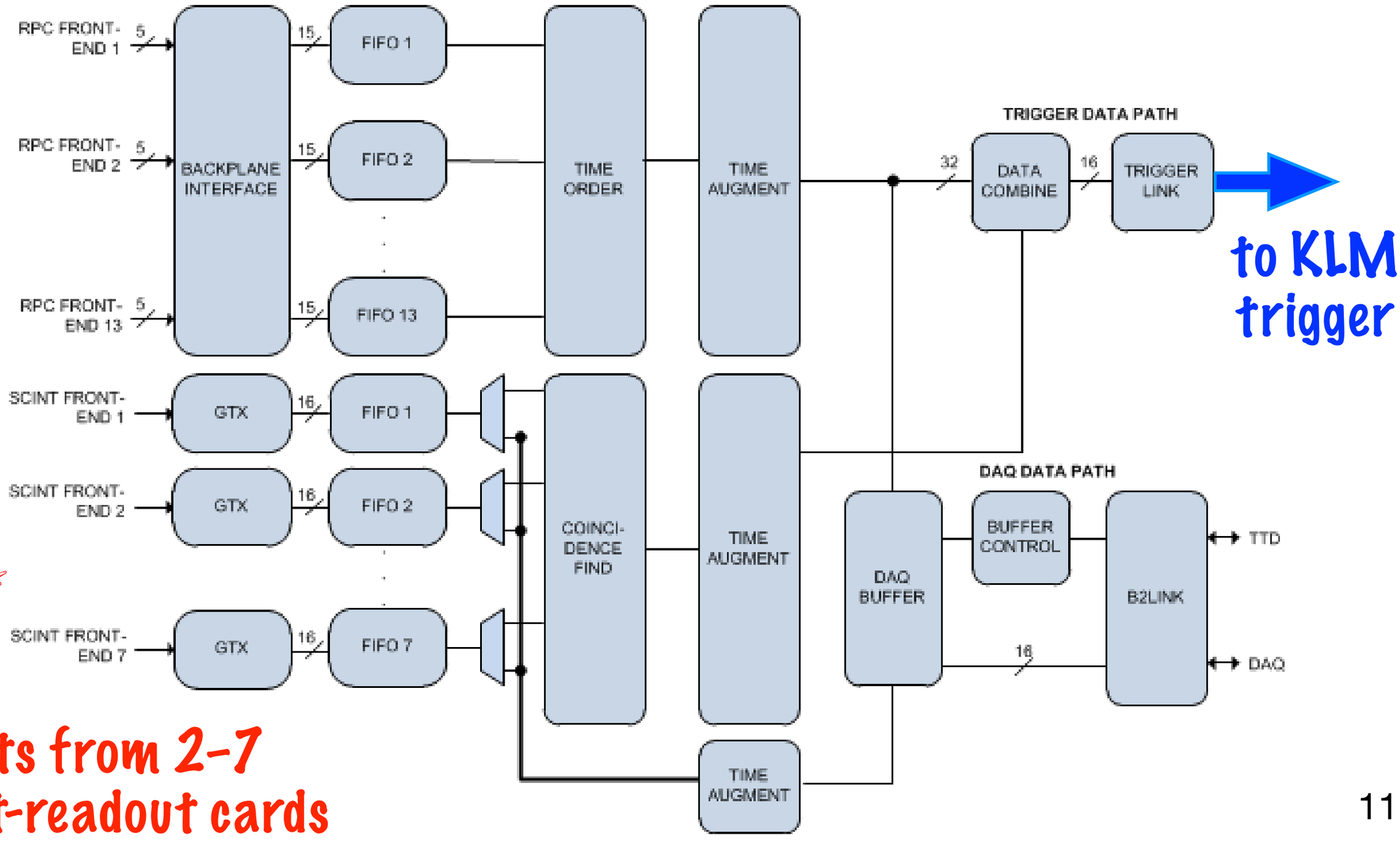

to KLM trigger

Inputs from 2-7 scint-readout cards

Universal Trigger Board
with GTX daughter board and general IO board

- ✓ FPGA = Virtex6 HXT
- ✓ Input/Output:
  - Clock: 1 in, 3 out
  - NIM: 10 in, 10 out
  - 24 GTH (11 Gbps x 24)
  - 40 GTX (6.25 Gbps x 40)
  - LVDS: 32x2 in/out
  - RJ45: 4 (for Belle2Link)

KEK

KLM trigger finds muon tracks and K_L clusters

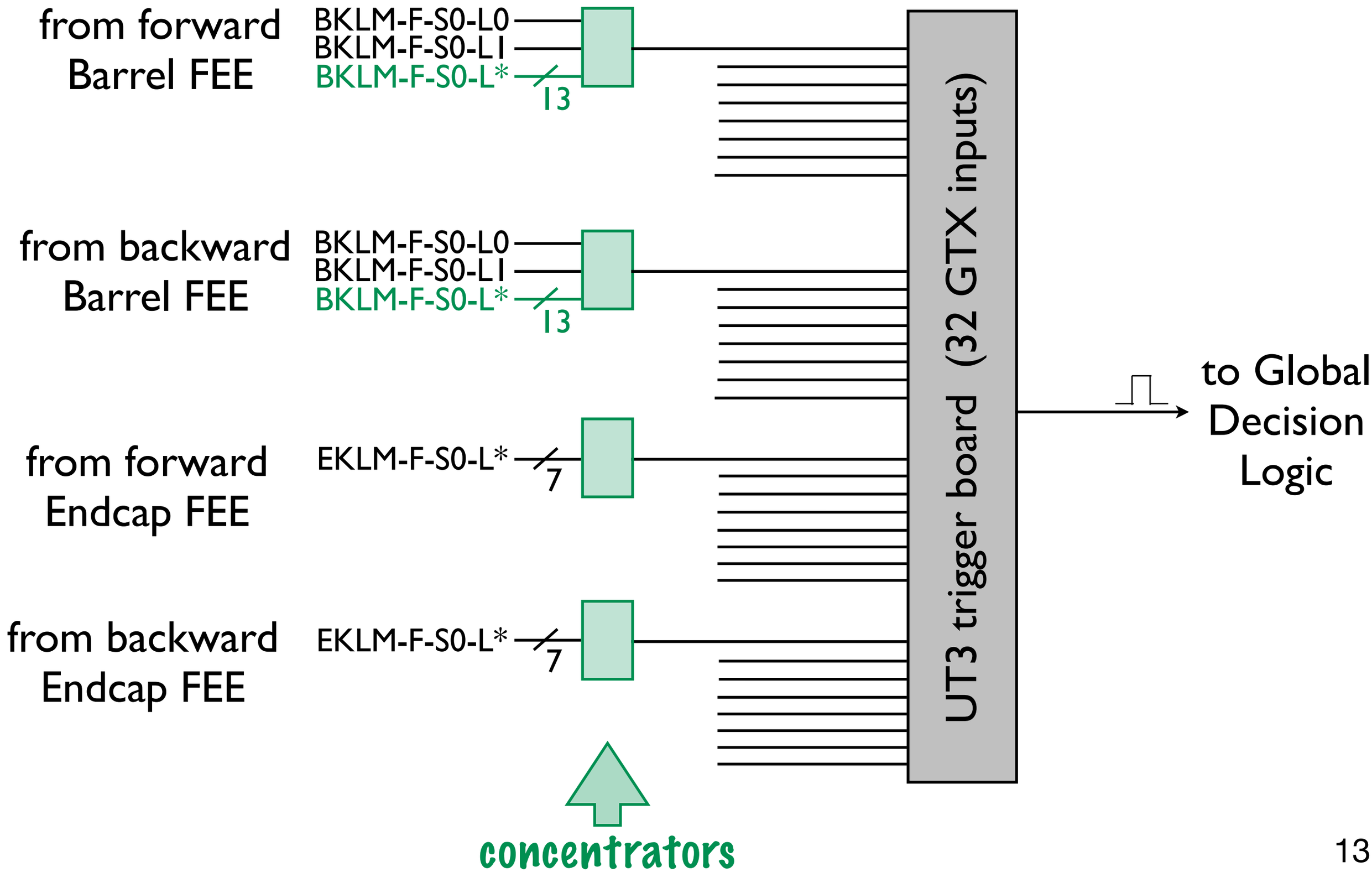

Concentrator board passes only "good" hits to UT3

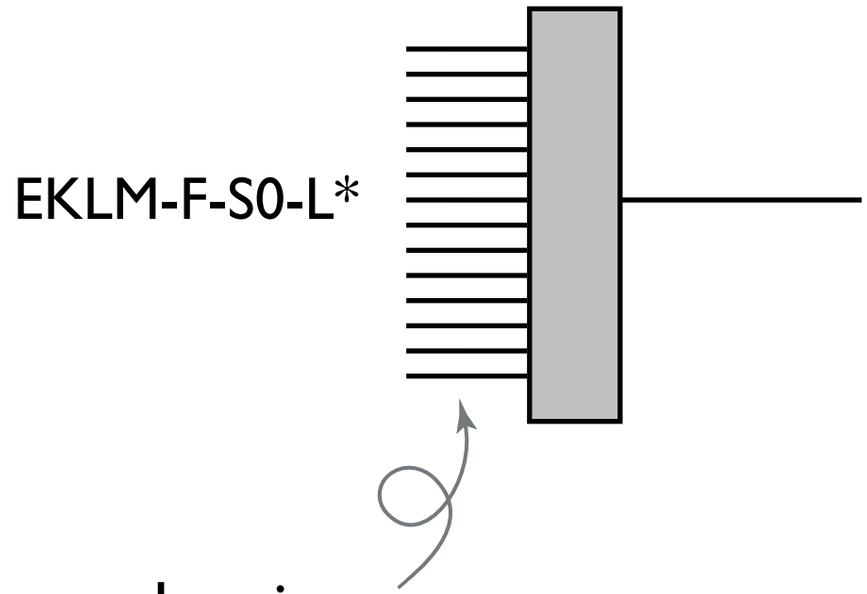

Each line delivers x- and y-view hits from one detector module

- An x-view hit is passed only if the concentrator sees an in-time y-view hit in the same module
- A y-view hit is passed only if the concentrator sees an in-time x-view hit in the same module
- All hits are time-ordered

Trigger algorithm finds 2D track(s) in each projection

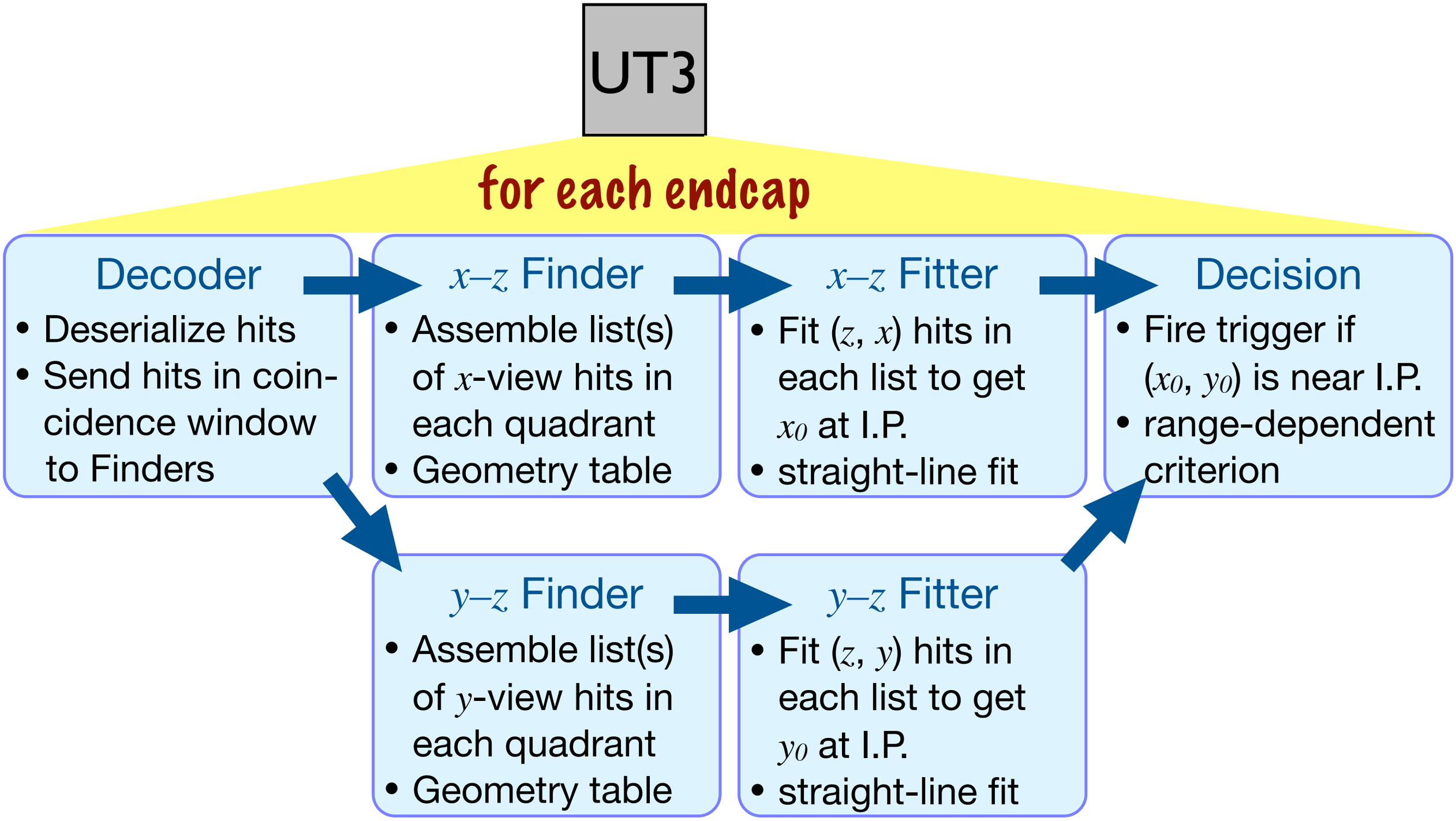

Trigger algorithm finds 2D track(s) in each projection

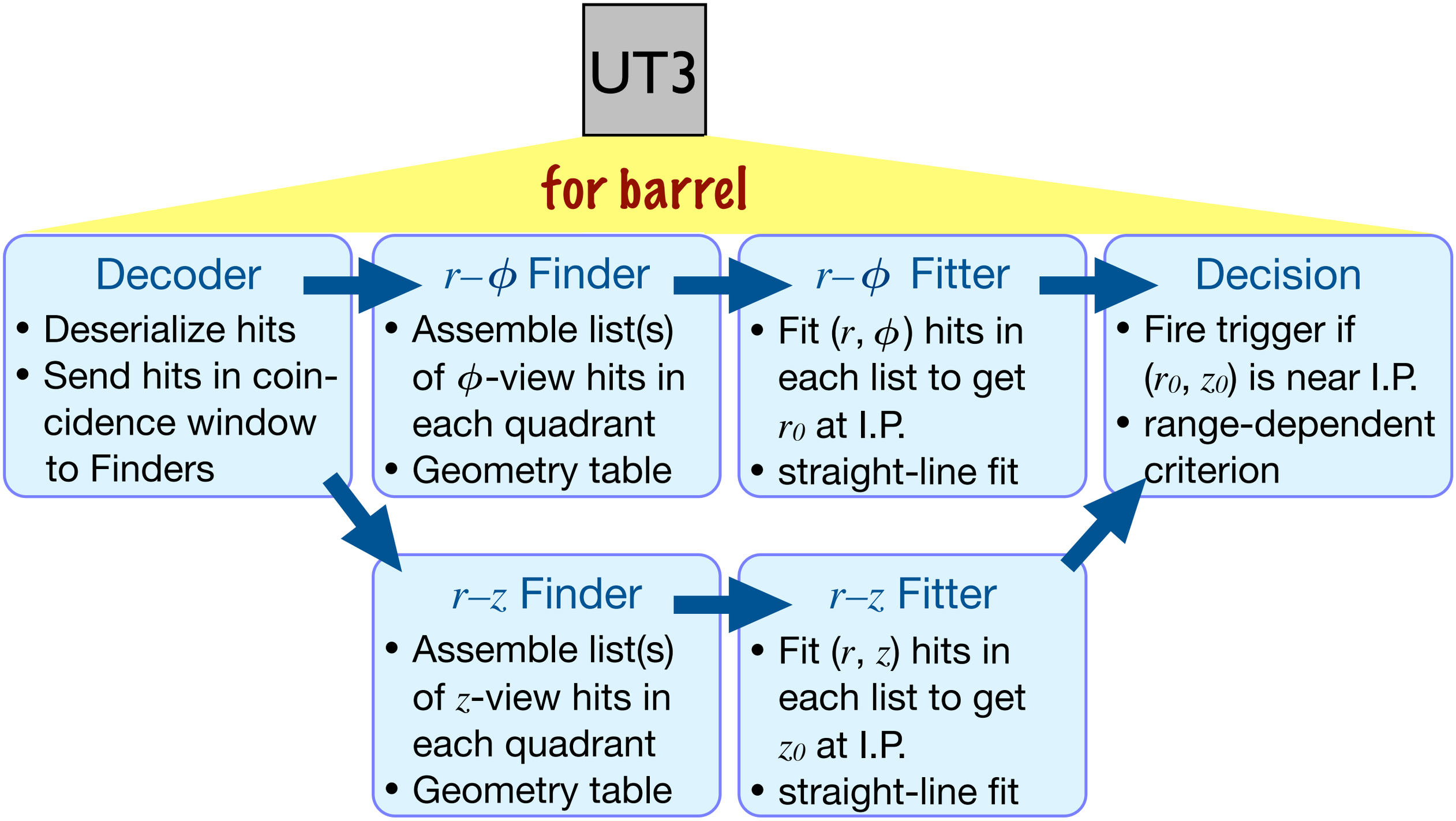

Trigger hardware setup w/Xilinx software environment

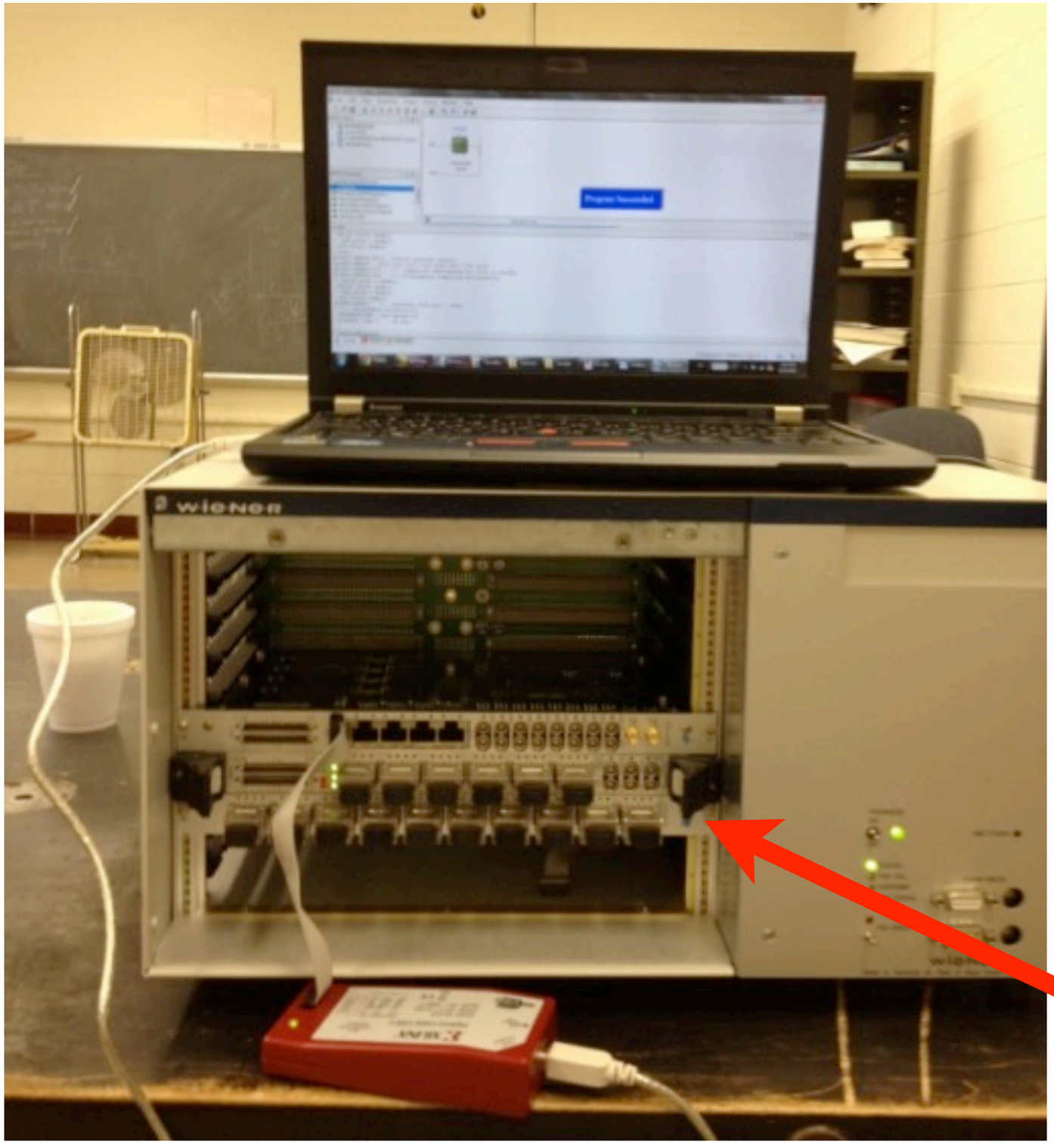

KLM Universal Trigger Module

KLM Trigger algorithm: simulation environment on PC

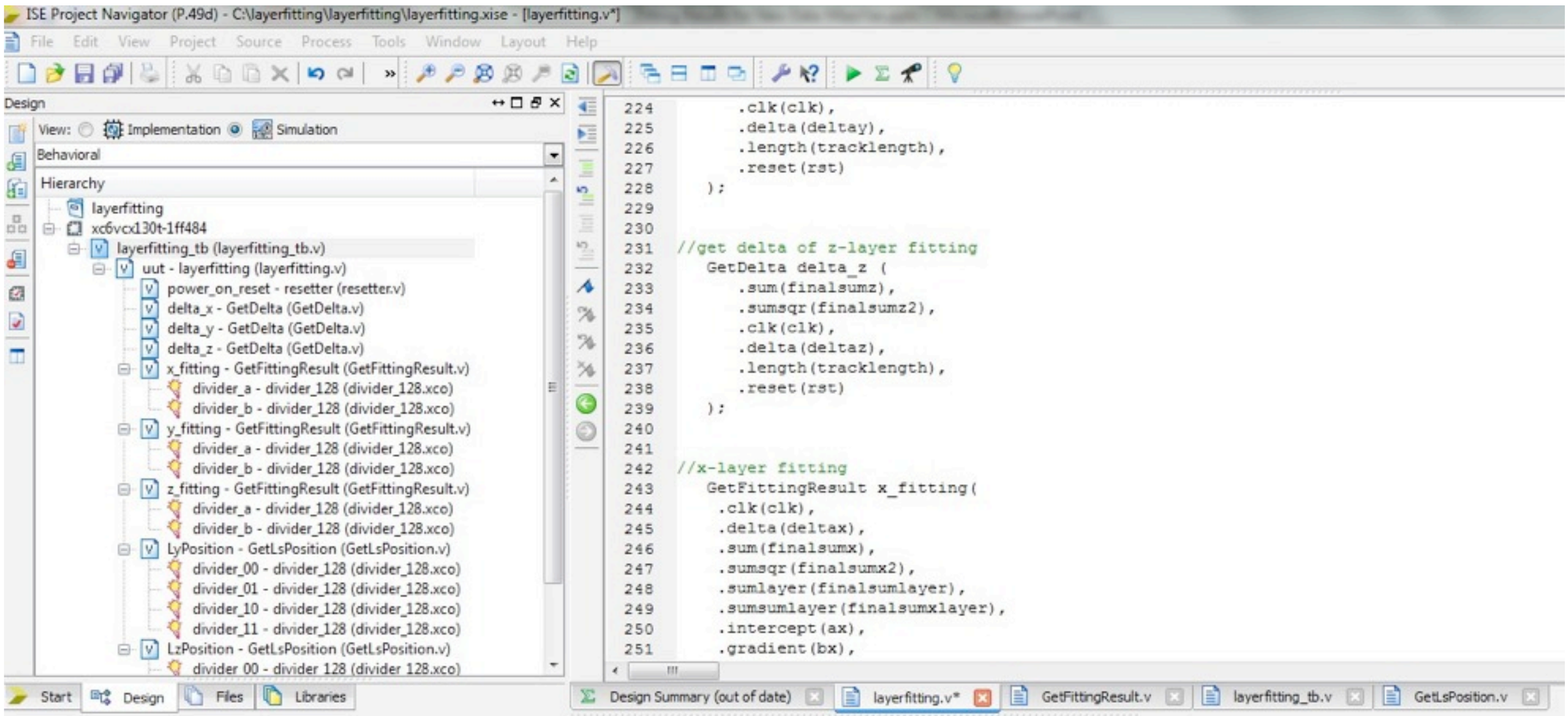

KLM Trigger algorithm synthesis: resource utilization

Minimum period: **2.476ns** (Maximum Frequency: **403.877MHz**)
Minimum input arrival time before clock: 40.713ns
Maximum output required time after clock: 0.777ns

Logic Utilization	Used	Available	Utilization
Number of Slice Registers	41209	708480	5%
Number of Slice LUTs	16653	354240	4%
Number of fully used LUT-FF pairs	14555	43307	33%
Number of bonded IOBs	193	720	26%
Number of BUFG/BUFGCTRLs	1	32	3%
Number of DSP48E1s	69	864	7%

ChipScope Pro time analysis of track-finding algorithm

~0.3 μs

43 clock cycles

38 clock cycles

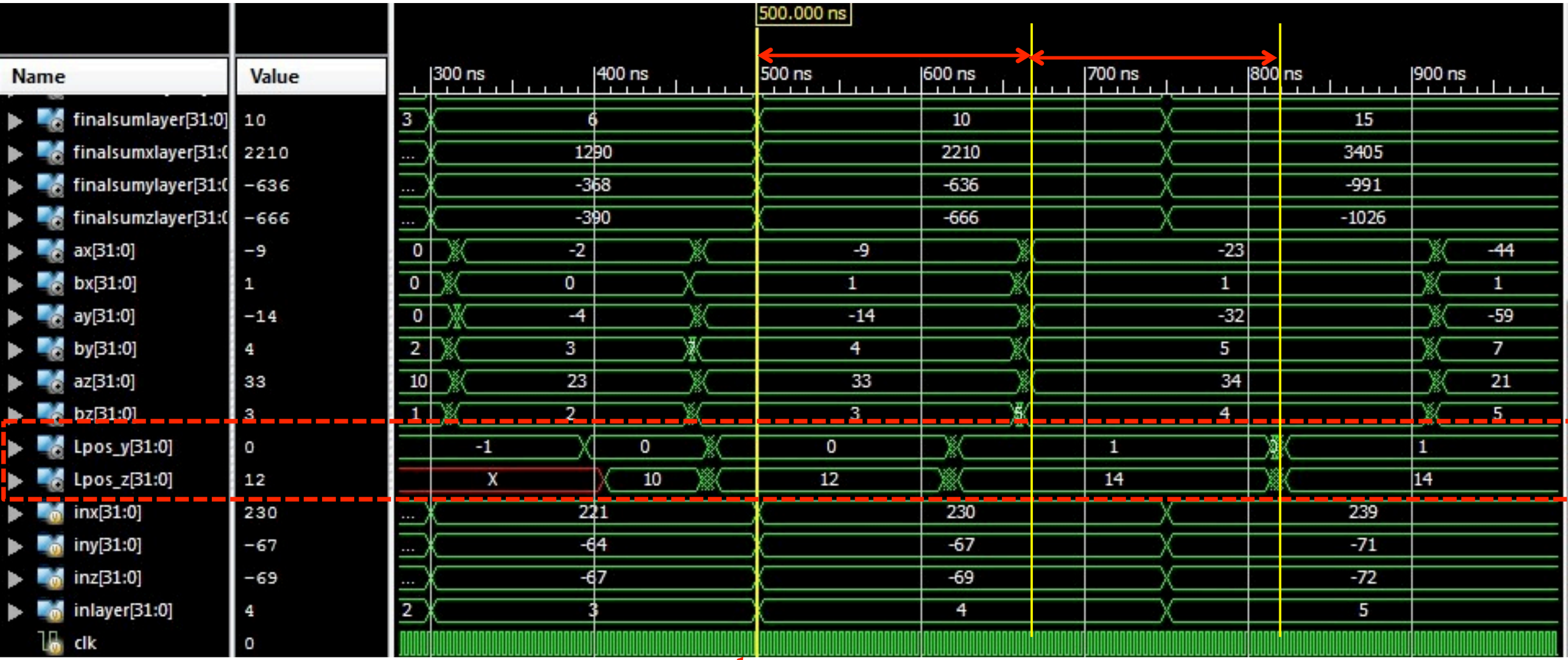

Input data are available

Deltas are available

L0s are available

Summary

- Muon track-finding algorithm has been implemented in the Belle II Universal Trigger Board *(with ChipScope debugger)*
- Both 1D projections of each track are found in well under 1 μs (trigger system's upper limit is 3 μs)
- K_L cluster-finding algorithm is in development
- To come:
  - ★ test algorithm robustness in the presence of neutron background (=noise hits), cosmics, multiple tracks and clusters (2013-2014)
  - ★ offline C++ version of KLM trigger simulator (2014)
  - ★ implement full end-to-end test with all hardware (2014)