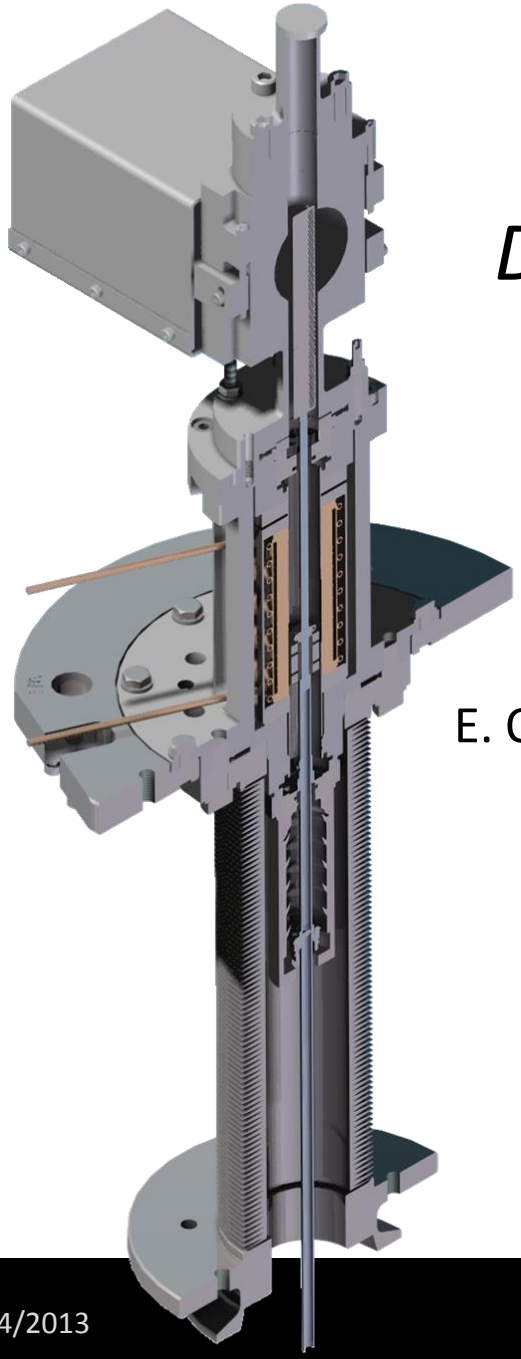

Development of a Reliable Target Mechanism for the Muon Ionisation Cooling Experiment

E. Overton, C. Booth, P. Hodgson, P. Smith, M. Robinson
University of Sheffield

K. Long, G. Barber
Imperial College London

J. Tarrant
Rutherford Appleton Lab

Muon Ionisation Cooling

- Ionisation cooling is a technique to rapidly reduce the phase space of a muon beam.
- This is important to a future neutrino factory where a beam of muons will be accelerated, because the initial size of the beam is much larger than the accelerator can accept.

Principle:

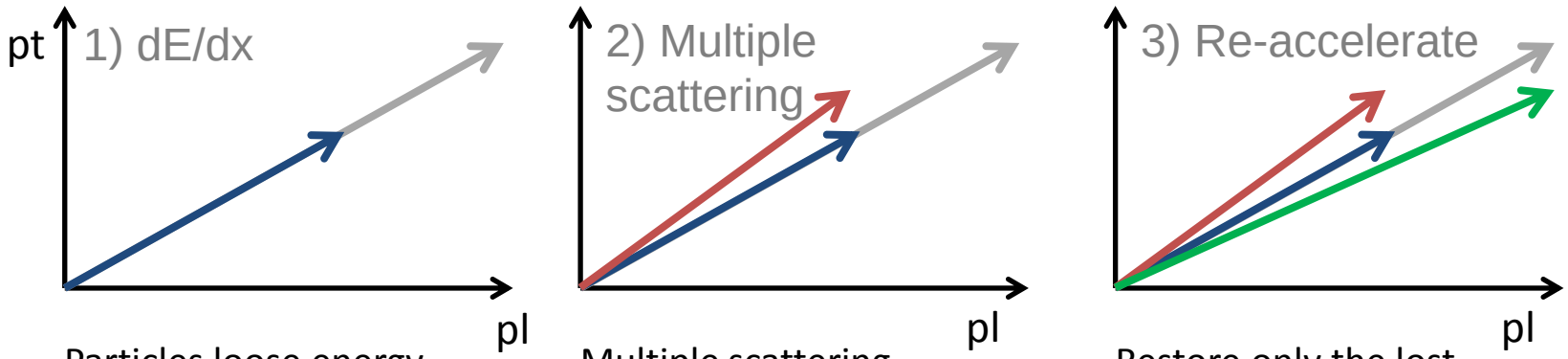

Particles loose energy through ionisation. Reducing transverse and longitudinal momentum.

Multiple scattering increases the phase space of the beam.

Restore only the lost longitudinal momentum.

The Muon Ionisation Cooling Experiment (MICE)

- MICE is an R&D experiment to demonstrate the feasibility of using Ionisation Cooling to cool a muon beam.

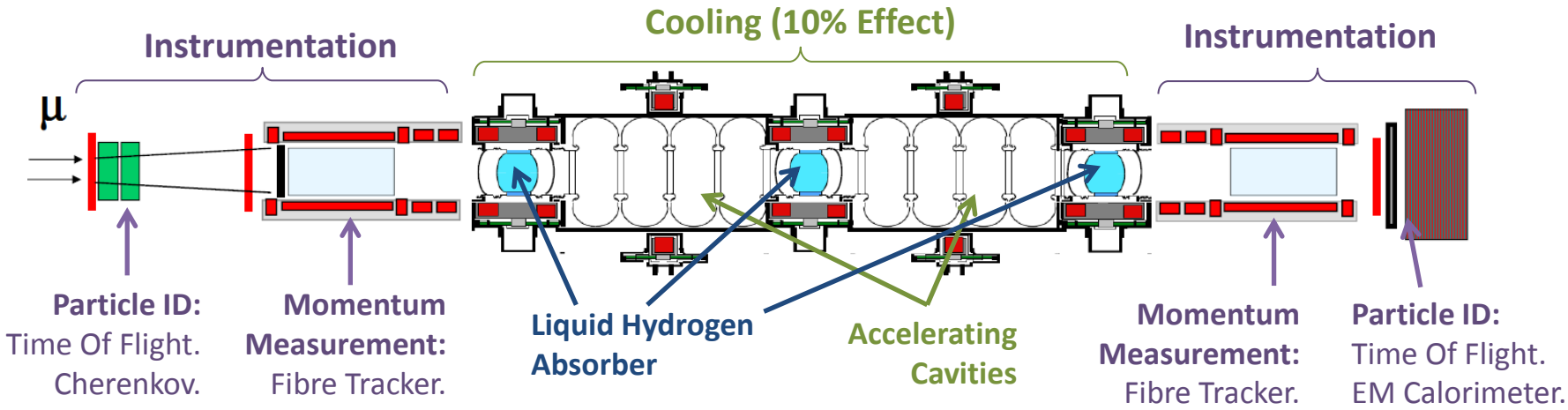

- The emittance before and after cooling will be measured to absolute precision of 0.1%, using single particle measurements.
- This method requires a steady rate of single particles to build a image of the beam.

Beamline image from: www.mice.iit.edu

The MICE Target Mechanism

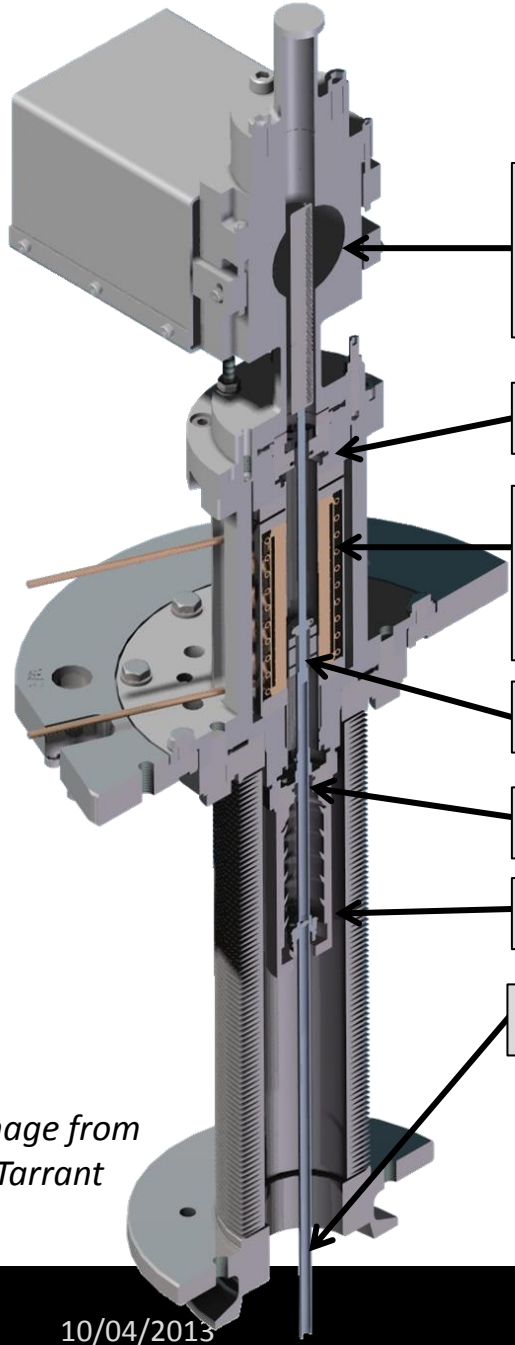

Image from J. Tarrant

- To generate a low rate muon beam for MICE a mechanism has been developed which controllably inserts a titanium tip into a circulating particle beam.
- Dry (VESPEL) bearings are used due to the vacuum of the accelerator. The shaft is coated in Diamond Like Carbon (DLC).
- Motor phases can be driven to either levitate the shaft or provide a large acceleration.
- All electronics is located outside the synchrotron vault.

Target Mechanism Operation

- The mechanism is fitted on the ISIS Proton Synchrotron at Rutherford Appleton Laboratory, which accelerates particles from an energy of 70MeV to 800MeV over 10ms.

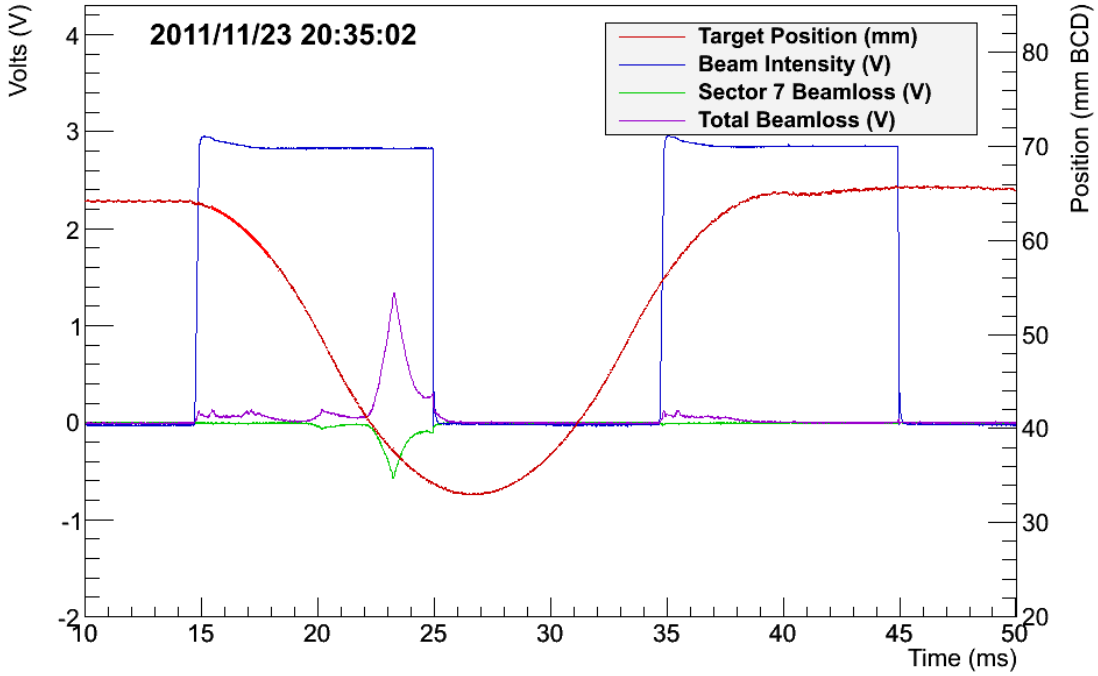

- The tip enters the beam at the end of cycle and is removed before the start of the next, requiring around 80g of acceleration.
- The large acceleration is demanding on the bearings, which has necessitated an indirect means of monitoring the bearings.

Mechanism Monitoring

- To protect the mechanism and ISIS from damage the control system continuously monitors crucial components of the system and will stop the mechanism in case of:
  - Over temperature in the coils.
  - Loss or dim optical quadrature channel(s).
  - Actuation not meeting a pre-defined trajectory.

- To prevent this system being triggered, the target is checked daily for:
  - Brightness of the optical quadrature channels (gain adjusted to keep in safe limits).
  - Trajectory of the mechanism (compared to pre-defined limits)
  - Friction in the bearings (indirectly)…

- This allows changes to be made and a replacement to be arranged at the first sign of a problem.

Indirect bearing monitoring

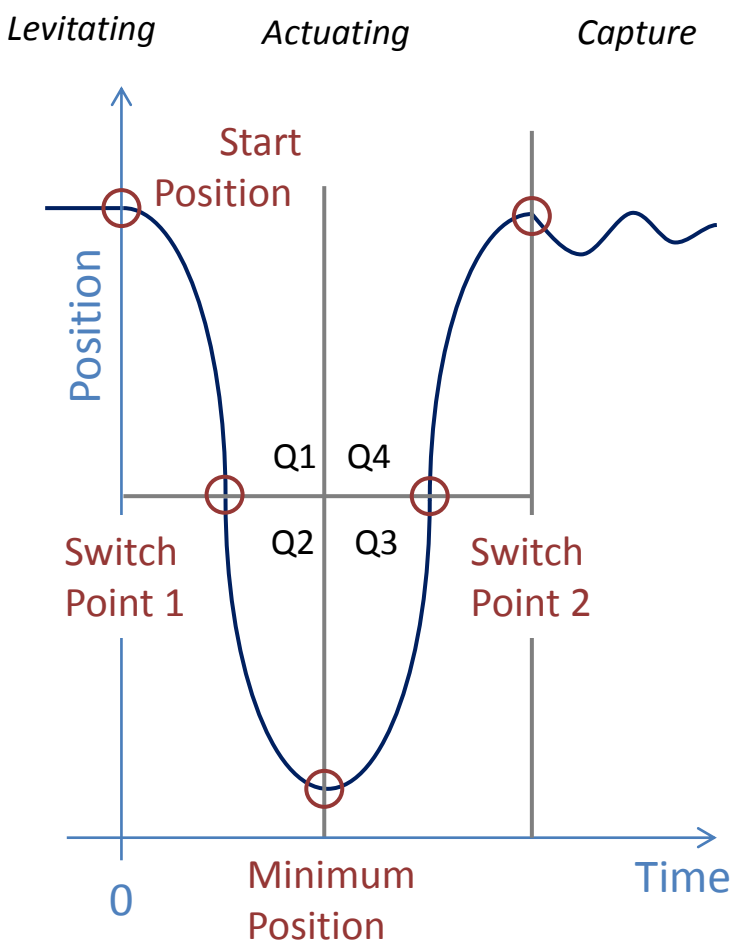

During operation the control system returns key values from the actuation to the computer (red points), which enable the bearings to be indirectly monitored using two methods:

1) The acceleration of the mechanism can be found. This is calculated from the start, to the first switch point.
2) At the end of the actuation the magnets are captured in a magnetic potential. A larger friction allows the stopping position to be further from the centre of the well. This is seen in the width of the distribution of start points.

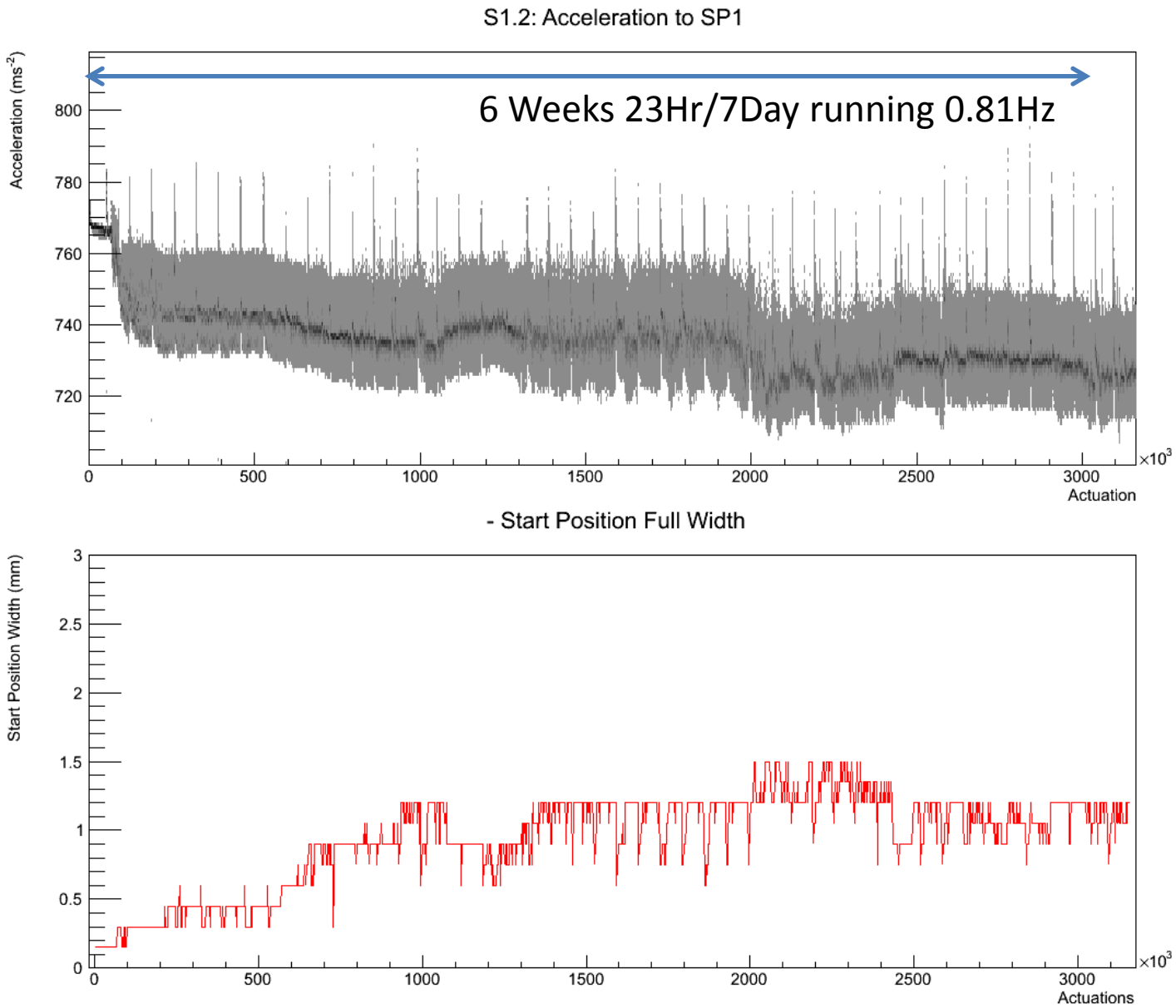
S1.2: Acceleration to SP1
6 Weeks 23Hr/7Day running 0.81Hz
Acceleration (ms^{-2})
800
780
760
740
720
0
500
1000
1500
2000
2500
3000
×10^3
Actuation
- Start Position Full Width
Start Position Width (mm)
3
2.5
2
1.5
1
0.5
0
0
500
1000
1500
2000
2500
3000
×10^3
Actuations

Post Run Inspection

Upper Bearings

Shaft (above dust catcher)

Shaft (below dust catcher)

Images from J. Tarrant

Summary of Testing

Test	Bearing Material	50K run in OK?	Total Actuations (K)
T2.6	DLC/VESPEL	Y	1,100
T2.7	DLC/VESPEL	Y	1,300
T2.8	DLC/VESPEL	Y	1,000 + 1,500
T2.9 (ISIS)	DLC/VESPEL	Y	260+
T1.1	DLC/VESPEL	Y	3,200
T1.2	Ti/VESPEL	Y	2,000
T1.3	Ti/VESPEL	Y	5,000
T1.4 (ISIS spare)	DLC/VESPEL	Y	50+
S1.1	DLC/VESPEL	Y	1,500
S1.1r2	DLC/VESPEL	N	80
S1.2	DLC/VESPEL	Y	3,100

Conclusion

- A target mechanism for the MICE experiment has been described which is capable of accelerating a titanium shaft in excess of 80g whilst operating in a vacuum.

- A technique for indirectly monitoring the dry bearings has been shown.

- A number of bearing tests have been conducted, which run for more than 1M actuations. This corresponds to 2 months of MICE running.

Thanks for listening

Any Questions?