CASCADE – RF cavity experiment to search for hidden sector photons

Matti Kalliokoski

Lancaster University and The Cockcroft Institute

On behalf of the CASCADE collaboration

IOP HEPP & APP 2013
10/04/2013

Hidden Sector Photons (HSP)

Hidden Sector Photons (dark photons, paraphotons, etc.)

L.B. Okun, *Zh. Eksp. Teor. Fiz. 83 (1982) p. 892-898.*

- Spin 1 gauge bosons
- Associated with extra U(1) symmetries
- Kinetic mixing with Standard Model photons
- Predicted in numerous extensions to the SM

Electromagnetic Field

Kinetic Mixing Term

$$\mathcal{L} = -\frac{1}{4}F^{\mu\nu}F_{\mu\nu} - \frac{1}{4}B^{\mu\nu}B_{\mu\nu} - \frac{1}{2}\chi F^{\mu\nu}B_{\mu\nu} + \frac{1}{2}m_{\gamma'}^2 B_\mu B^\mu$$

HSP Field

HSP Mass Term

Light Shining Through the Walls (LSW)

- Since HSPs do not interact with matter, they can traverse regions that would be impenetrable by standard light
- Since HSPs do not lose energy when traversing the shield, the photon produced behind the shielding must have same properties as the original photon
- LSW experiments are based on this effect

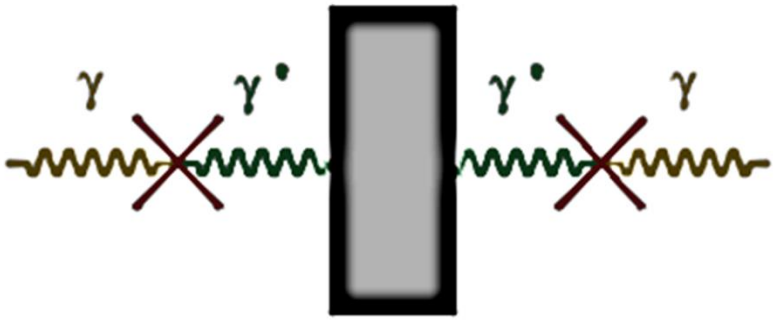

- There has been several experiments using optical laser light:
  - Any Light Particle Search (ALPS) at DESY, K. Ehret et al., *NIMA* 612 (2009) 82-89.
  - Optical Search of QED vacuum magnetic birefringence, Axion and photon Regenaration (OSQAR) at CERN, P. Pugnat et al., *Phys.Rev.D* 78, 092003.
  - GammeV at Fermilab, A.S.Chou et al., *PRL* 100, 080402.

LSW Using Microwave Cavities

- HSPs will couple resonant cavities
- An RF photon mixes into a dark photon, propagates to the second cavity, and mixes back into identical frequency RF photon
- The probability for this process is $\mathcal{P} = \frac{P_{det}}{P_{em}} = \chi^4 Q_{em} Q_{det} \frac{{m_{\gamma'}}^8}{{\omega_0}^8} |G|^2$
  - χ is the coupling
  - Q_{em} and Q_{det} are the cavity quality factors
  - $m_{\gamma'}$ is the hidden photon mass
  - ω_0 is the cavity resonant frequency
  - G is a dimensionless parameter encoding the geometry of the experimental setup
  - P_{em} and P_{det} are the input power of the emitter cavity and the power transferred to the detector cavity

    J. Jaeckel, A. Ringwald, *Phys. Lett. B* 659 (2008) 509-514
- Two experiments have been build by groups at University of Western Australia (R. Povey et al., *Phys. Rev. D* 84, 055023) and at CERN (M. Betz, F. Caspers, *Proc. IPAC'12)*
  - Operation frequencies 10.402 GHz and 2.957 GHz, respectively

HSP Exclusions

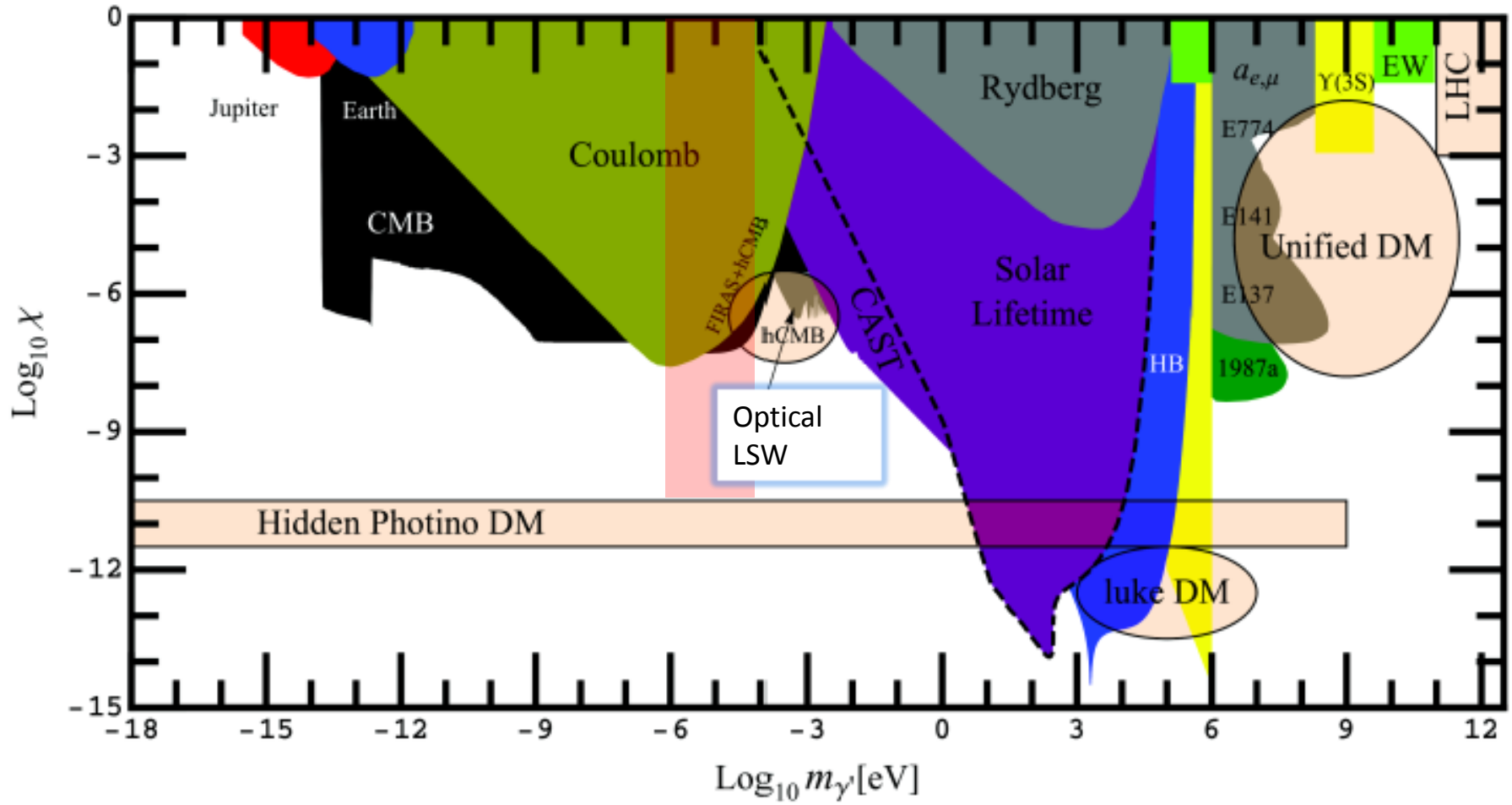

J. Jaeckel, A. Ringwald, *Annu. Rev. Nucl. Part. Sci 60* (2010) 405-437

HSP Exclusions

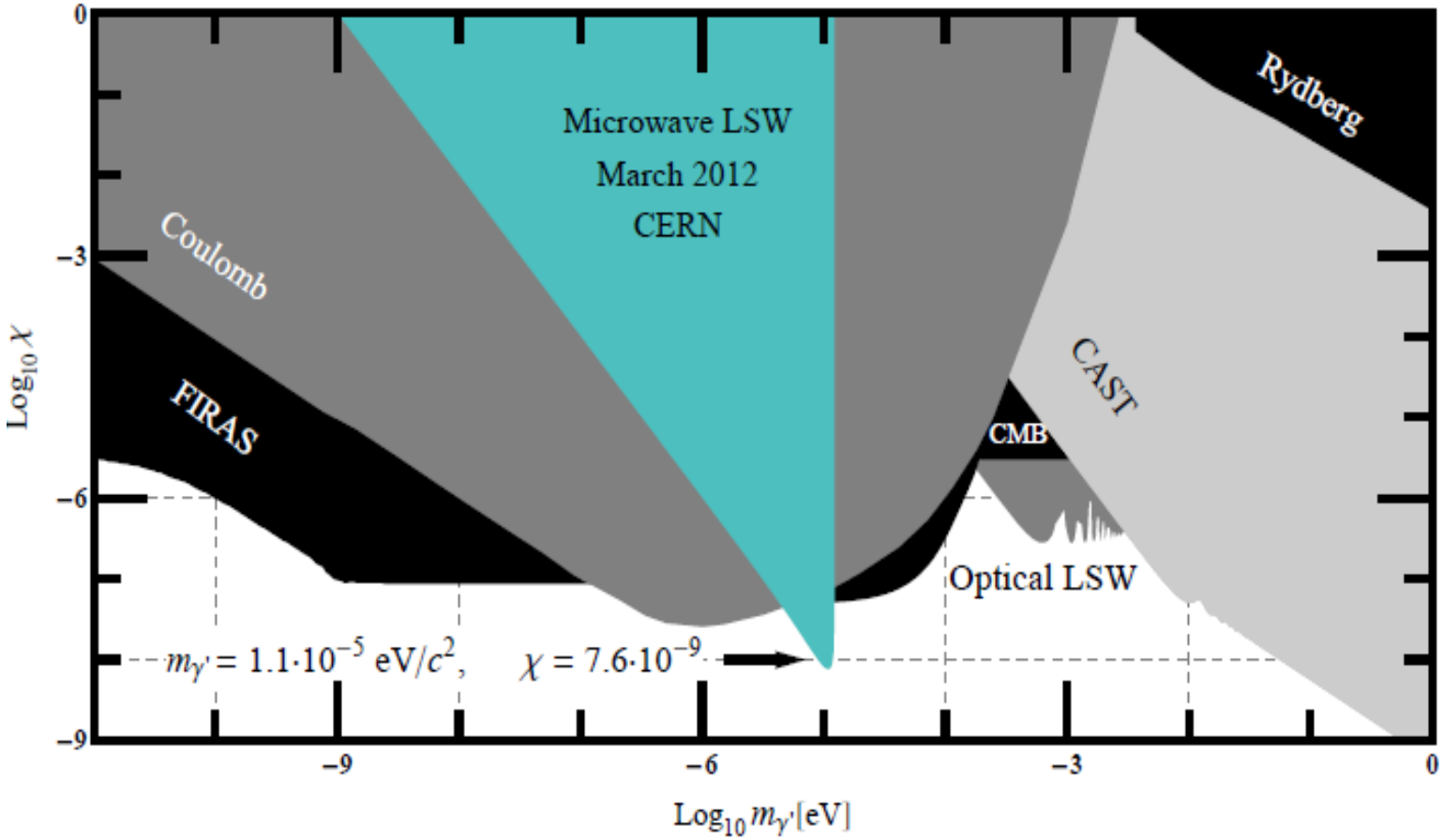

M. Betz, F. Caspers, *Proc. IPAC'12*

CASCADE – Cavity Search for Coupling of A Dark sEctor

- CASCADE experiment plans to use existing superconducting (SC) cavities as high intensity emitter source
  - With SC cavities Q-values of ~10^{10} can be reached (normal conducting (NC) cavities can reach 10^5-10^6)
- The measurements are planned to be carried out in several stages
  - In the first measurements, two NC copper pillbox cavities are used
  - In the second stage, the SC niobium cavity will be used as an emitter
  - Further stages require improvements in receivers, readout electronics and shielding between the cavities

CASCADE Measurements Using Pillbox Cavities

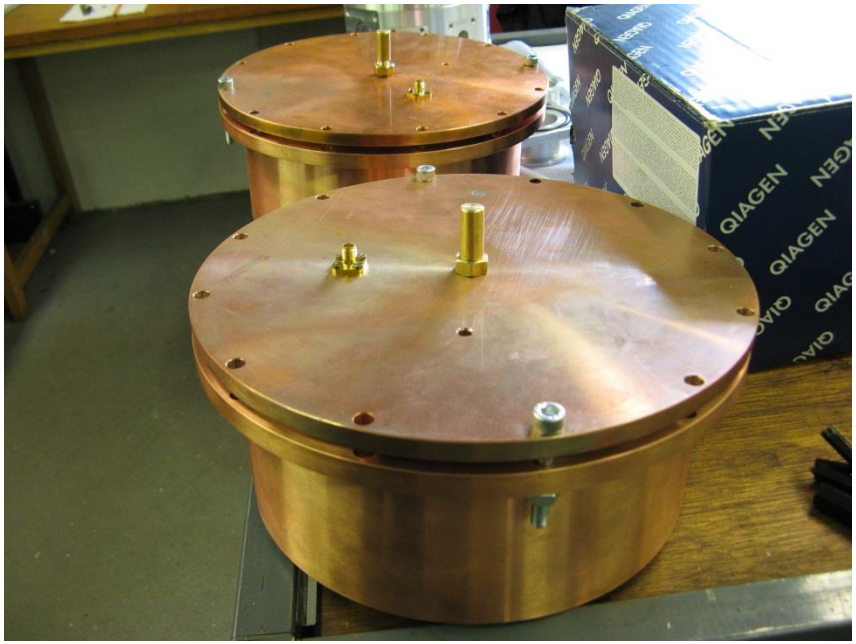

- First measurements are done using copper pillbox cavities in TM010 mode at 1.3 GHz
- The cavities will be placed in liquid nitrogen cryostat to reduce thermal noise
- The readout chain will consist of cryogenic preamplifiers and of commercial signal analyser
- The emitter cavity will have maximum input power of 1 W => To reach new exclusion region and to measure signal powers of 10^{-25} W, the cavities need to have at least 250 dB of attenuating shielding between the cavities

CASCADE Measurements Using Pillbox Cavities

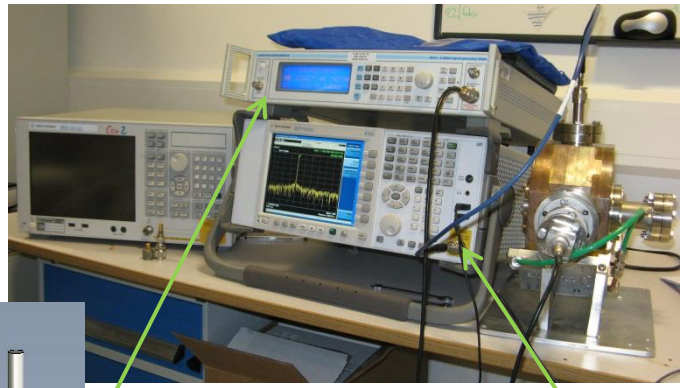

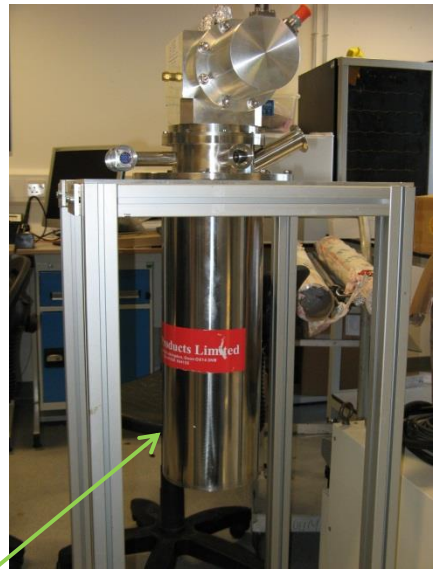

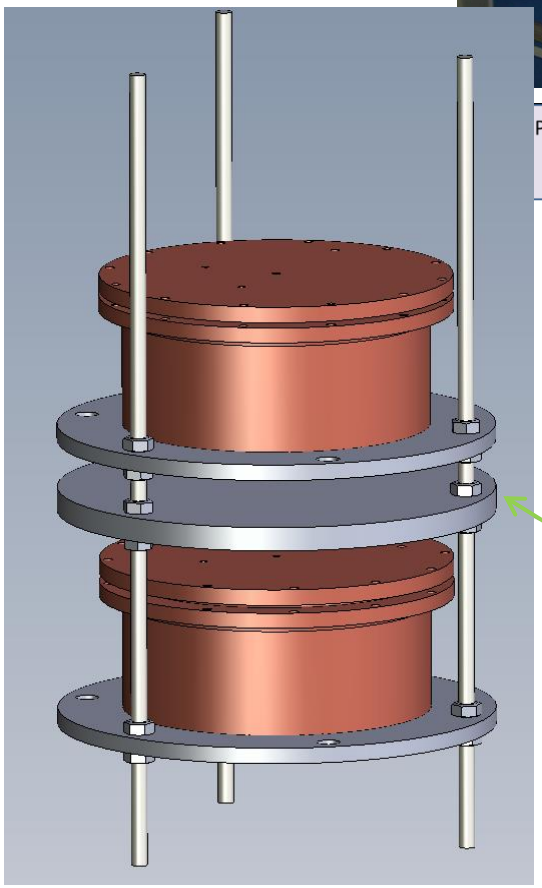

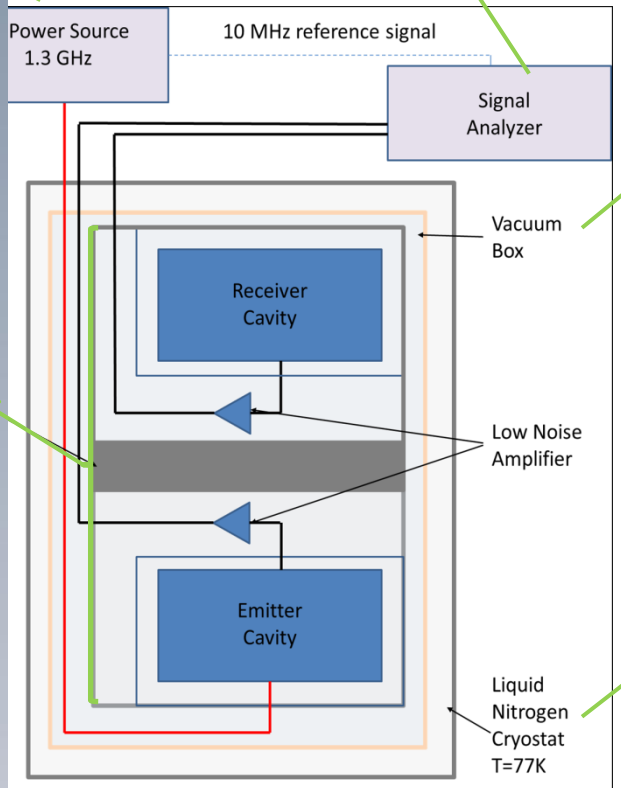

Adapted from: F. Caspers et al., *CERN-BE-Note-2009-026*

CASCADE Measurements Using Superconducting Cavities

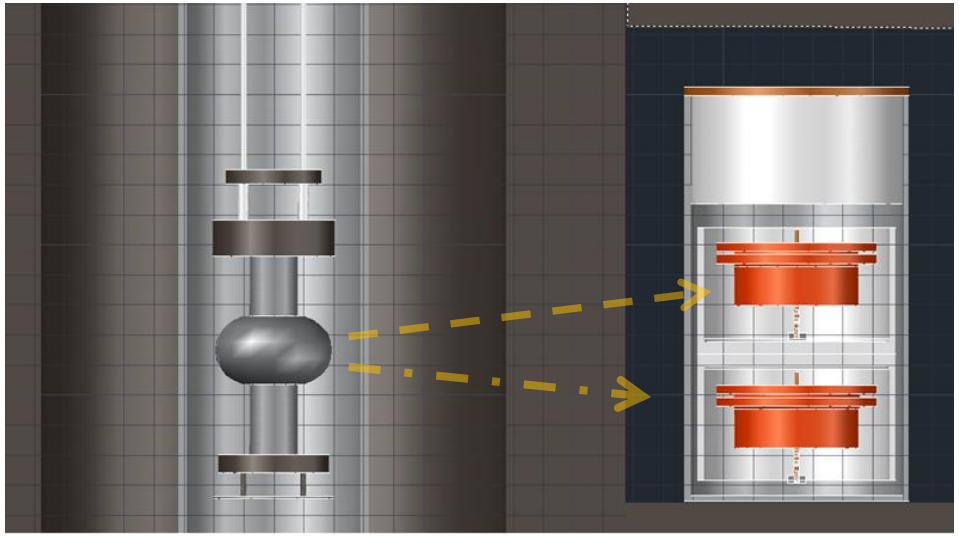

- To increase input power and overall Q of the system, a superconducting cavity is used as an emitter
- Both copper cavities will be used as receivers to perform coincidence measurements
- The receiver cavities need to have at least 270 dB attenuating shielding between them and the emitter
- The double cavity setup will be placed in an underground tunnel next to the Vertical Test Facility (VTF) at the Daresbury Laboratory
- The measurements can be made parasitic to standard cavity testing in the VTF

Possible Exclusion

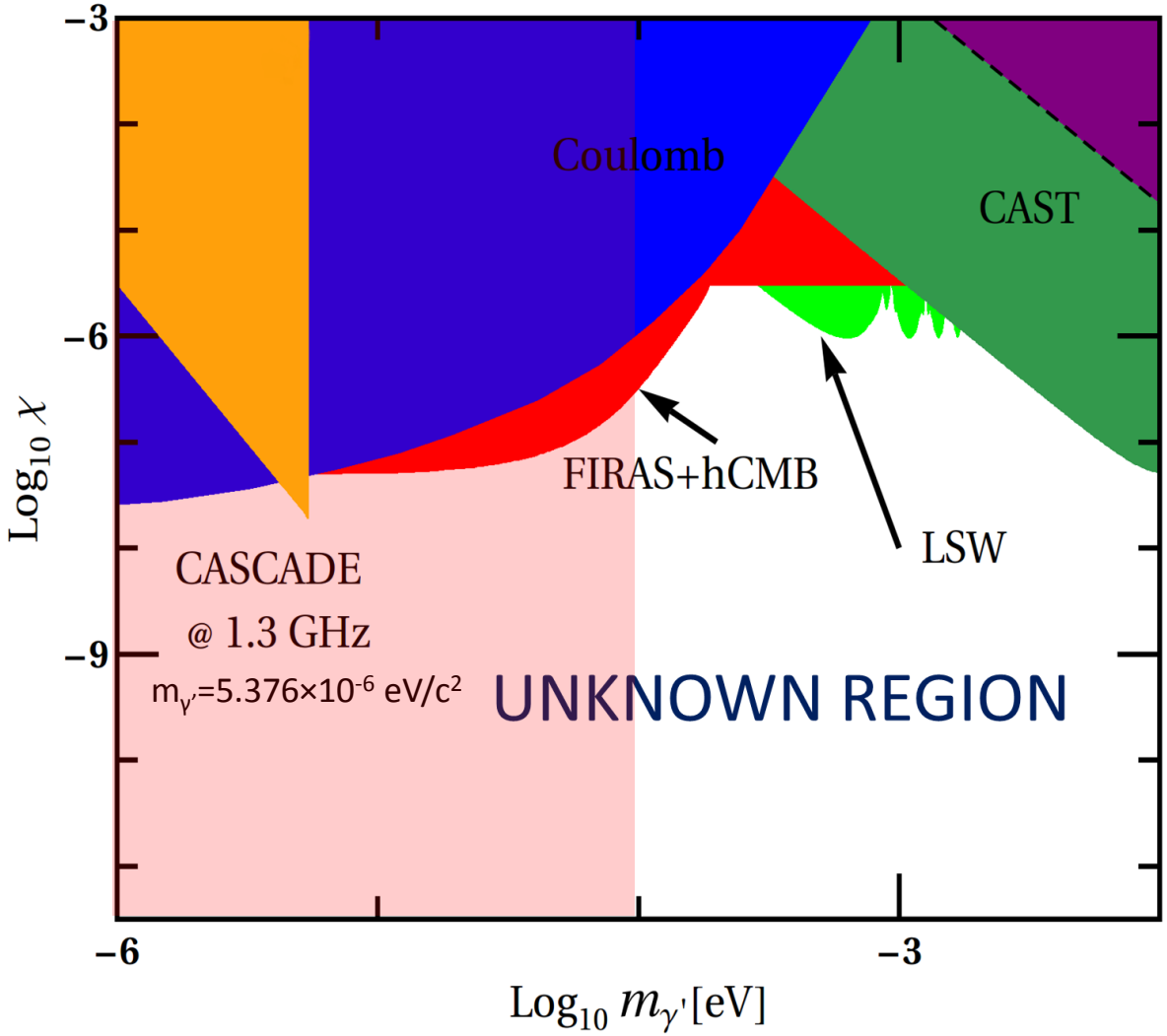

Conclusions

- The CASCADE experiment is almost ready to start to search hidden sector photons using microwave cavities
- New exclusion regions will be accessed with the full setup
- The results will be improved by building optimal readout electronics, improving shielding, increasing the integration time, improving the cavities etc.

The CASCADE Collaboration

- Lancaster University
  - I. Bailey, G. Burt, A. Dexter, M. Kalliokoski, N. Woollett
- Liverpool University
  - S. Chattopadhay, J. Dainton
- STFC Daresbury Laboratory
  - P. Goudket, S. Jamison, S. Pattalwar, T. Thakker, P. Williams
- CERN
  - M. Betz, F. Caspers