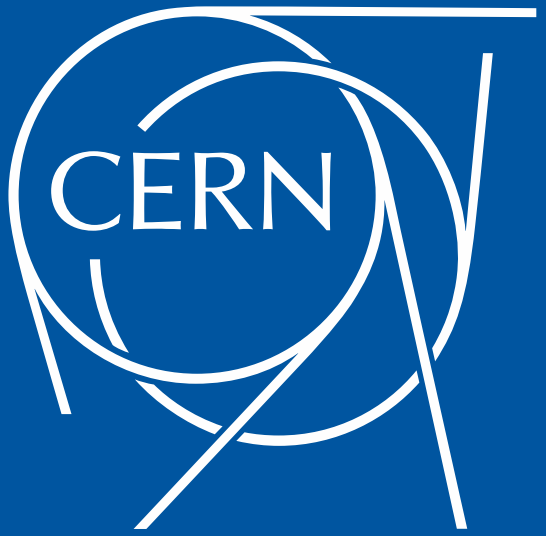
CERN

Basics of Accelerator Science and Technology at CERN

Magnet powering scheme

Jean-Paul Burnet

- Definition
- What is special for magnet powering?
- Power electronics
- Converter topologies
- Converter association
- Nested circuits
- Energy management
- Discharged converter
- Power supply control
- What should specify an accelerator physicist?

Definition

Wikipedia: A power supply is a device that supplies electric power to an electrical load.

Power supplies are everywhere:
Computer, electronics, motor drives,…

Here, the presentation covers only the very special ones for particles accelerators : Magnet power supplies

Power supply # power converter
US labs uses magnet power supplies
CERN accelerator uses power converter
CERN experiment uses power supply

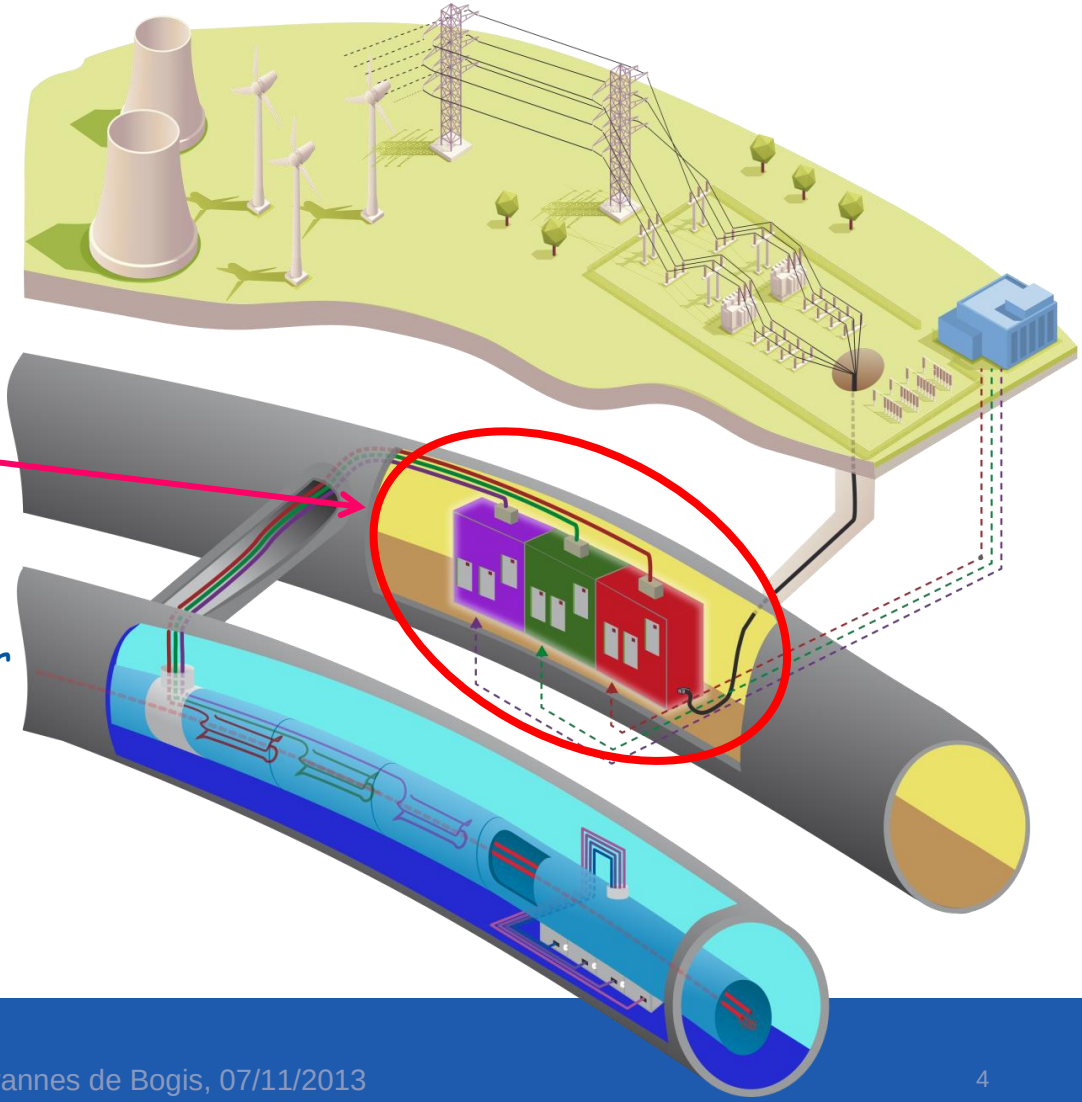

What is special for magnet powering ?

In a synchrotron, the beam energy is proportional to the magnetic field.

The magnet field is generated by the current circulating in the magnet coils.

Magnet current

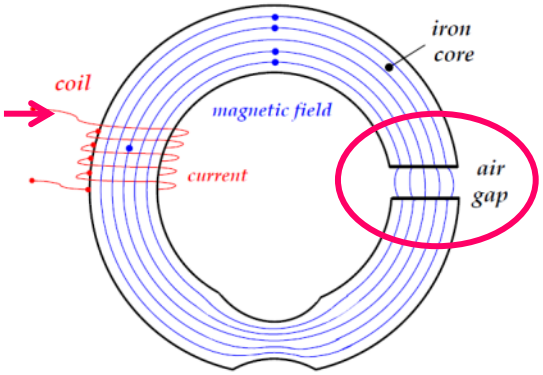

Magnetic field in the air gap

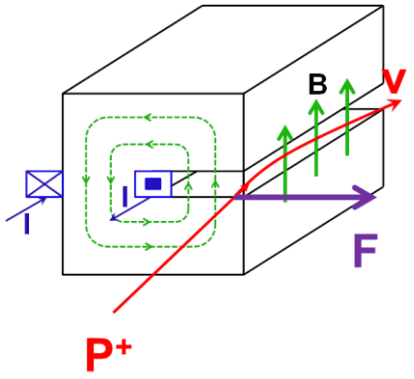

$$NI = \mathcal{R} \times \Phi$$

LHC vistar : Beam Energy = Dipole Current

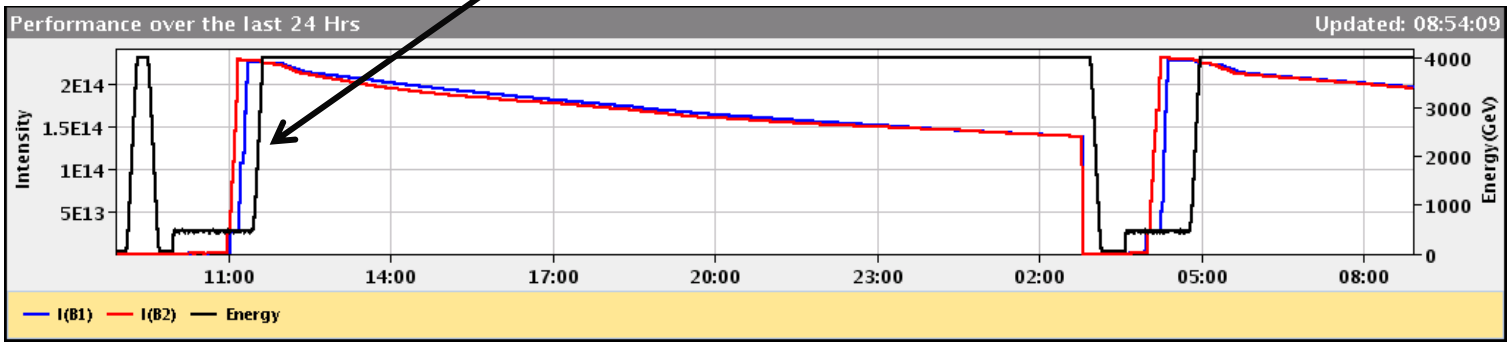

What is special for magnet powering ?

The relation between the current and B-field isn't linear due to magnetic hysteresis and eddy currents.

In reality, Beam Energy = kf×Dipole field ≠ ki×Dipole Current

Classical iron yoke

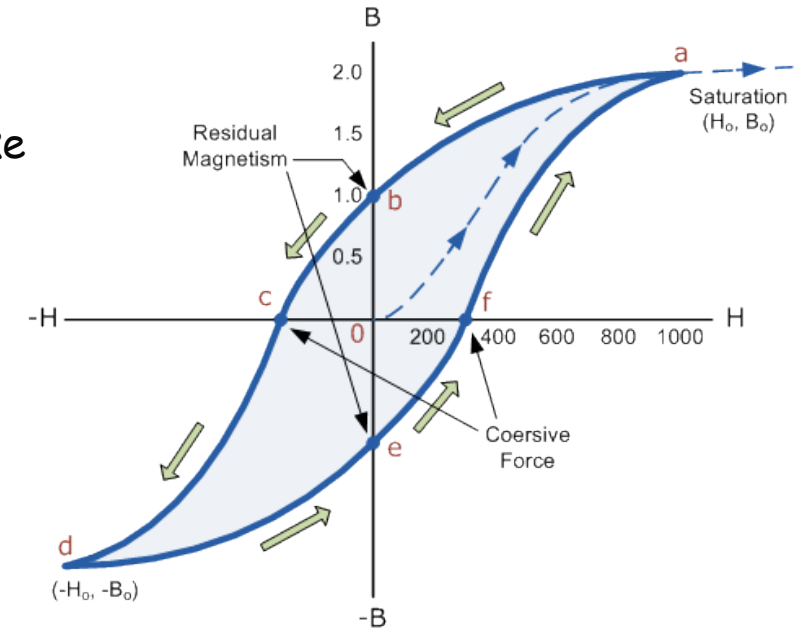

Magnet current

What is special for magnet powering ?

For superconducting magnet, the field errors (due to eddy currents) can have dynamic effects.

$$\vec{B}_y + i\vec{B}_x = \sum_{n=1}^{\infty} C_n \left(\frac{z}{R_{ref}}\right)^{n-1} = B_1 \sum_{n=1}^{\infty} \frac{(b_n + ia_n)}{10^4} \left(\frac{z}{R_{ref}}\right)^{n-1}$$

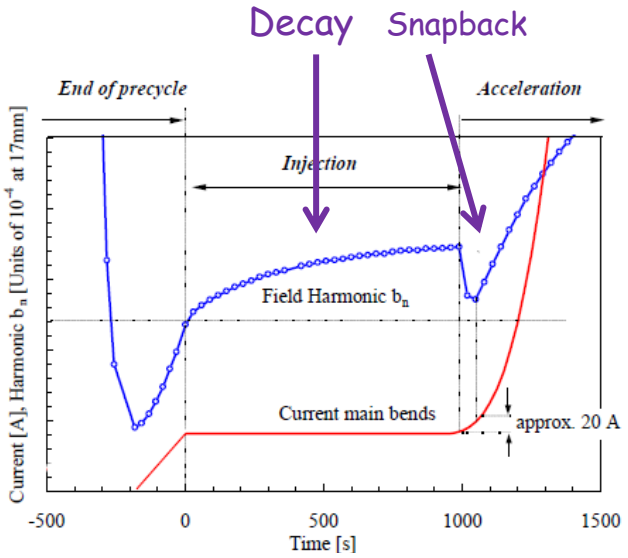

Decay is characterised by a significant drift of the multipole errors when the current in a magnet is held constant, for example during the injection plateau. When the current in a magnet is increased again (for example, at the start of the energy ramp), the multipole errors bounce back ("snap back") to their pre-decay level following an increase of the operating current by approximately 20 A.
For the energy ramp such as described in [3], the snapback takes 50-80 seconds but this can vary if, for example, the rate of change of current in the magnet is changed.

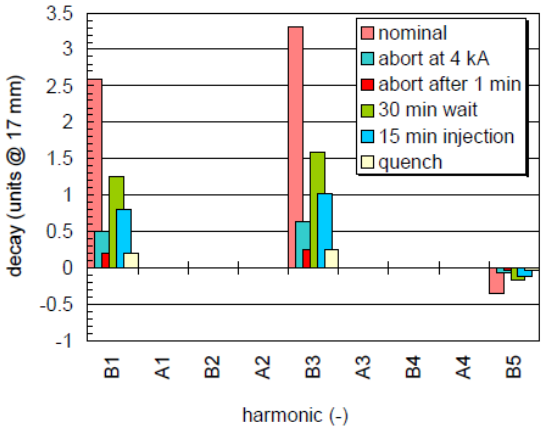

http://accelconf.web.cern.ch/accelconf/e00/PAPERS/MOP7B03.pdf

What is special for magnet powering ?

To solve this problem of hysteris, the classical degauss technique is used.

For a machine working always at the same beam energy, few cycles at beam energy will degauss the magnets. Example LHC precycle.

For machine or transfer line with different beam energies, the degauss has to take place at each cycle. Solution, always go at full saturation in each cycle.

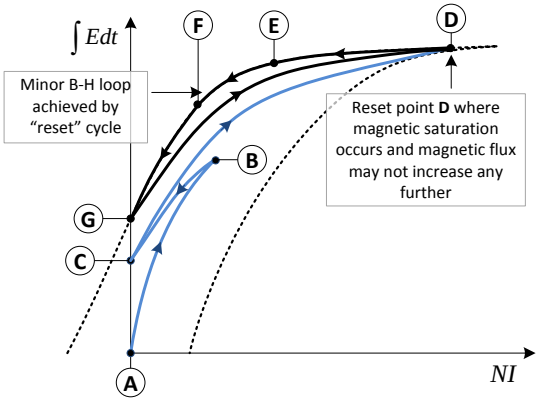

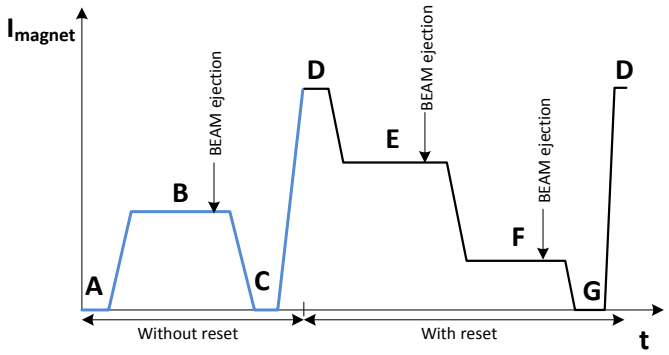

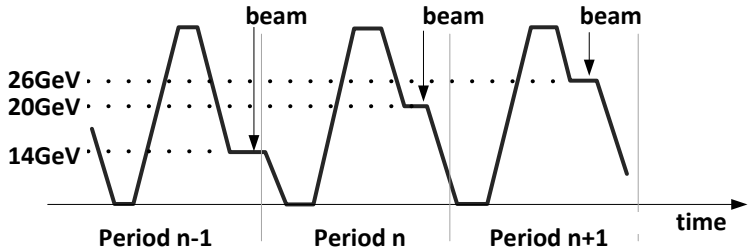

What is special for magnet powering ?

Measuring the magnetic field is very difficult and need a magnet outside the tunnel.

In most of the synchrotrons, all the magnets (quadrupole, sextupole, orbit correctors,…) are current control and the beam energy is controlled by the dipole magnet current.

For higher performance, the solutions are :

- Get a high-precision magnetic field model (10^{-4})
- Real time orbit feedback system
- Real time tune feedback
- Real time chromaticity feedback
- Or
- Real-time magnetic field measurement and control (10^{-4})

How an operator change the beam energy with a synchrotron?

To ramp up, the operator increases the dipole magnetic field.

The radiofrequency is giving the energy to the beam, but the RF is automatically adjusted to follow the magnetic field increase (Bdot control).

Magnet powering scheme

To get the same B-field in all the magnets, the classical solution is to put all the magnets in series.

Generally done with dipole and quadrupole.

Example of SPS quadrupole

Lead to high power system for Dipole and quadrupole.

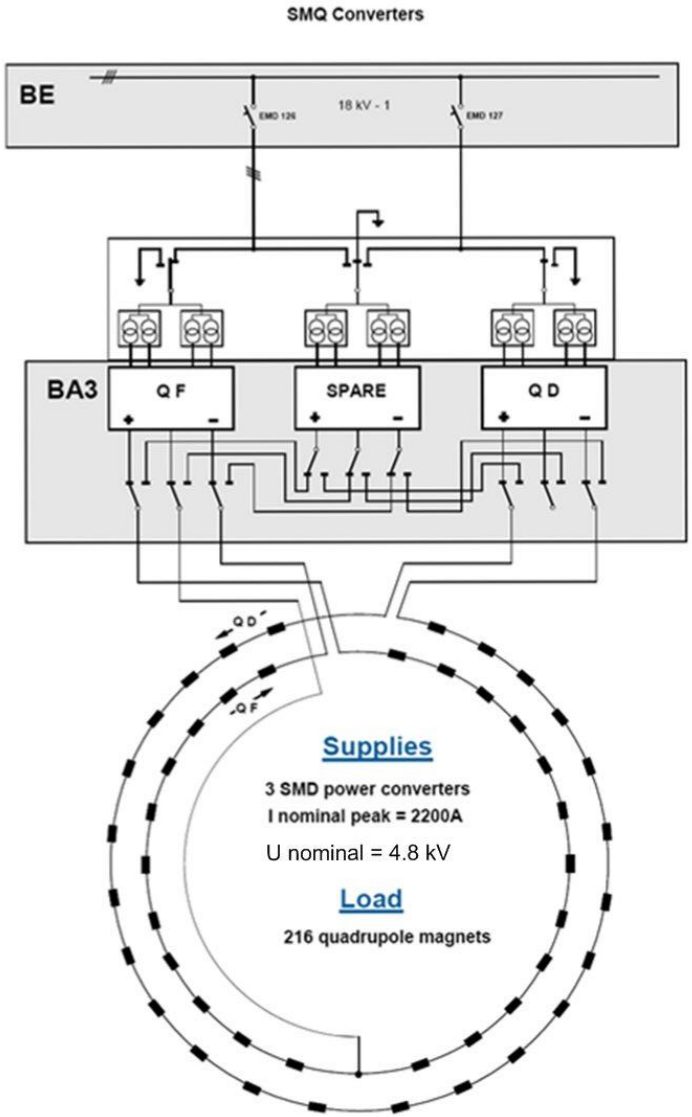

Magnet powering scheme

But when the power is becoming too high, the circuit can be split.
First time with LHC in 8 sectors.

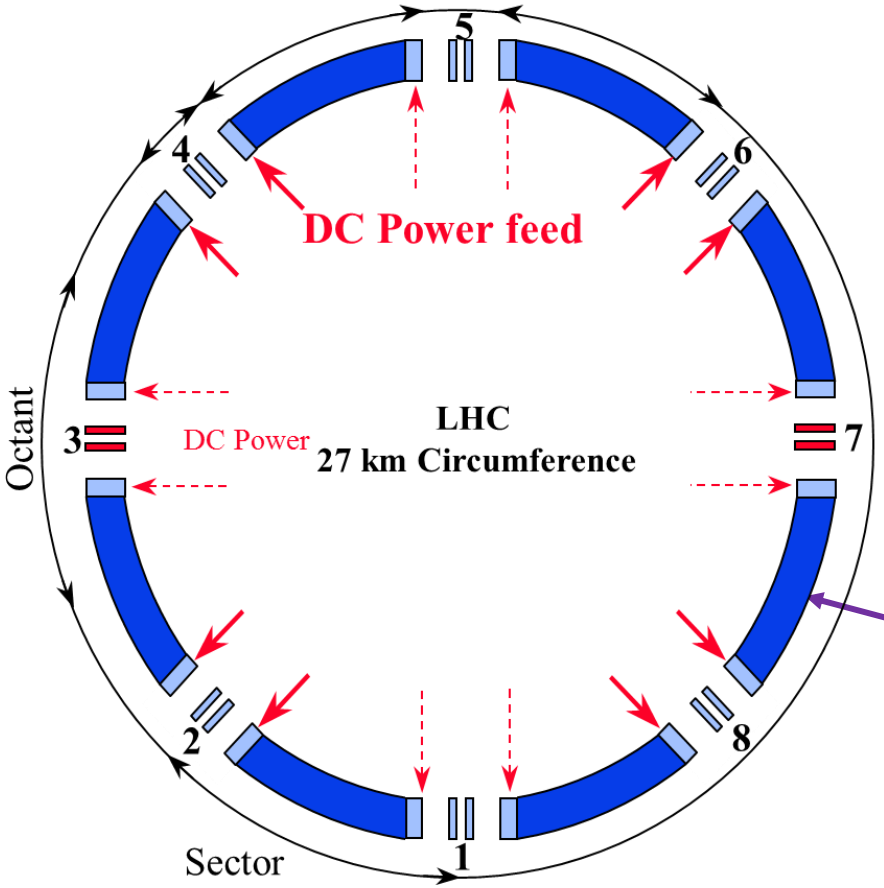

Tracking between sector !

Powering Sector:

154 dipole magnets
total length of 2.9 km

Magnet powering scheme

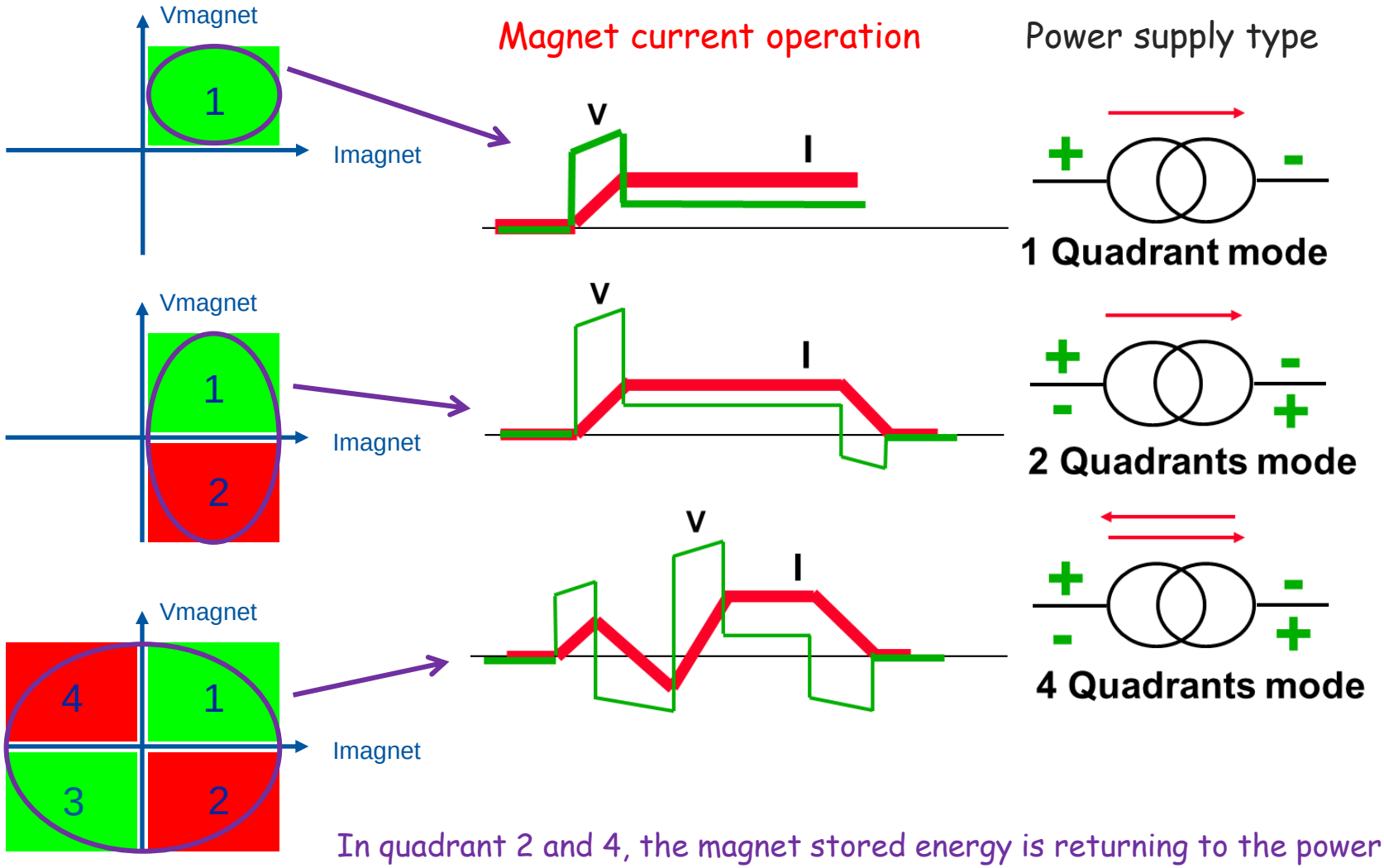

In quadrant 2 and 4, the magnet stored energy is returning to the power supply.

$E_{magnet} = 0.5 * L_{magnet} * I^2$

What is special for magnet powering ?

The magnet power supplies are high-precision current control.

To build it, the technical solutions are out the industrial standard:

- Need very low ripple
- Need current and voltage control over large range
- Operation in 1-2-4 quadrant

} Special topologies

- Need high-precision measurement
- Need high-performance electronics
- Need sophisticated control and algorithm

} Special electronics and control

Powering a magnet isn't classical, and few one the shelf product can be used

always custom power supplies

What is power electronics?

Power electronics

Power electronics is the application of solid-state electronics for the control and conversion of electric power.

Power electronics started with the development of mercury arc rectifier. Invented by Peter Cooper Hewitt in 1902, the mercury arc rectifier was used to convert alternating current (AC) into direct current (DC).

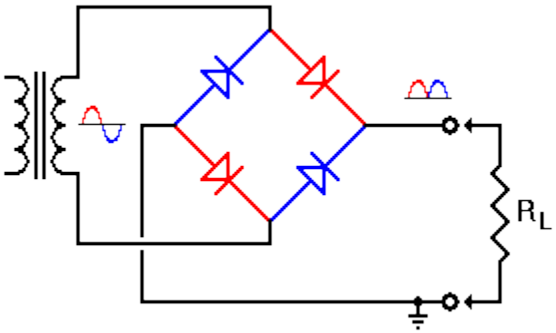

The power conversion systems can be classified according to the type of the input and output power

- AC to DC (rectifier)
- DC to AC (inverter)
- DC to DC (DC-to-DC converter)
- AC to AC (AC-to-AC converter)

Switching devices

Nowadays, the main power semiconductors are:

- Diode
- MOSFET
- IGBT
- Thyristor

The most popular is the IGBT

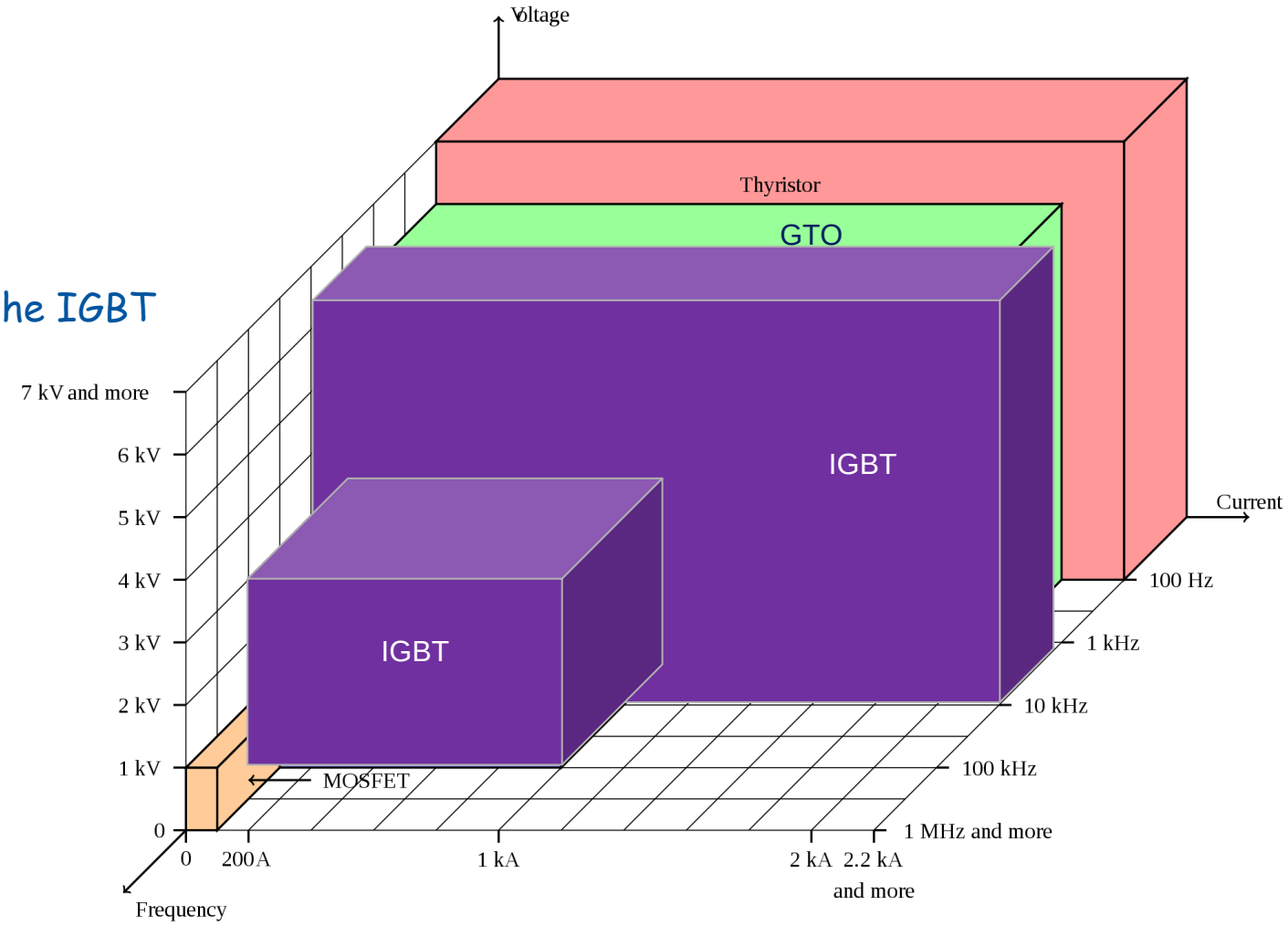

Thyristor principle

Thyristor (1956): once it has been switched on by the gate terminal, the device remains latched in the on-state (*i.e.* does not need a continuous supply of gate current to remain in the on state), providing the anode current has exceeded the latching current (I_L). As long as the anode remains positively biased, it cannot be switched off until the anode current falls below the holding current (I_H).

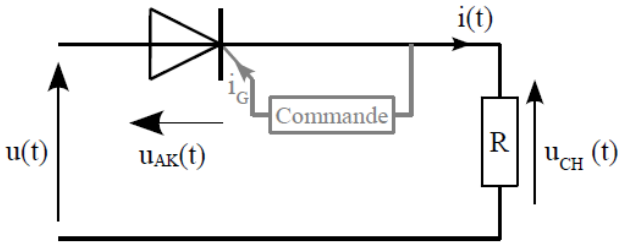

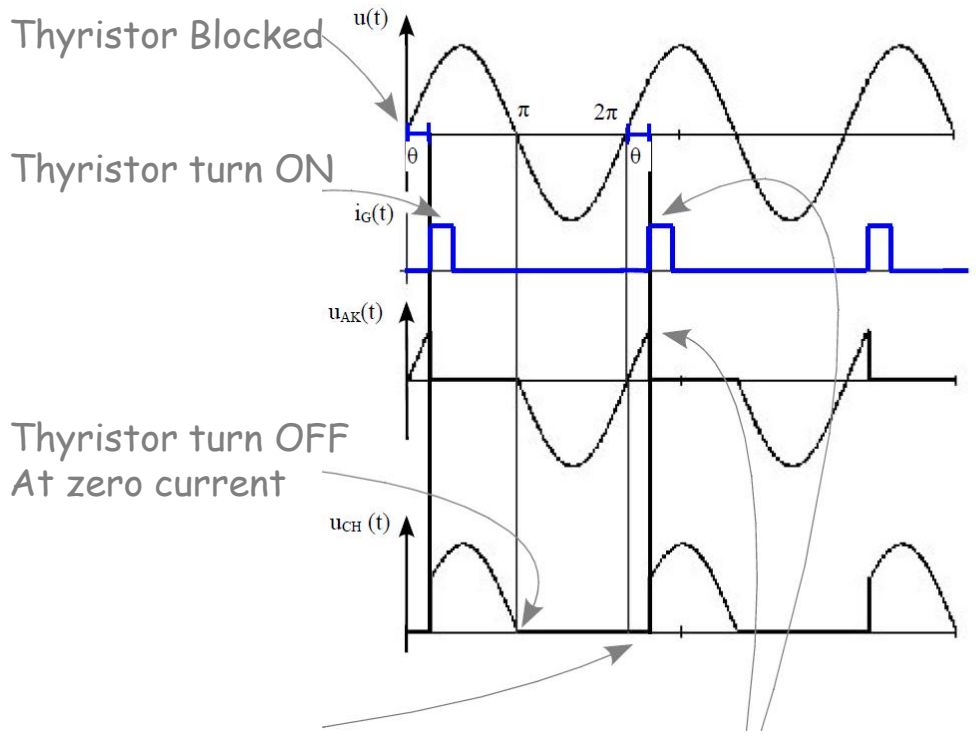

Turn ON possible when positive voltage

Topologies based on thyristor

The magnets need DC current.
The magnet power supplies are AC/DC.
The magnets need a galvanic isolation from the mains: 50Hz transformer

→ The thyristor bridge rectifier is well adapted to power magnets.

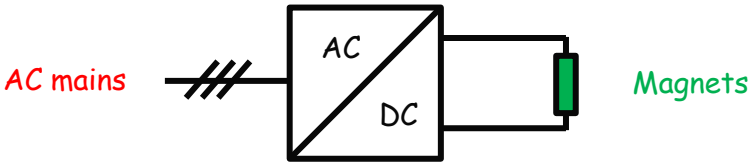

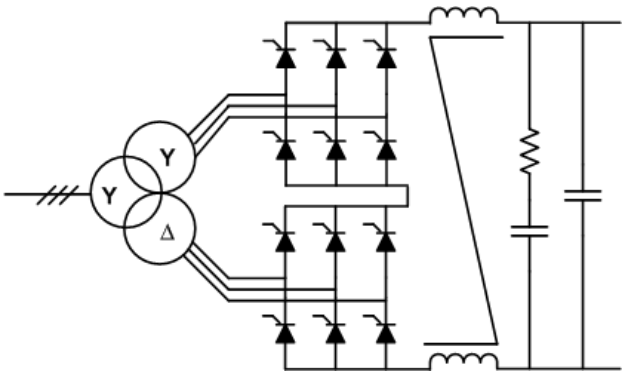

Thyristor advantages
- Very robust
- Cheap
- Low losses

Thyristor drawbacks
- Sensible to mains transients
- Low losses
- Low power density

Diode bridge rectifier

- 3 phases diode bridge voltage rectification
  - Bridge output voltage is fixed, 1.35 * $U_{\text{line to line}}$

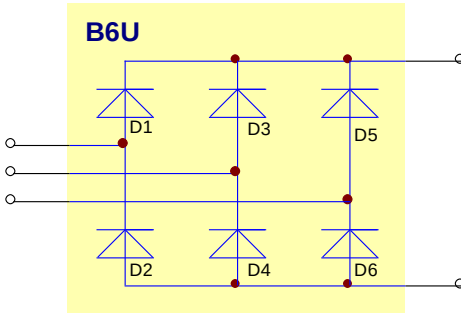

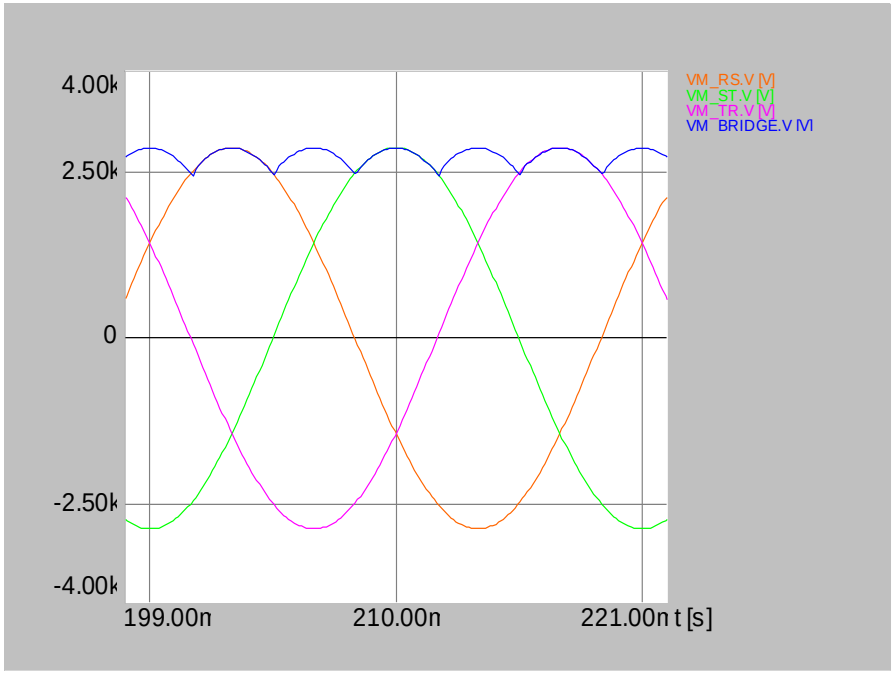

Thyristor bridge rectifier

- 3 phases Thyristor bridge voltage rectification
  - Can control the bridge output voltage by changing the firing angle α
  - Vout = Umax * cos α
    - α = 15°, Vout = 0.96 * Umax
    - α = 70°, Vout = 0.34 * Umax
    - α = 150°, Vout = -0.86 * Umax

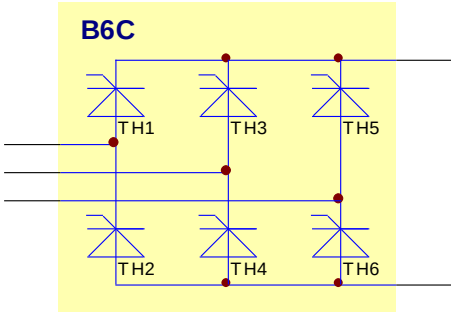

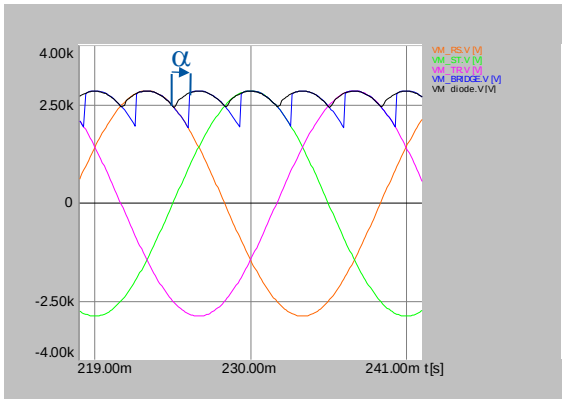

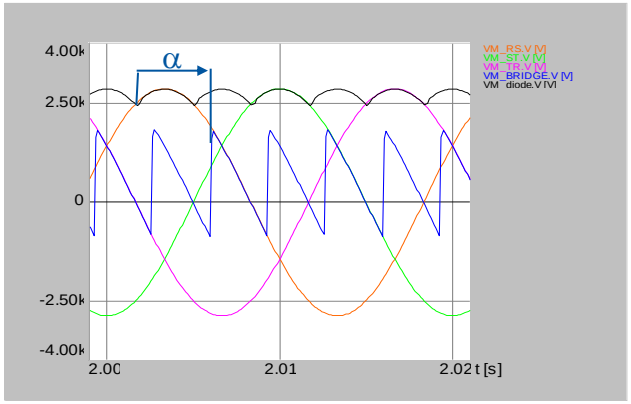

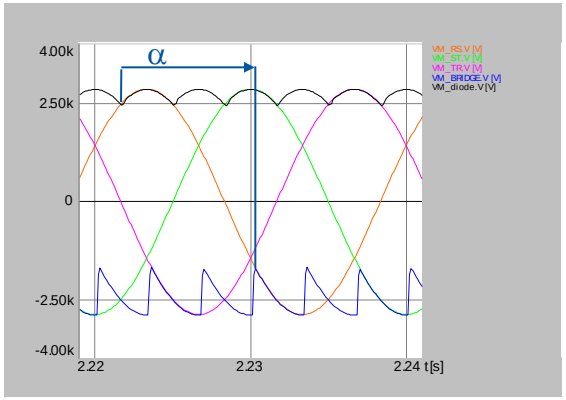

Thyristor bridge rectifier

- Maximum voltage, α = 15°

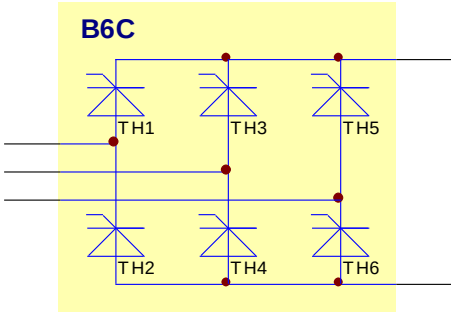

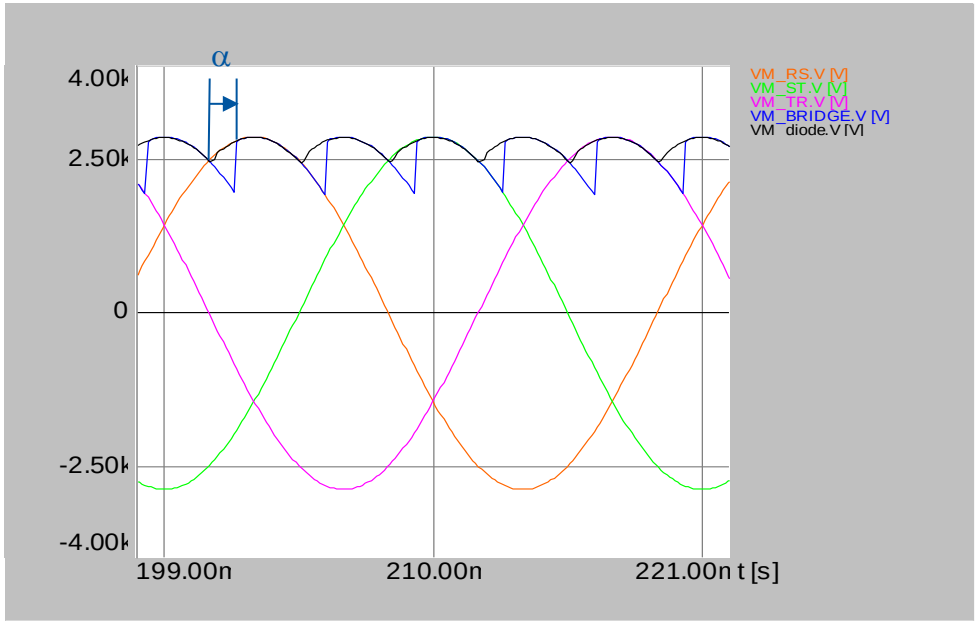

Thyristor bridge rectifier

- Transformer line current at maximum voltage, α = 15°
  - The diode bridge current is in phase with the voltage
  - For the thyristor rectifier, the AC line current is shifted with the angle α

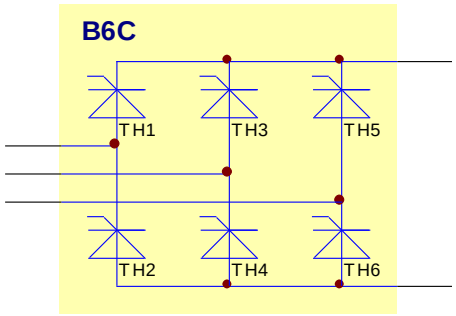

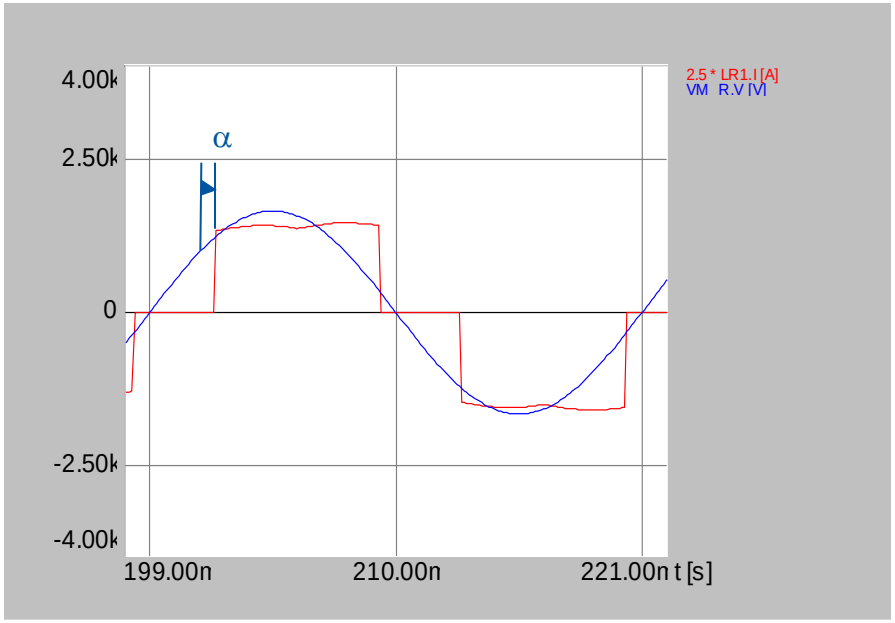

Thyristor bridge rectifier

- Power analysis
  - Power: $P(t) = V_r(t) * I_r(t) + V_s(t) * I_s(t) + V_T(t) * I_T(t)$
  - Active power: $P = 3 * V_r * I_{Line\ rms} * \cos \alpha$
  - Reactive power: $Q = 3 * V_r * I_{Line\ rms} * \sin \alpha$
  - Apparent power: $S = \sqrt{P^2 + Q^2}$
  - Power factor: $P/S = \cos \alpha$

- $\alpha = 15°$
  - Active power high
  - Reactive power low

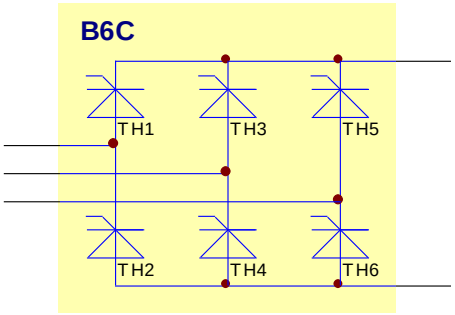

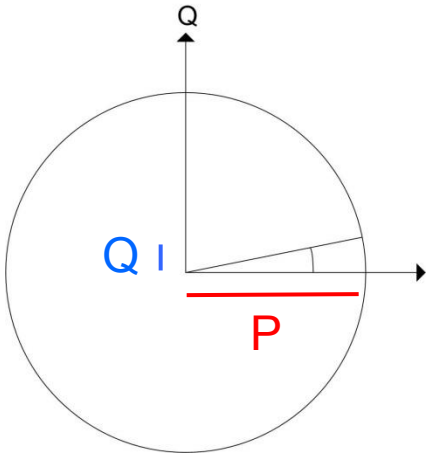

Thyristor bridge rectifier

- At flat top, α = 70°

Full current / low DC voltage

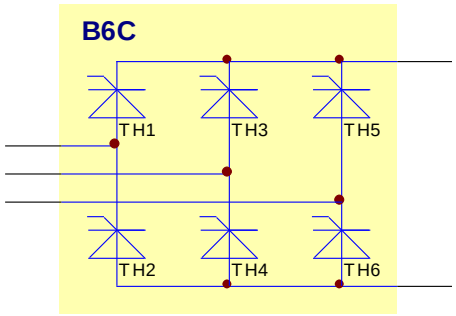

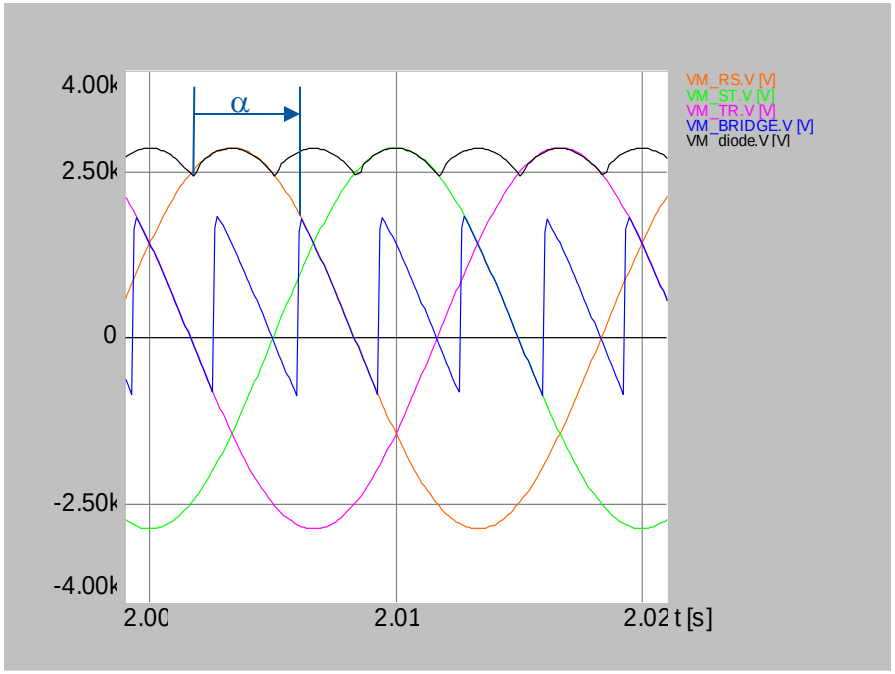

Thyristor bridge rectifier

- Transformer line current at flat top (at α = 70°)

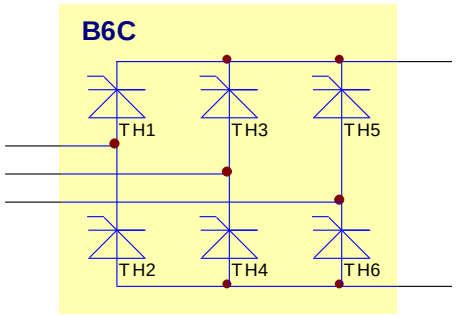

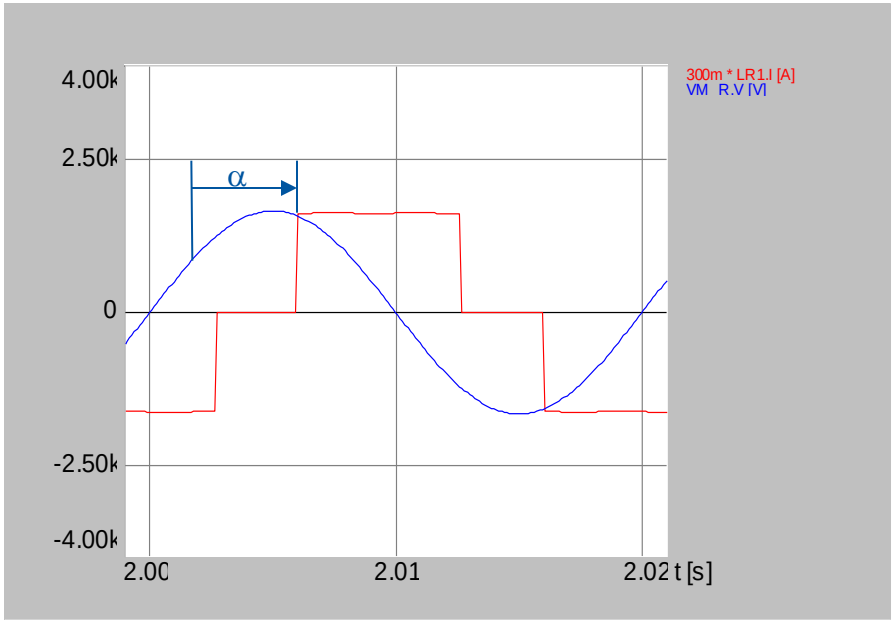

Thyristor bridge rectifier

- Power analysis
  - Active power: $P = 3 * V_r * I_{Line\ rms} * \cos \alpha$
  - Reactive power: $Q = 3 * V_r * I_{Line\ rms} * \sin \alpha$
  - Apparent power: $S = \sqrt{P^2 + Q^2}$

  - $\alpha = 70°$
    - Active power low
    - Reactive power high

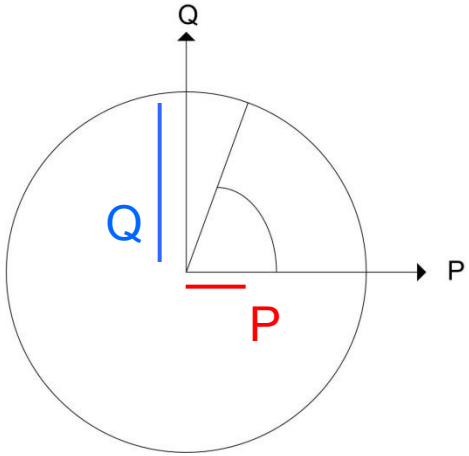

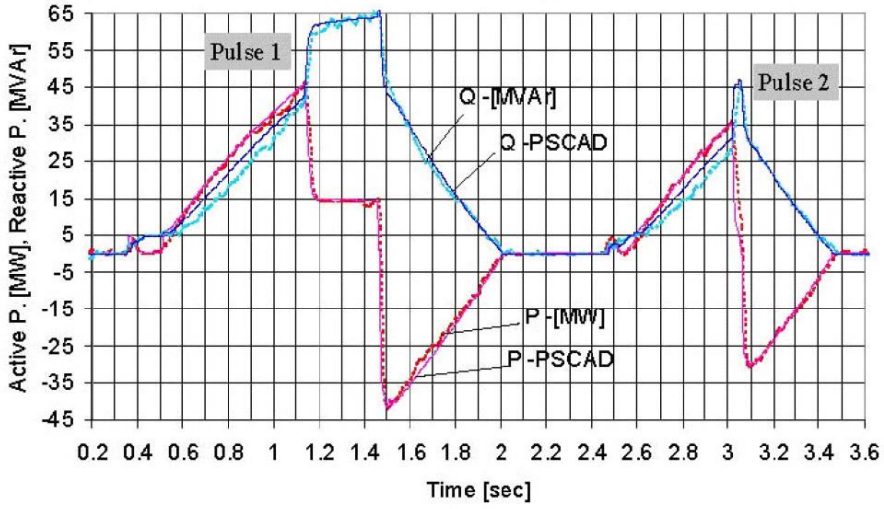

Reactive power compensation

Reactive power must be compensated.

Power factor > 0.93 for EDF.

Affect the mains voltage stability.

Solution :SVC: Static VAR Compensator, Qc

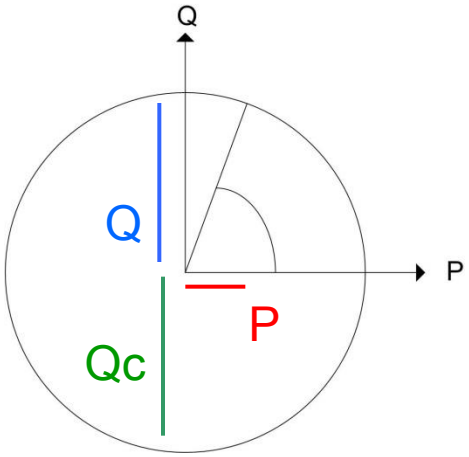

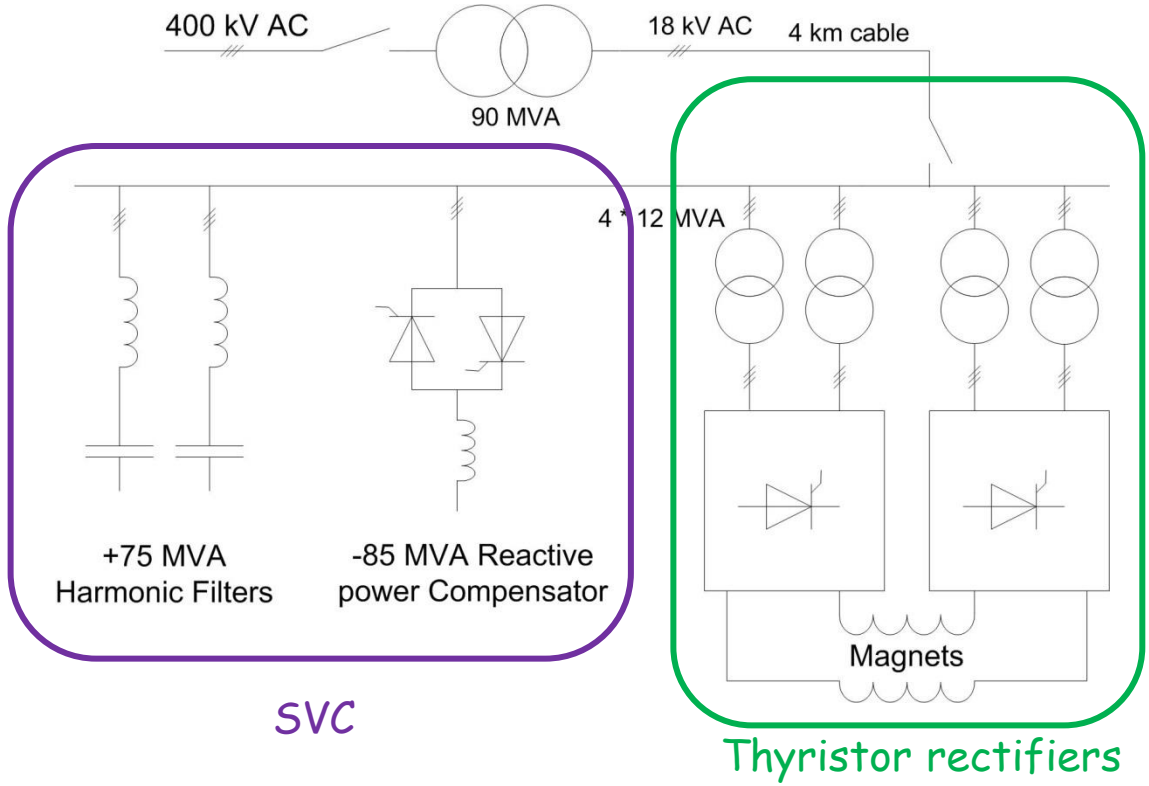

Reactive power compensation

SVC role on the 18kV

- Compensate reactive power (Thyristor Controlled Reactor)
- Clean the network (harmonic filters)
- Stabilize the 18kV network (>±1%)

Thyristor rectifier example

Example: LHC dipole converter 13kA/180V

Magnet: L = 15.7H
R = 0.001Ω
Iultimate = 13kA

Magnet operation:
Iinjection = 860A
dI/dt = ±10A/s
I_{4TeV} = 6.9kA
I_{7TeV} = 11.8kA
Magnet protected by external dump resistor

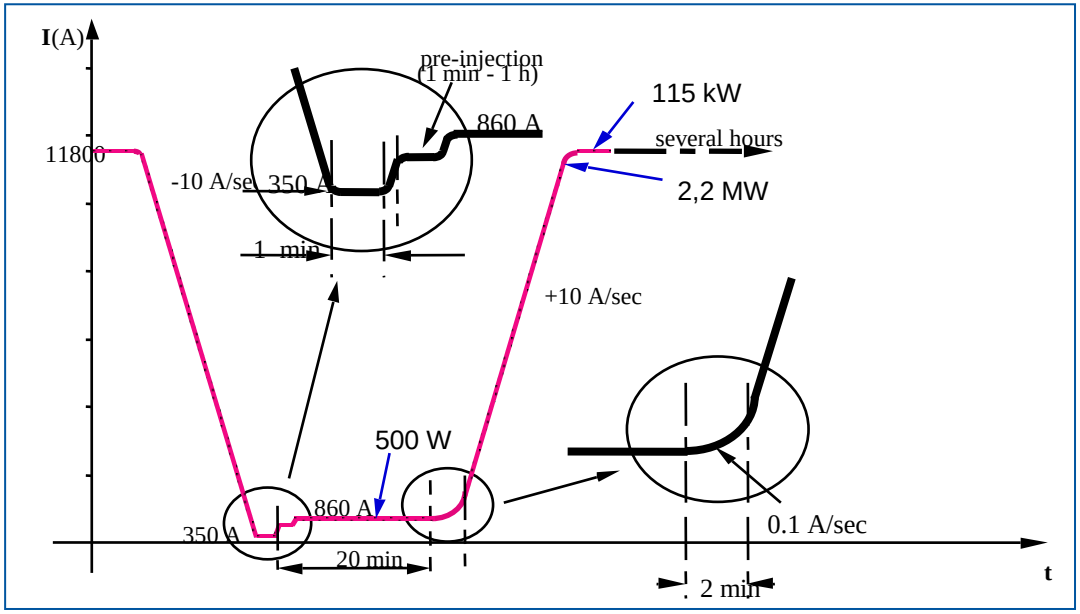

Thyristor rectifier example

Example: LHC dipole converter 13kA / 180V

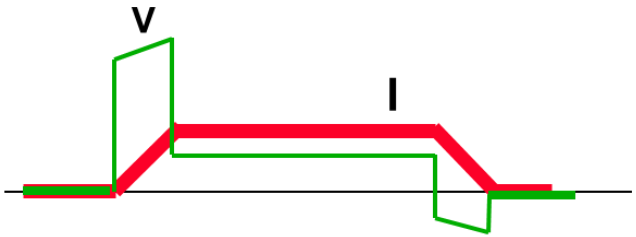

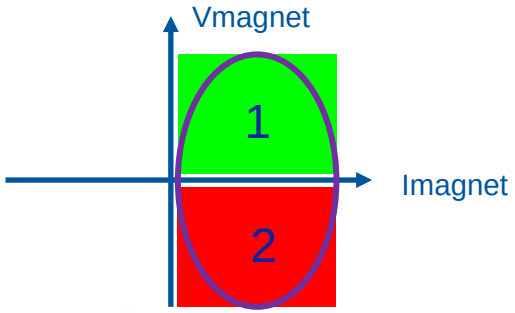

18kV AC

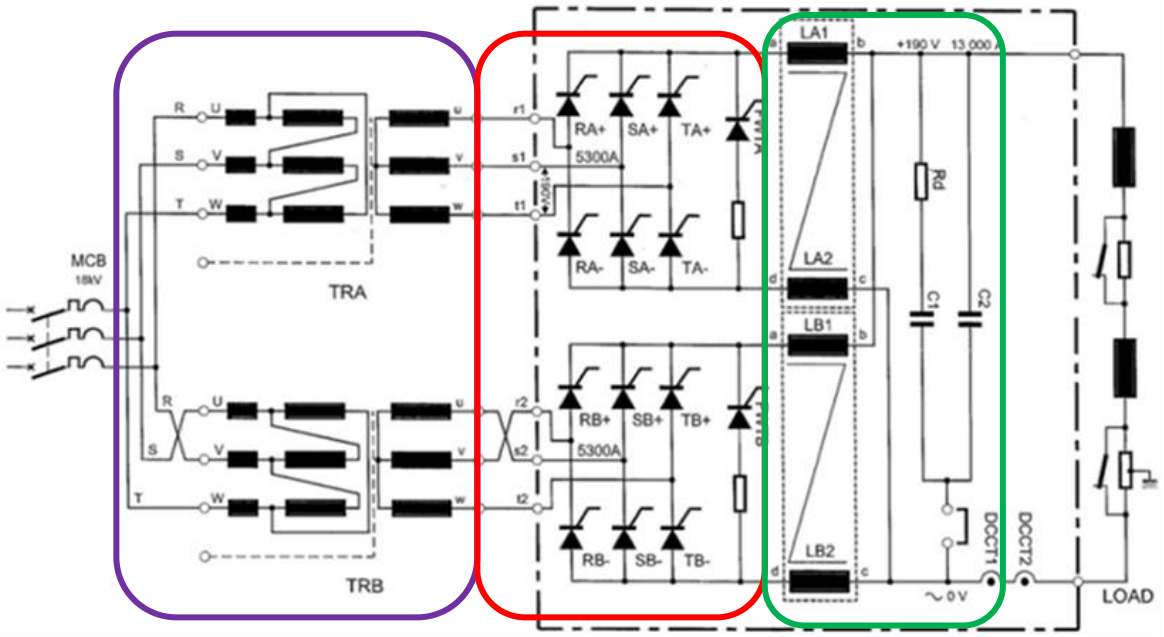

Magnets

50Hz transformer

Output filter

Thyristor rectifier

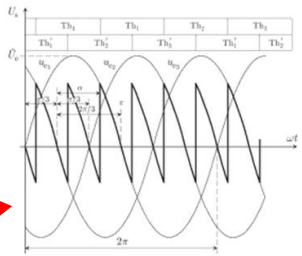

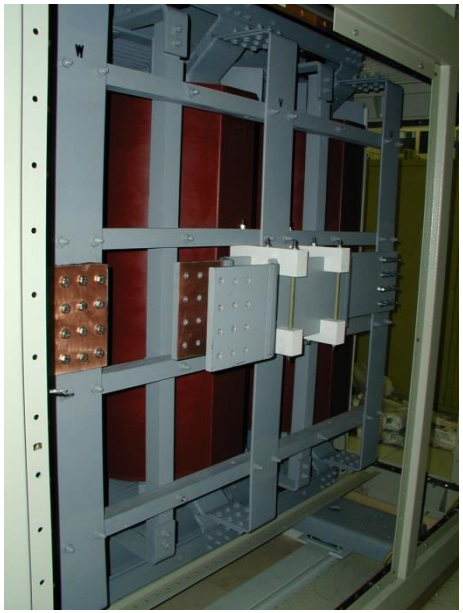
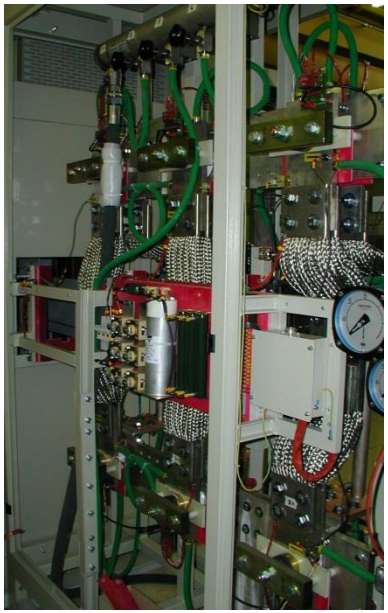
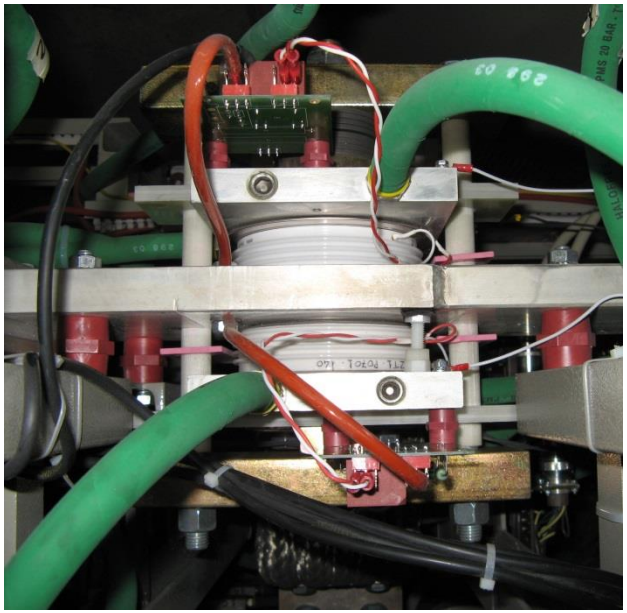

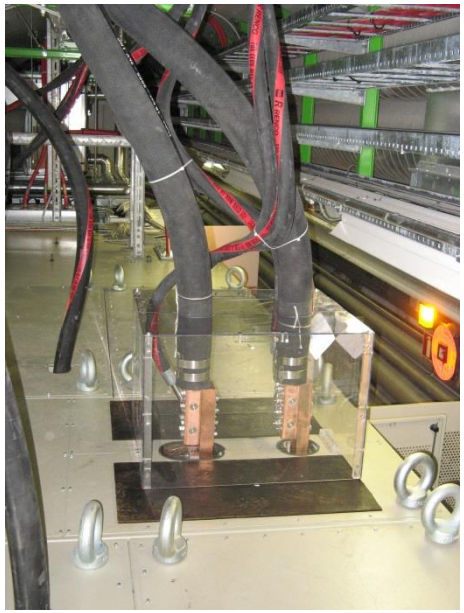

Thyristor rectifier

Limitation a low current due to discontinuity of current

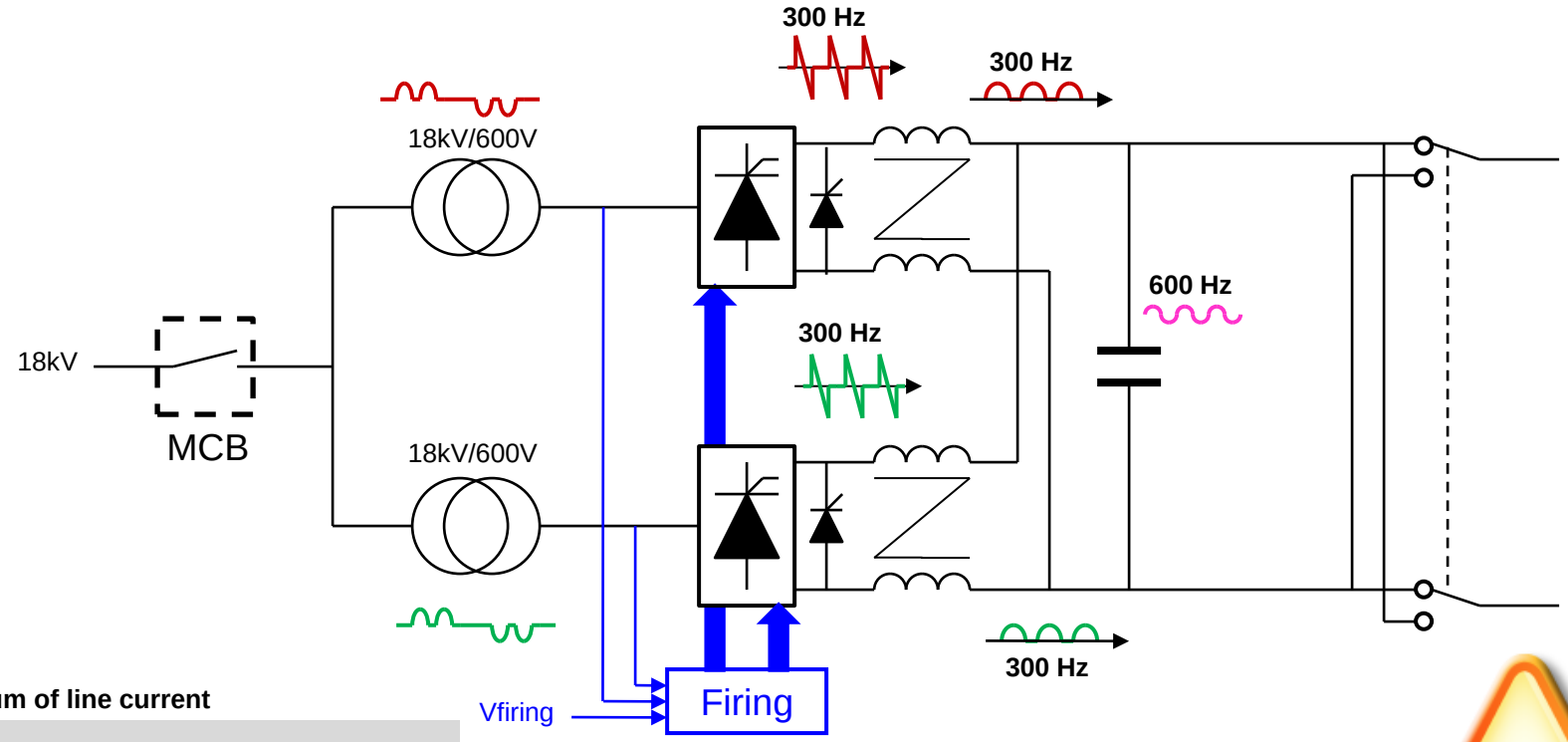

Sum of line current

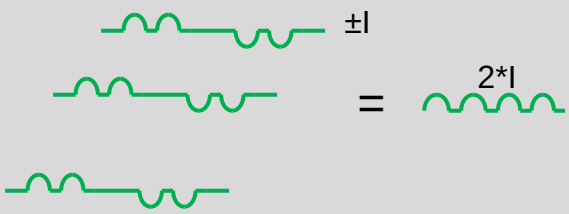

Sum of bridge voltages

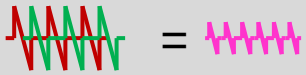

Minimum current

Topologies based on IGBT

What is an IGBT ?

The IGBT combines the simple gate-drive characteristics of the MOSFETs with the high-current and low-saturation-voltage capability of bipolar transistors.

The main different with thyristor is the ability to control its turn ON and turn OFF.

Many topologies can be built using IGBT.

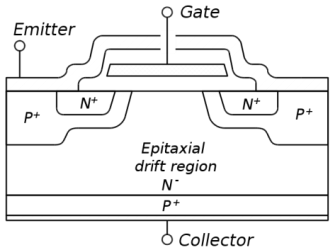

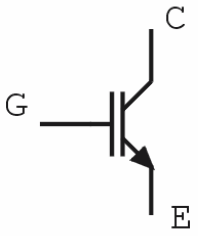

10A

200A

1kA

3kA

IGBT

Real IGBT turn-on and turn-off:

Very fast di/dt, dv/dt => EMC

Switching losses => thermal limitation

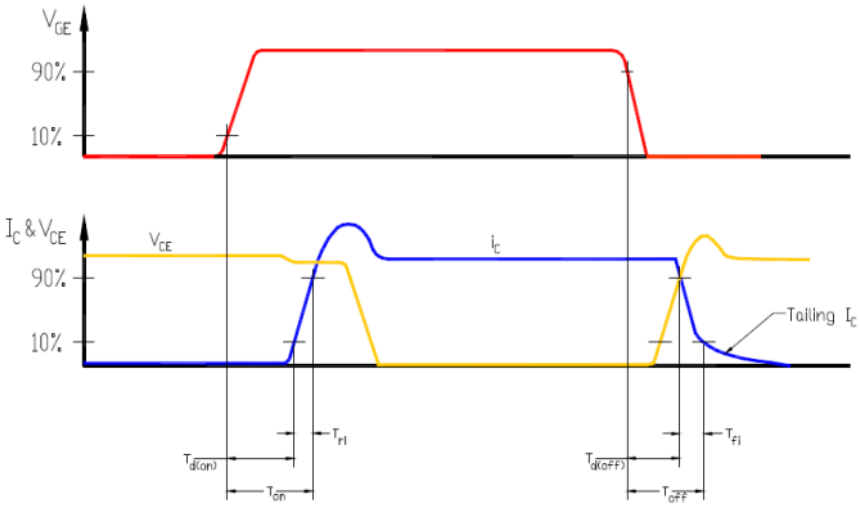

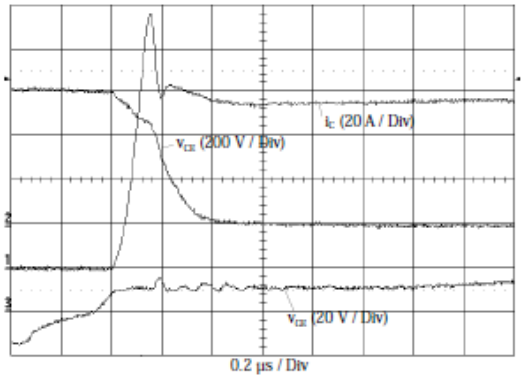

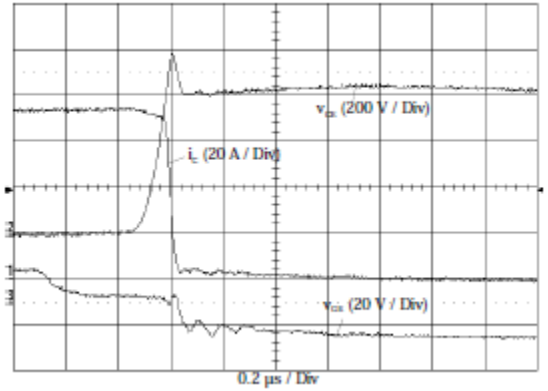

IGBT

Number of cycles

Thermal cycling of the IGBT

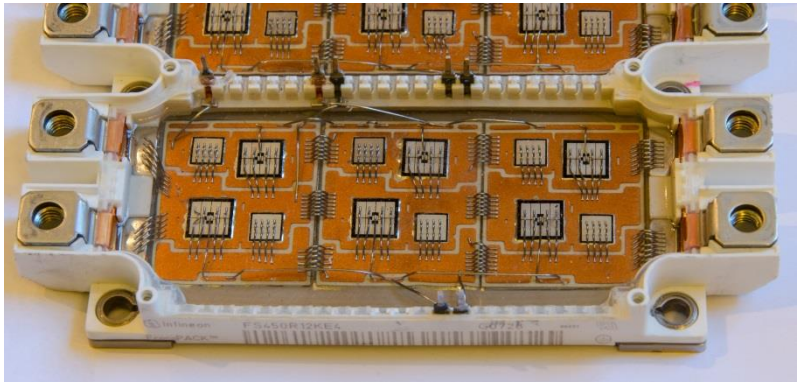

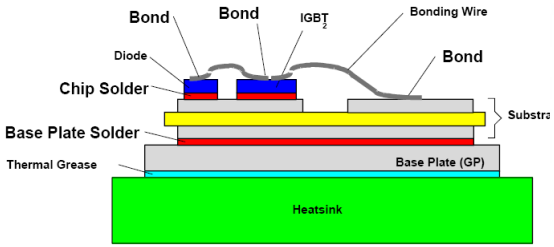

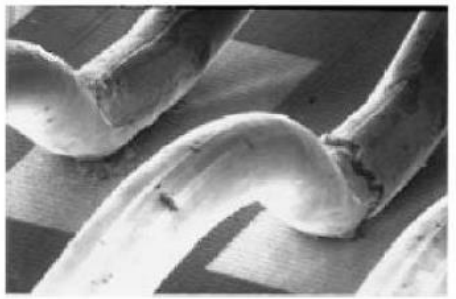

IGBT bonding can break after few thousand of thermal cycles

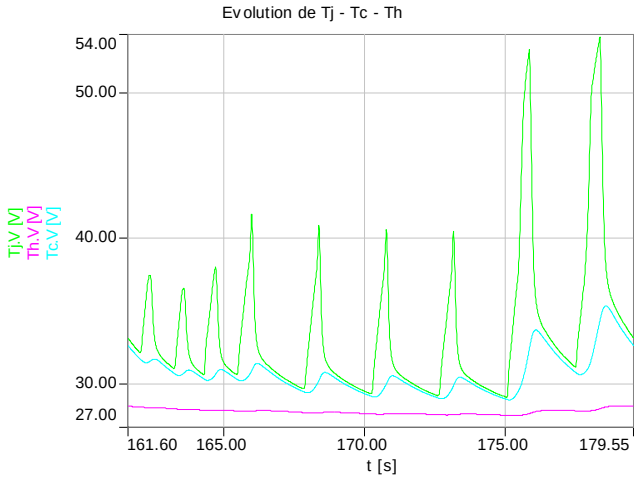

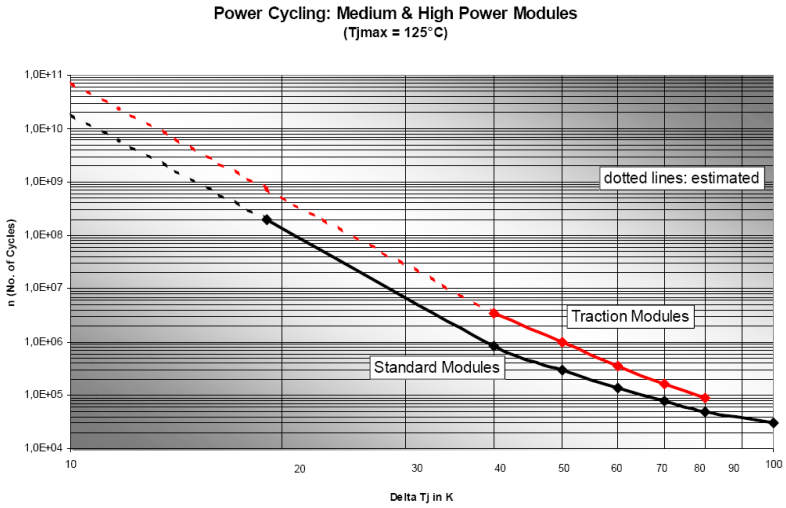

Power electronics basic concept

The basic principle is to command a switch to control the energy transfer to a load.
Example of a BUCK converter:

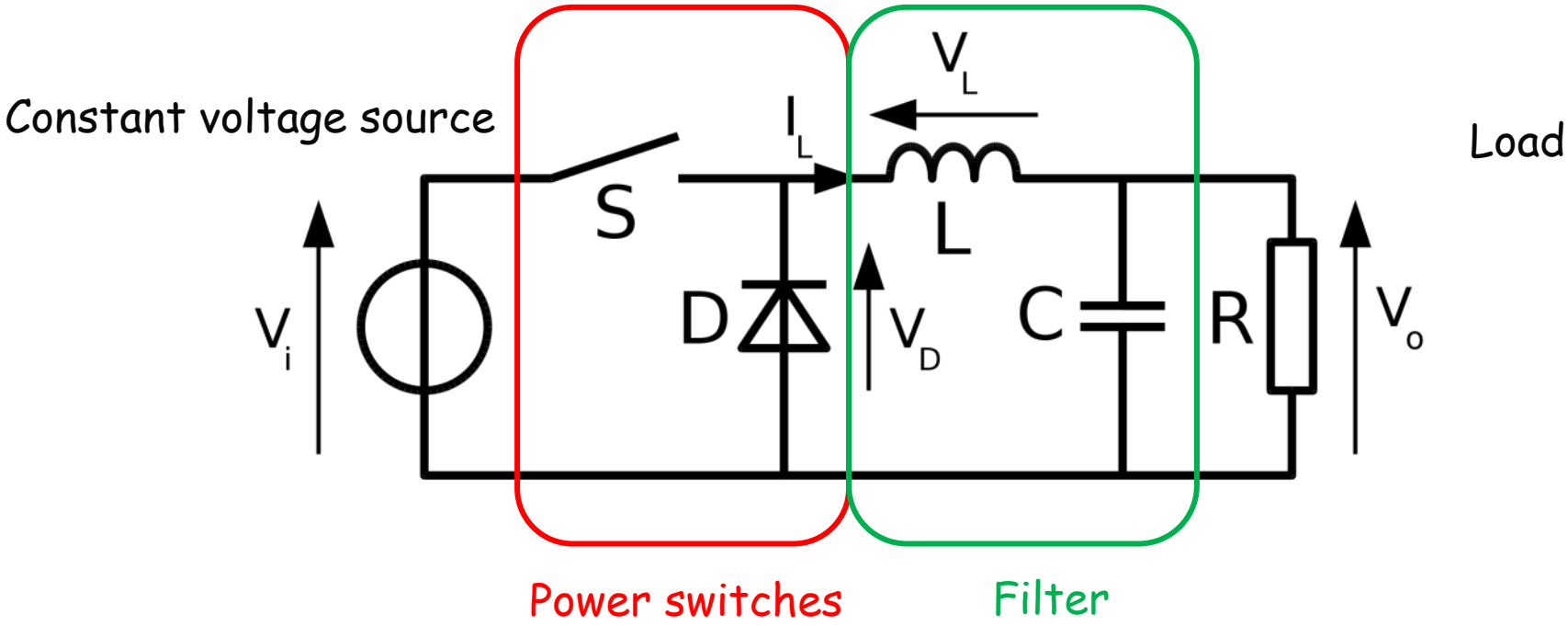

Power electronics basic concept

The switch S is switched ON during a short period which is repeated periodically.

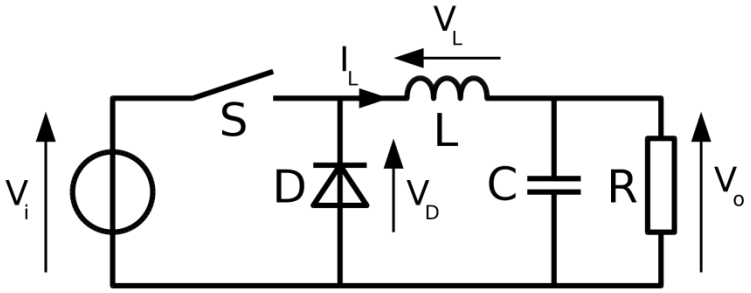

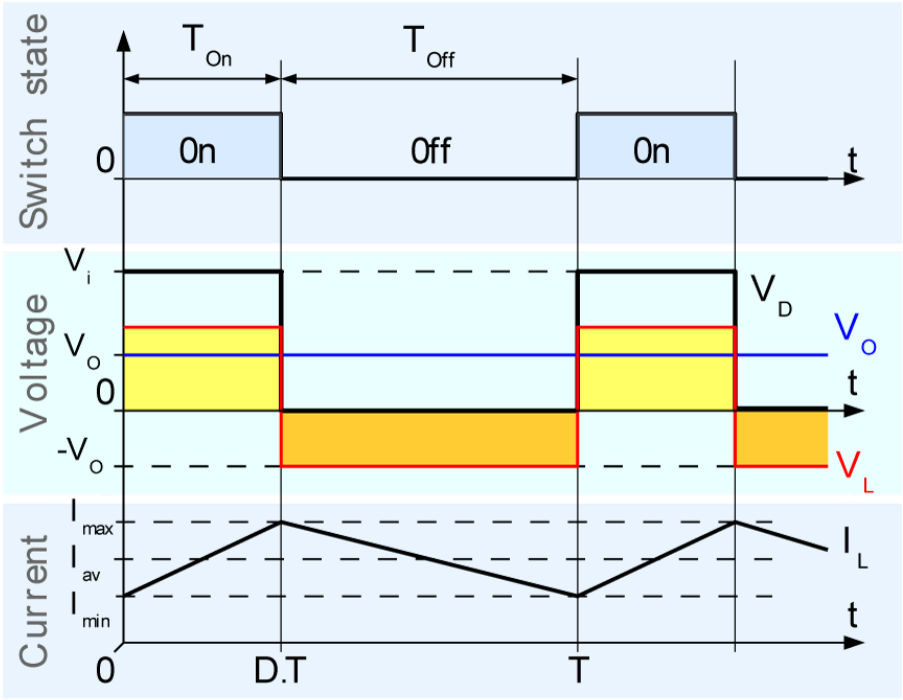

<Vo> = Ton/T × Vi

Vout = α × Vi

The output voltage can be controlled by playing with the duty cycle α.

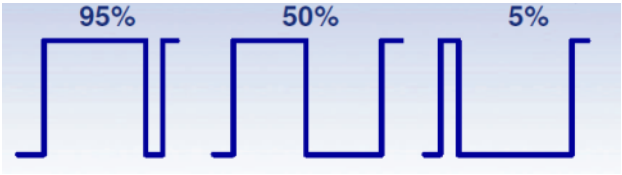

Power electronics basic concept

Most of the time, PWM (Pulsed Width Modulation) technique is used to control the switches. A triangular waveform is compared to a reference signal, which generates the PWM command of the switch.

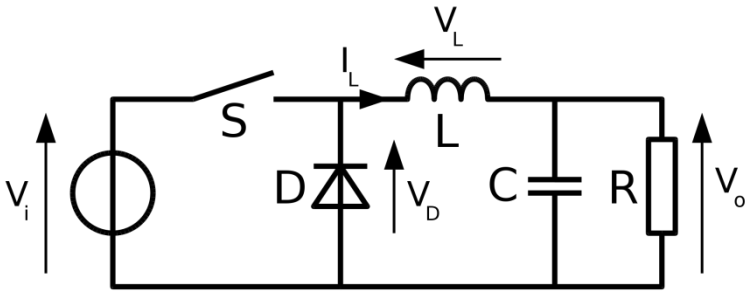

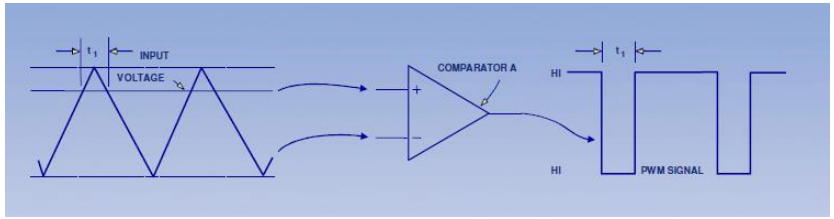

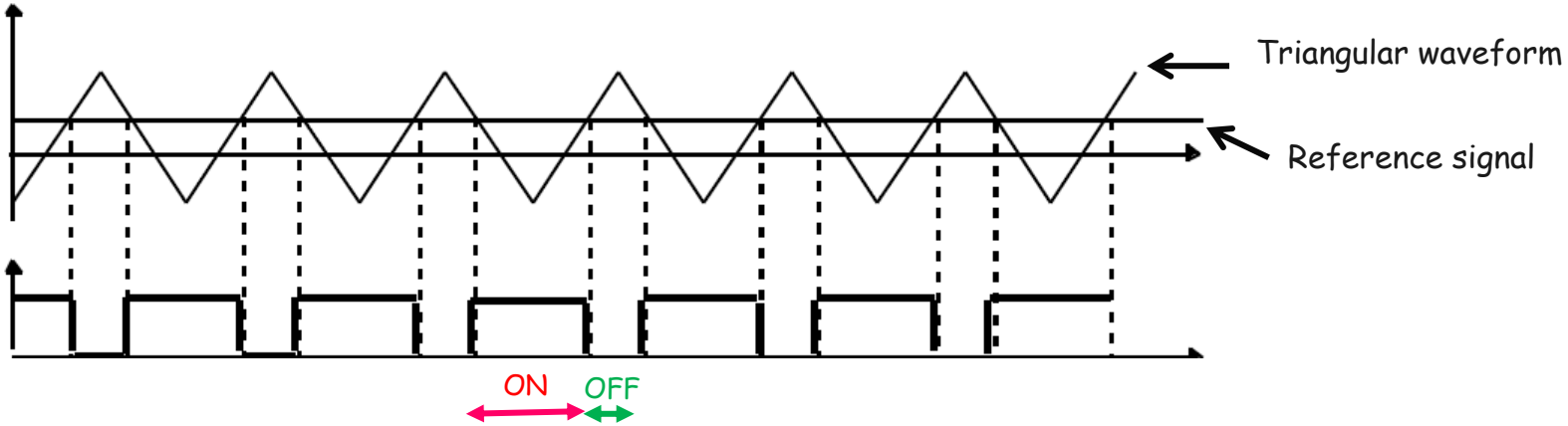

Topologies based on IGBT

The magnets need DC current.

The magnet power supplies are AC/DC.
The topologies are with multi-stages of conversion.

The magnets need a galvanic isolation from the mains: cases with 50Hz transformer

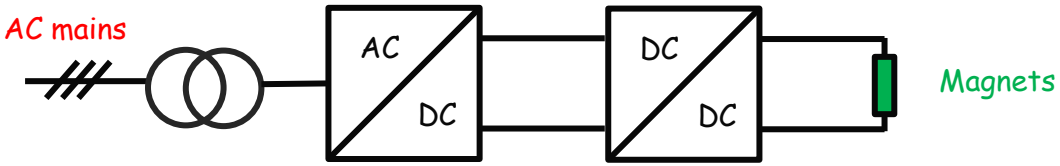

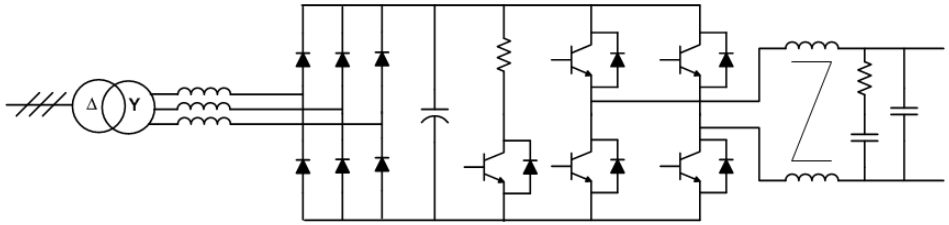

Switch-mode converters

Example: PS converter: PR.WFNI, ±250A/±600V

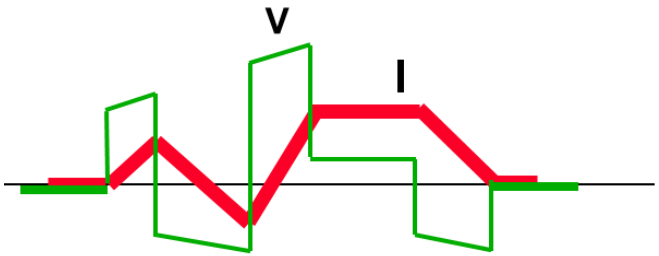

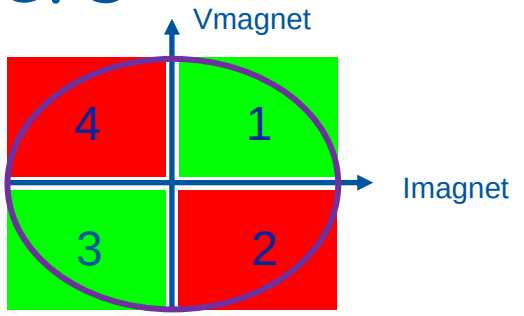

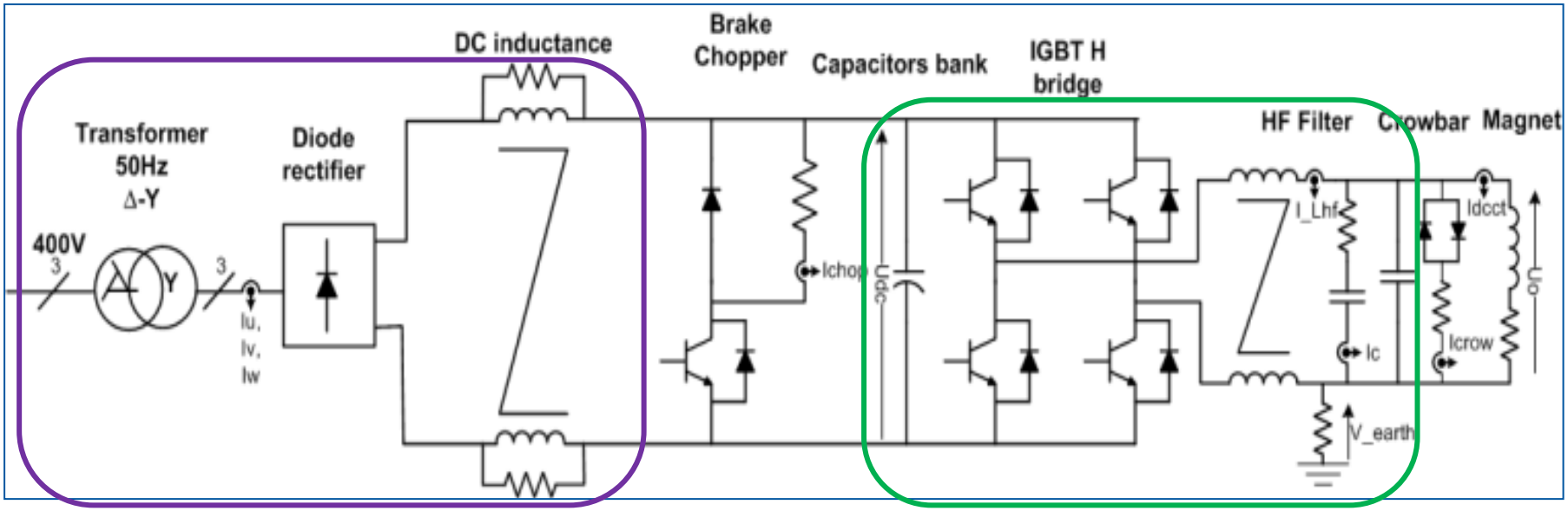

50Hz AC/DC stage

High-frequency DC/DC stage

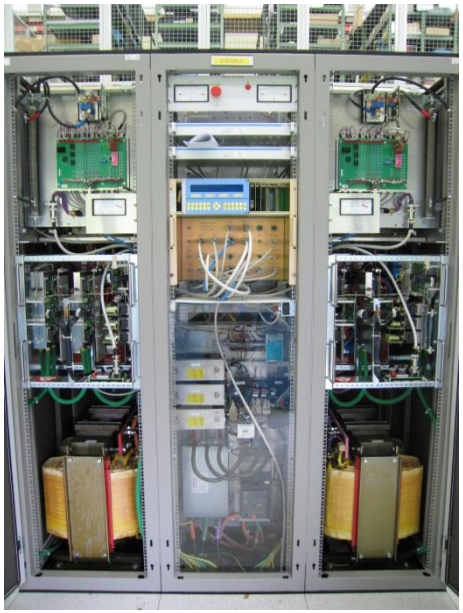

1
3
2
4

Transformer technologies

Two technologies are used for power transformers:

laminated magnetic core (like magnet):

- 50Hz technology
- High field (1.8T)
- Limitation due to eddy current
- Low power density
- High power range

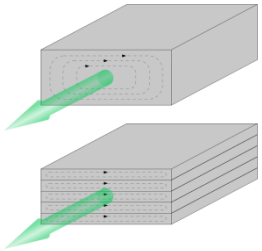

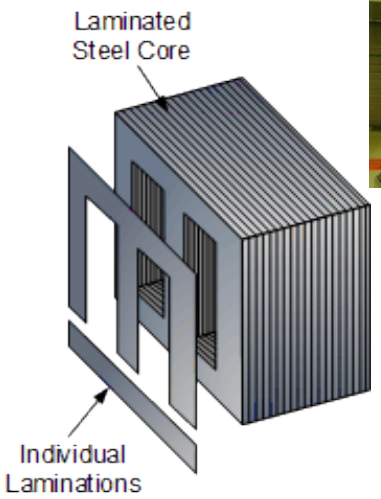

Ferrite core (like kicker):

- kHz technology
- Low field (0.3T)
- Nonconductive magnetic material, very low eddy current
- High power density
- Low power range (<100kW)

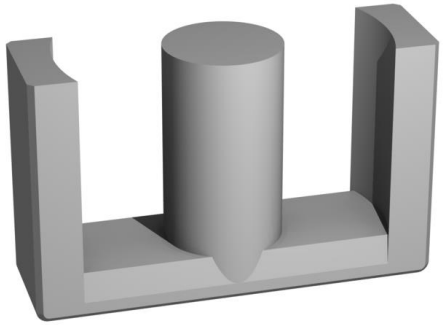

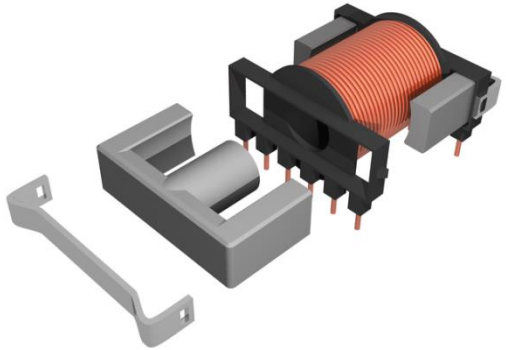

Topologies with HF transformer

In this case, it is multi-stages converter with high-frequency inverters

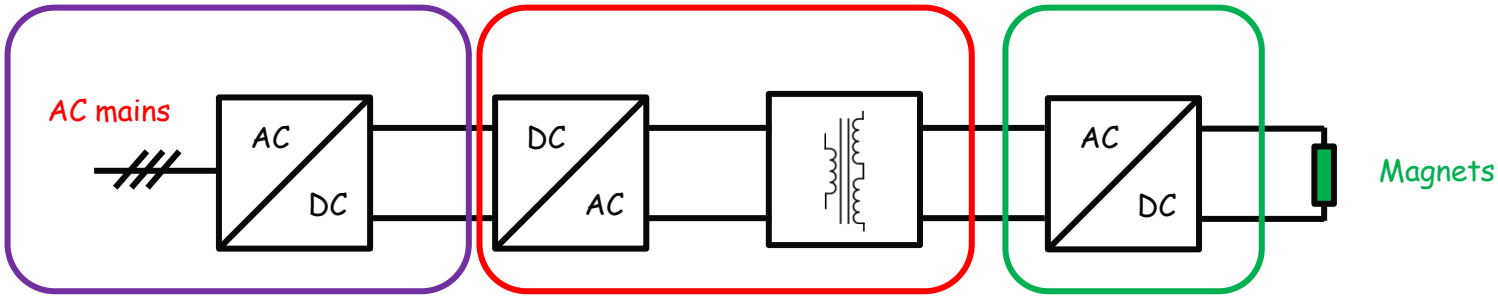

50Hz rectifier

HF inverters & transformer

HF rectifier & filter

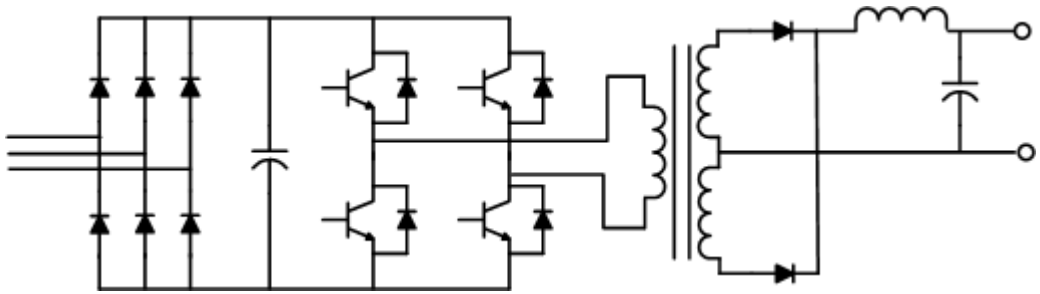

Switch-mode converter with HF inverter

Example: LHC orbit corrector, ±120A/±10V

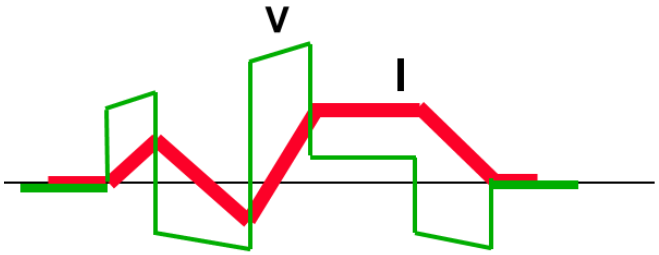

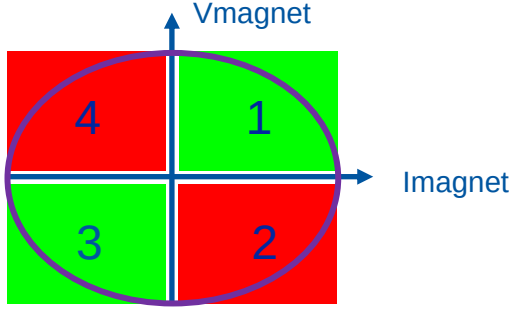

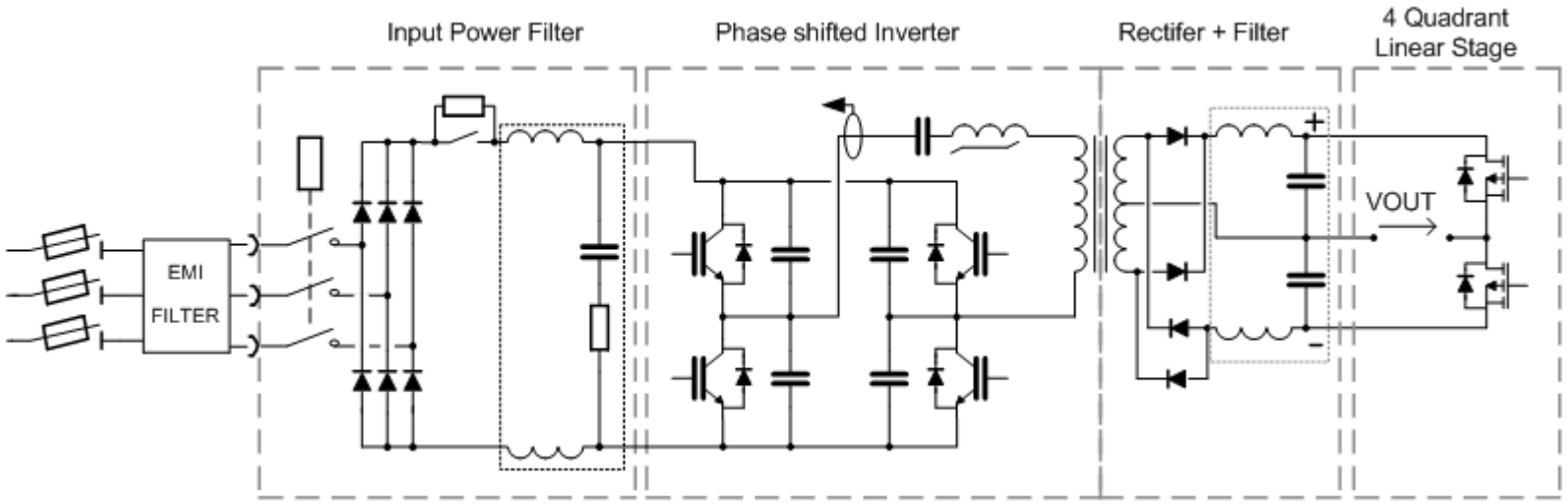

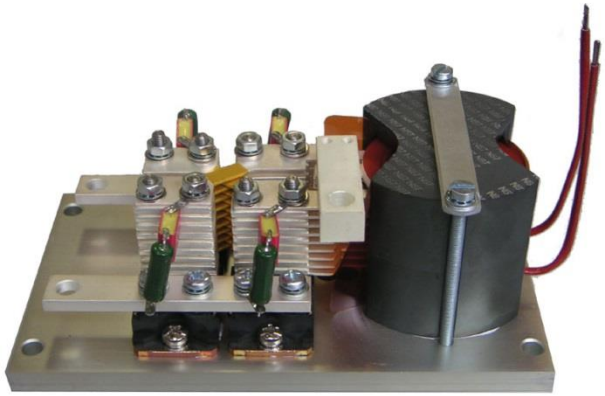

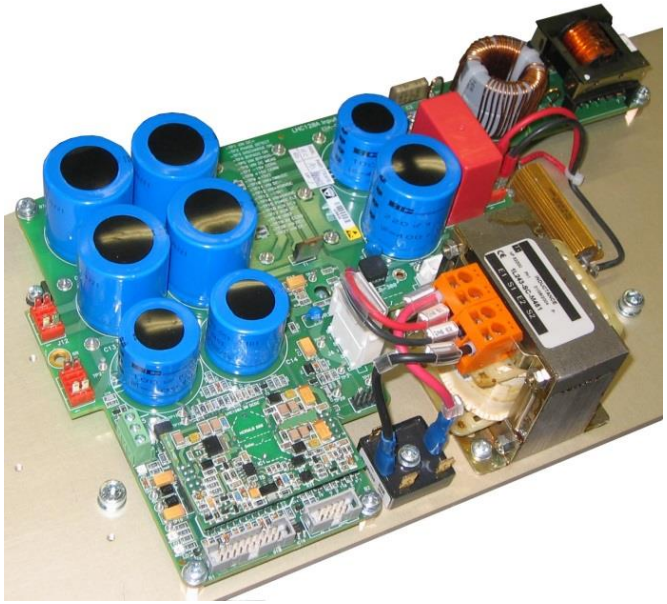

Converter association

When the power demand increases above the rating of the power semiconductor, the only solution is to build a topology with parallel or series connection of sub-system.

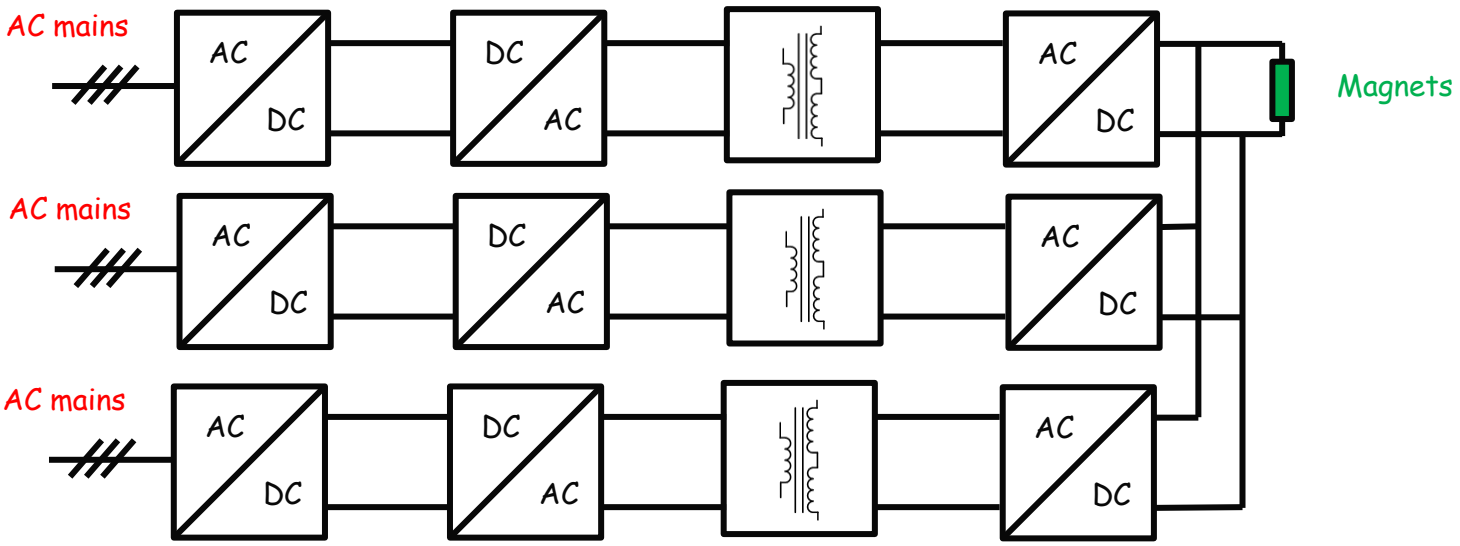

Parallel connection of sub-converters

Example: Atlas toroid magnet converter 20.5kA/18V

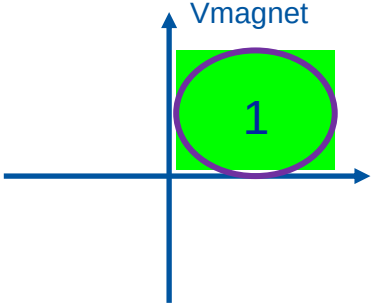

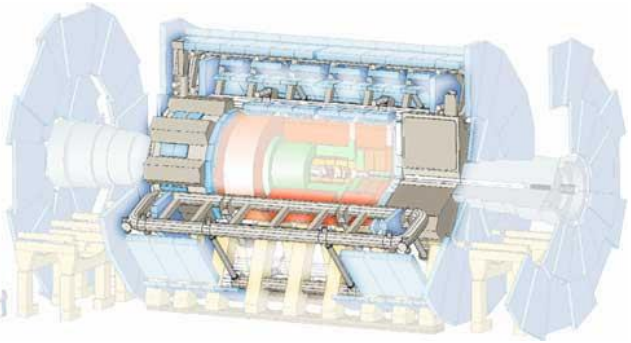

3.25kA/18V sub-converter

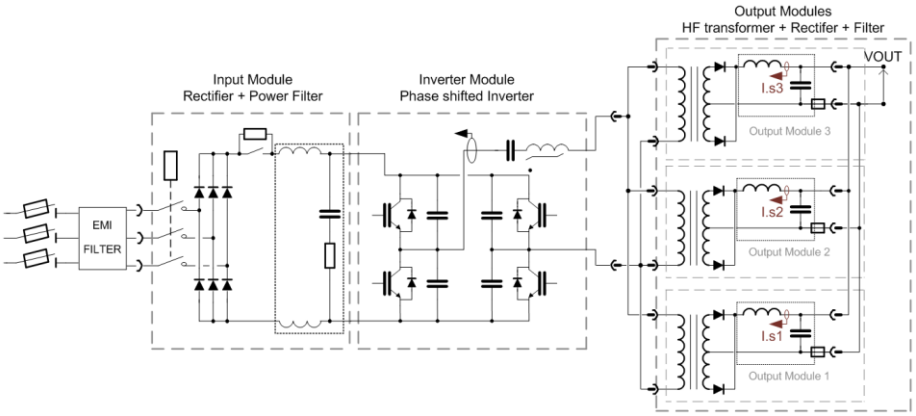

8 sub-converters in parallel

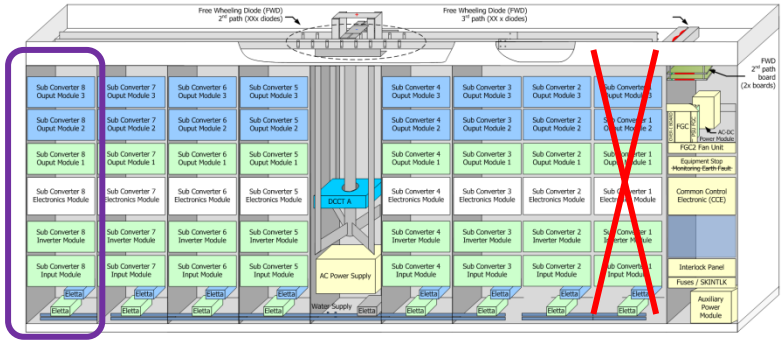

3.25kA/18V

Redundancy implementation, n+1 sub-converters

Can work with only n sub-converters

Sub. 8
Sub. 7
Sub. 6
Sub. 5
Power Connection Rack
TRANSTECHNIK
Sub. 4
Sub. 3
Sub. 2
Sub. 1
Electronics Rack

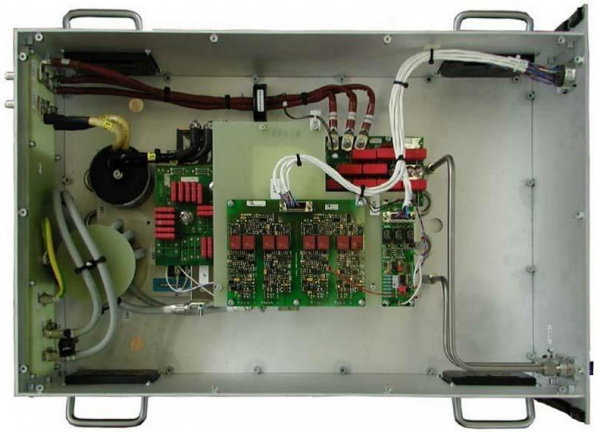

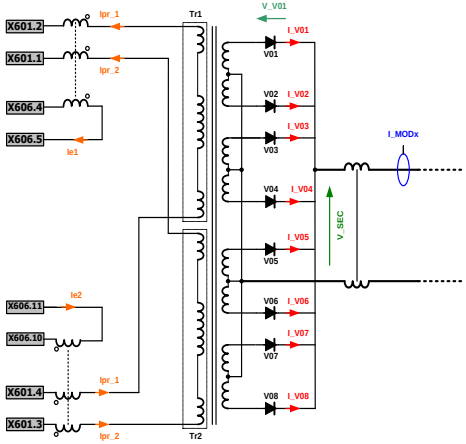
X601.2
X601.1
X606.4
X606.5
X606.11
X606.10
X601.4
X601.3
Ipr_1
Ipr_2
Ie1
Ie2
Tr1
Tr2
V_V01
I_V01
V01
V02
I_V02
V03
I_V03
V04
I_V04
V05
I_V05
V06
I_V06
V07
I_V07
V08
I_V08
I_MODx
V_SEC

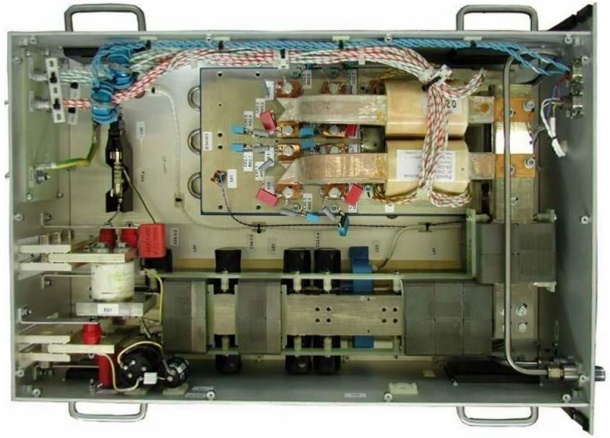

PWC-T

Parallel connection with thyristor rectifier

Example: Alice Dipole, 31kA/150V

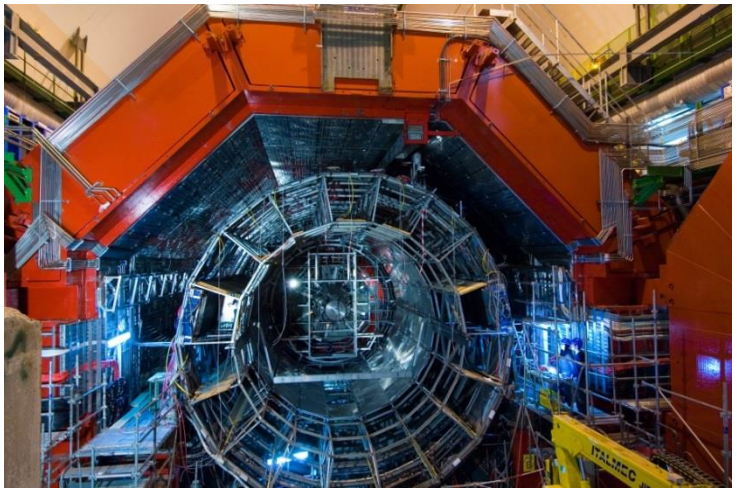

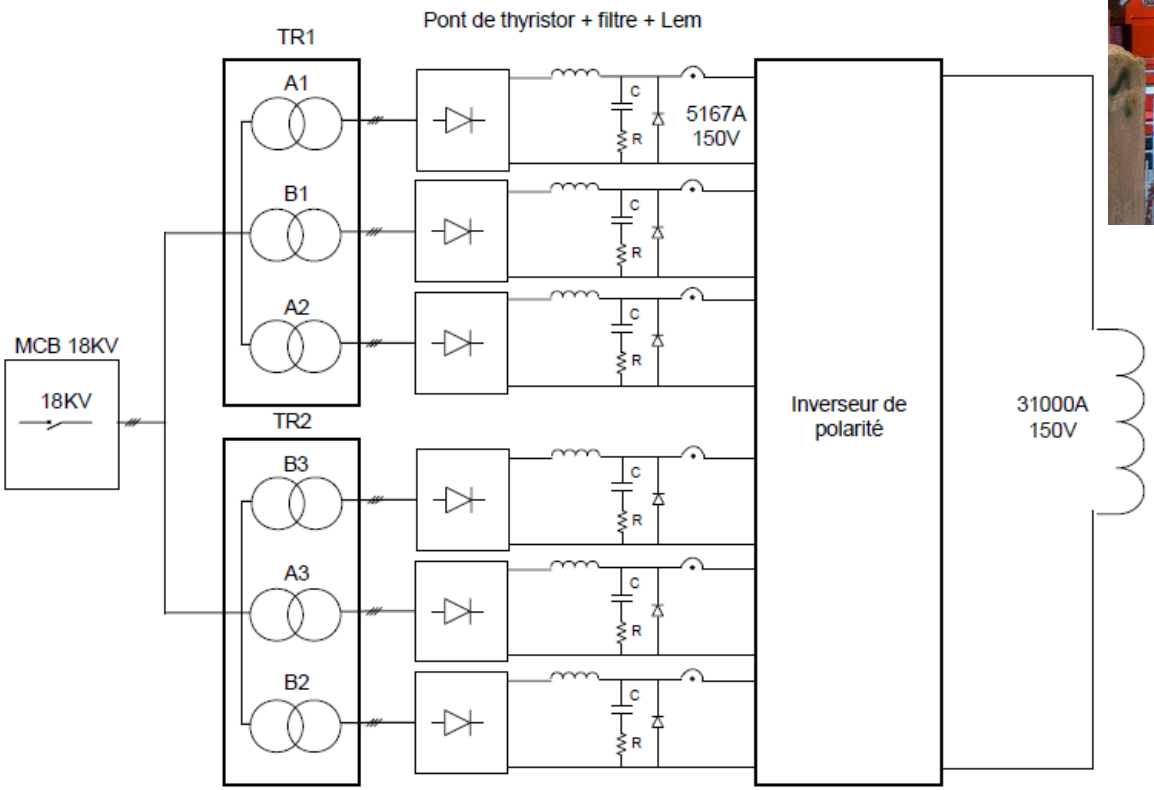

Series connection of sub-converters

Example: SPS dipole converter, 6kA/24kV

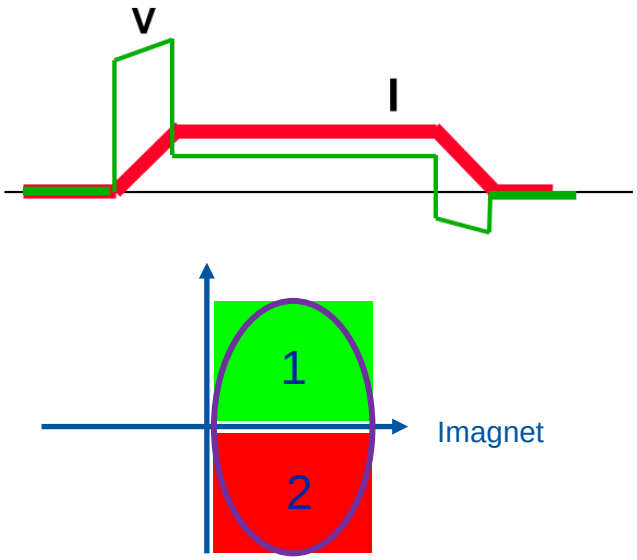

12 converters in series between magnets.
Each converter gives 6kA/2kV.

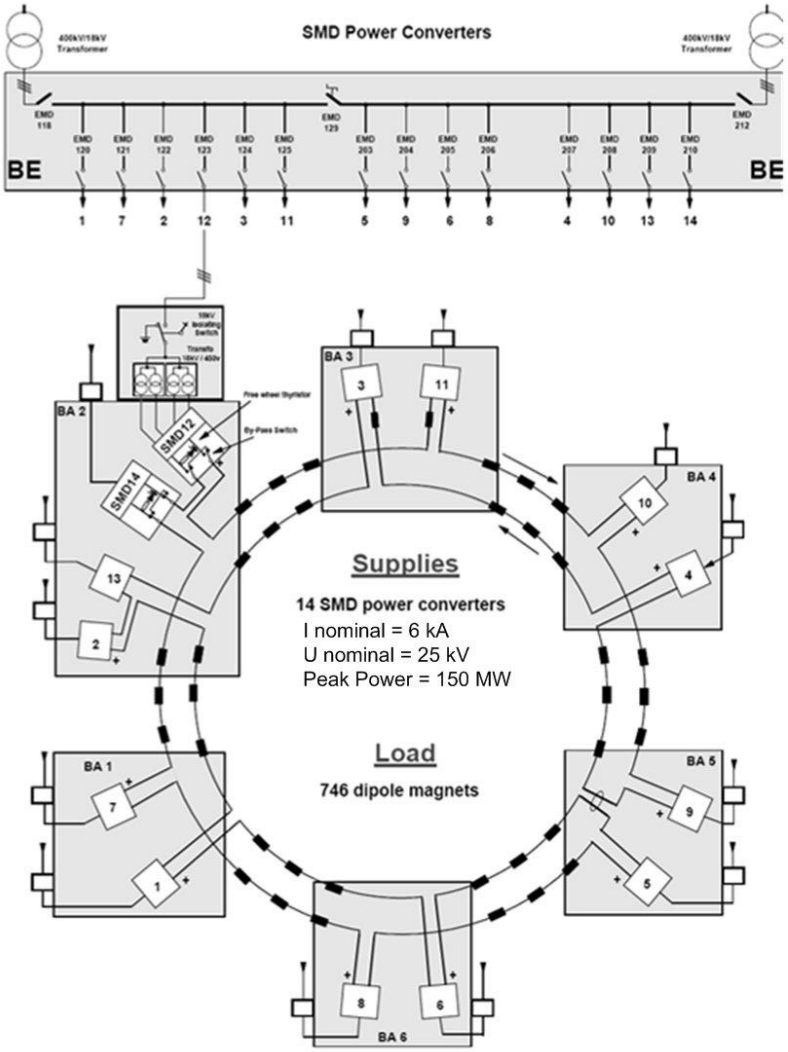

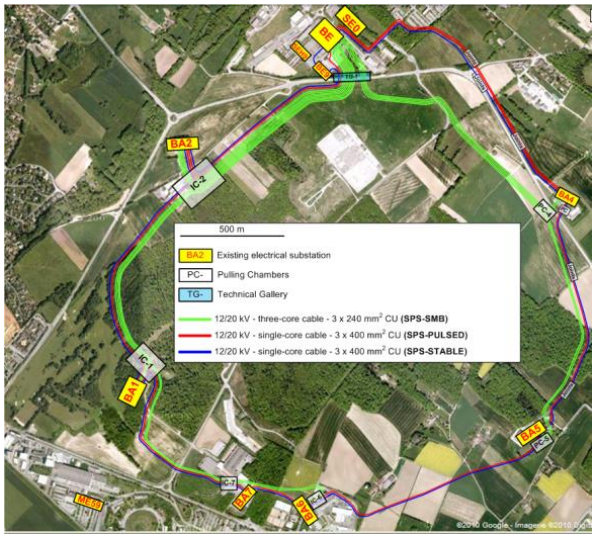
SE0
BE
BA2
IC-2
BA4
PC-4
500 m
BA2 Existing electrical substation
PC- Pulling Chambers
TG- Technical Gallery
12/20 kV - three-core cable - 3 x 240 mm² CU (SPS-SMB)
12/20 kV - single-core cable - 3 x 400 mm² CU (SPS-PULSED)
12/20 kV - single-core cable - 3 x 400 mm² CU (SPS-STABLE)
IC-1
BA1
BA5
PC-5
IC-7
BA7
BA6
ME59

Nested circuits

Nested powering scheme is popular with accelerator physicists and magnet designers.

Allows association of different magnets or to correct local deviation over a long series of magnets.

Main reasons: saving on DC cables, current leads, lower power converter rating,…

Example, LHC inner triplet

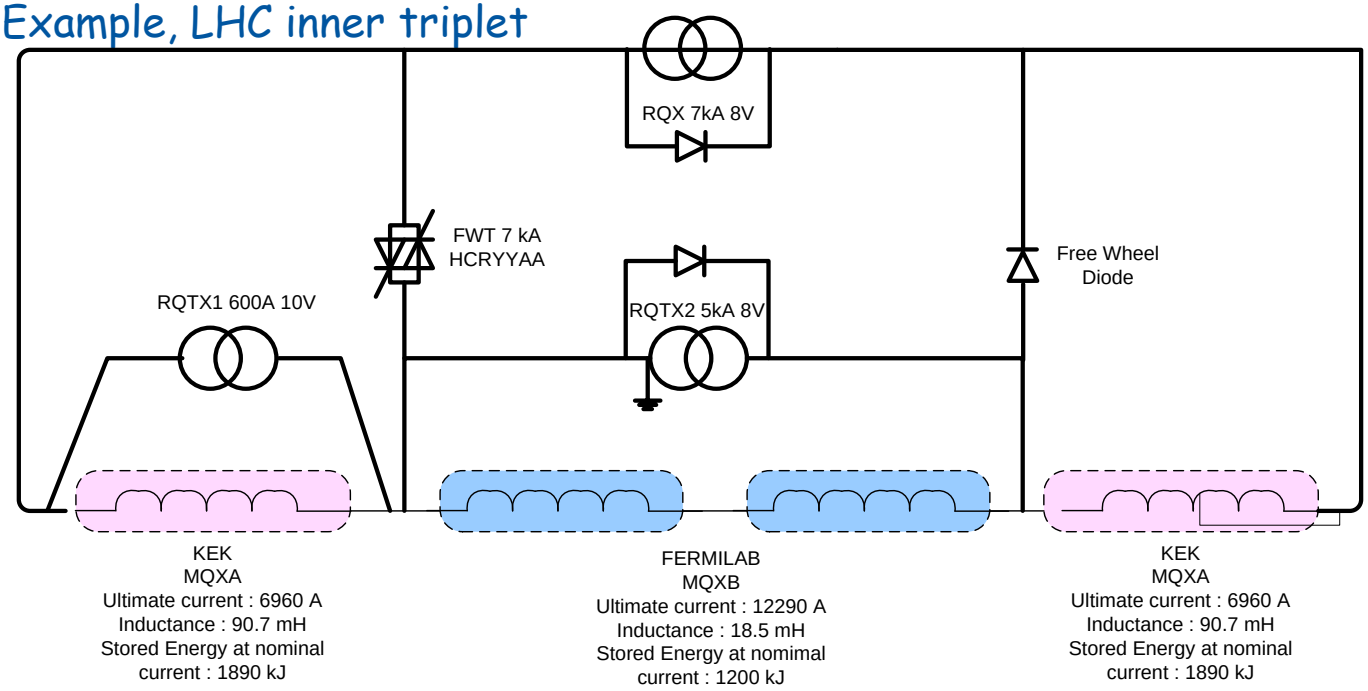

Nested circuits

Nested powering scheme is a nightmare for power engineers !!

Very complex control, it is like a car with many drivers having a steering wheel acting on only one wheel.

Coupled circuits

Nested circuits

Reduce investment but decrease availability!

Very difficult to operate and repair, long MTTR.

All converters have to talk each others.

Need a decoupling control to avoid fight between converters !

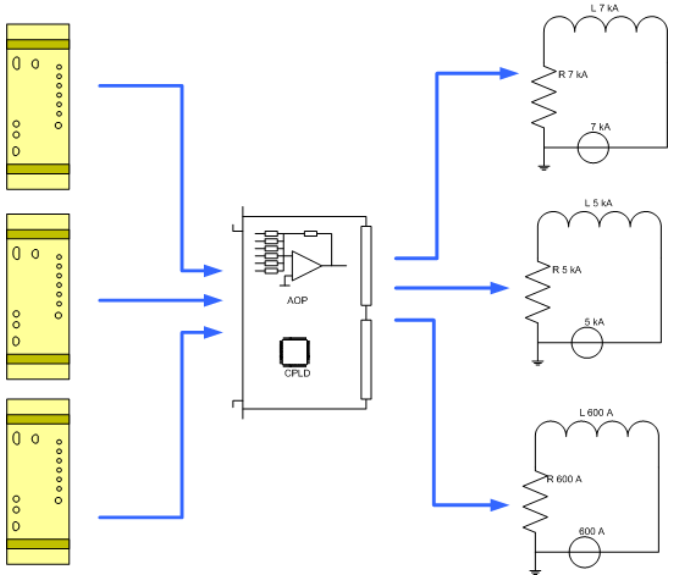

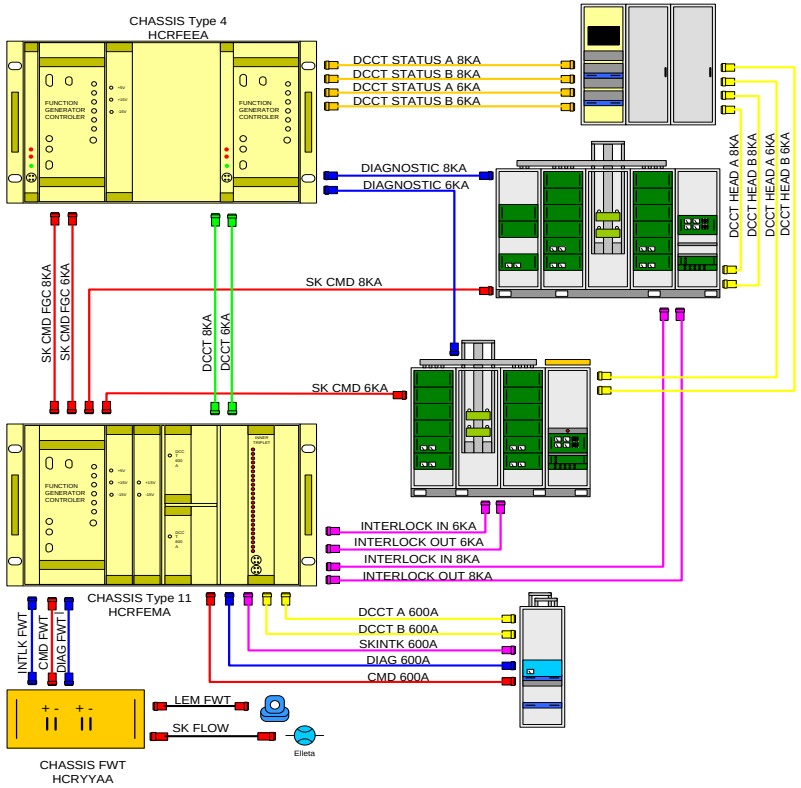

Nested circuits

Look at the current and voltage of RQX while RTQX2 current is changing!

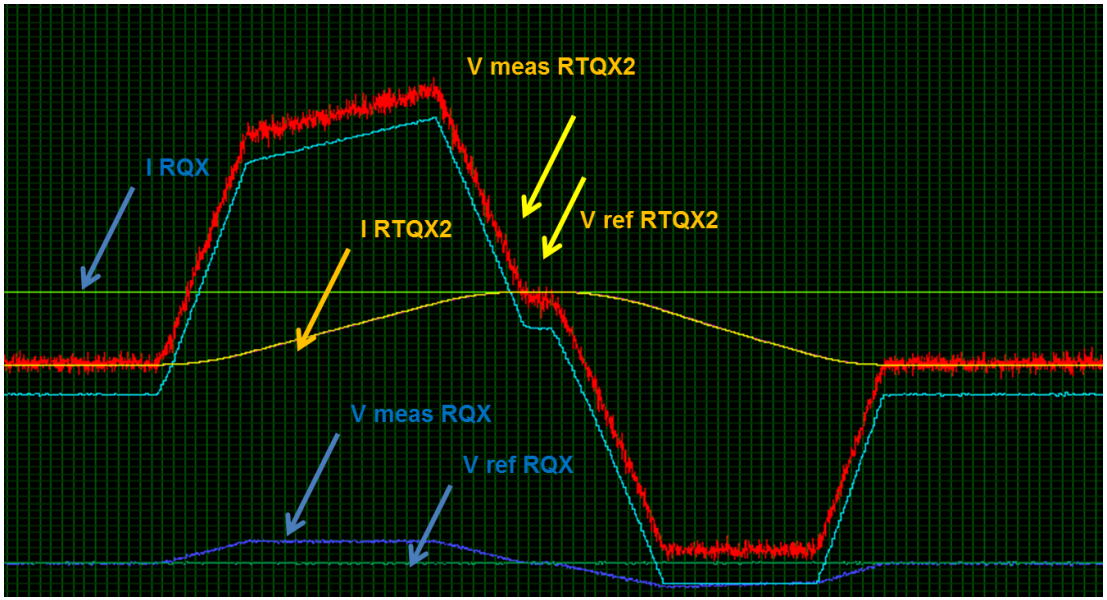

Nested circuits aren't RECOMMANDED !

LHC inner triplet works perfectly well but MTTR is very high.

RHIC had many difficulties with nested circuits.

Energy management

Magnets need voltage to move their current:

$$V_{magnet}(t) = R_{mg} * I_{mg}(t) + L_{mg} * dI_{mg}(t)/dt$$

Example with the PS main magnets

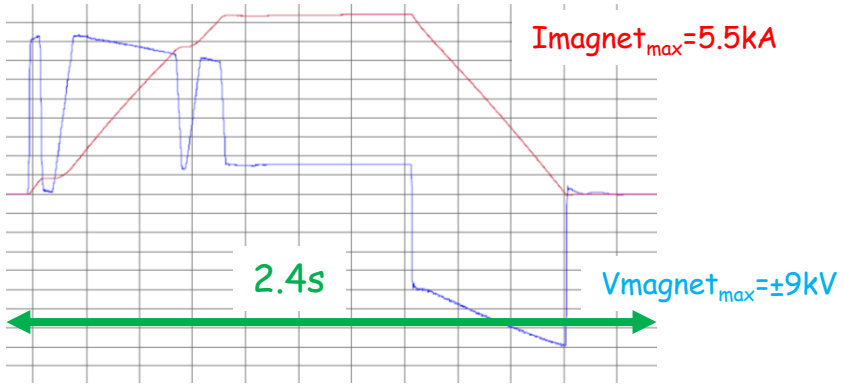

Blue: Umagnet 1 kV / div
Red: Imagnet 500A / div

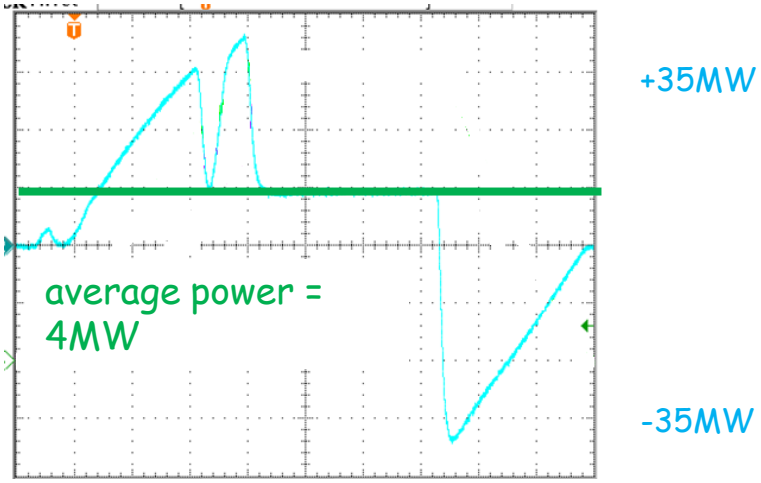

Light blue: Power_to_magnet 10 MW / div

Power(t) = I_magnet(t) x V_magnet(t)

The peak power needed for the main magnets is ±40MW with a dynamic of 1MW/ms

The average power is only 4MW !!!

The challenge: Power a machine which needs a peak power 10 times the average power with a very high dynamic !!!

New concept for energy management

The energy to be transferred to the magnets is stored in capacitors
The capacitor banks are integrated in the power converter

- DC/DC converters transfer the power from the storage capacitors to the magnets.
- Four flying capacitors banks are not connected directly to the mains. They are charged via the magnets
- Only two AC/DC converters (called chargers) are connected to the mains and supply the losses of the system and of the magnets.

Patent
The global system with dedicated control has been filed as a patent application. European Patent Office, Appl. Nr: 06012385.8 (CERN & EPFL)

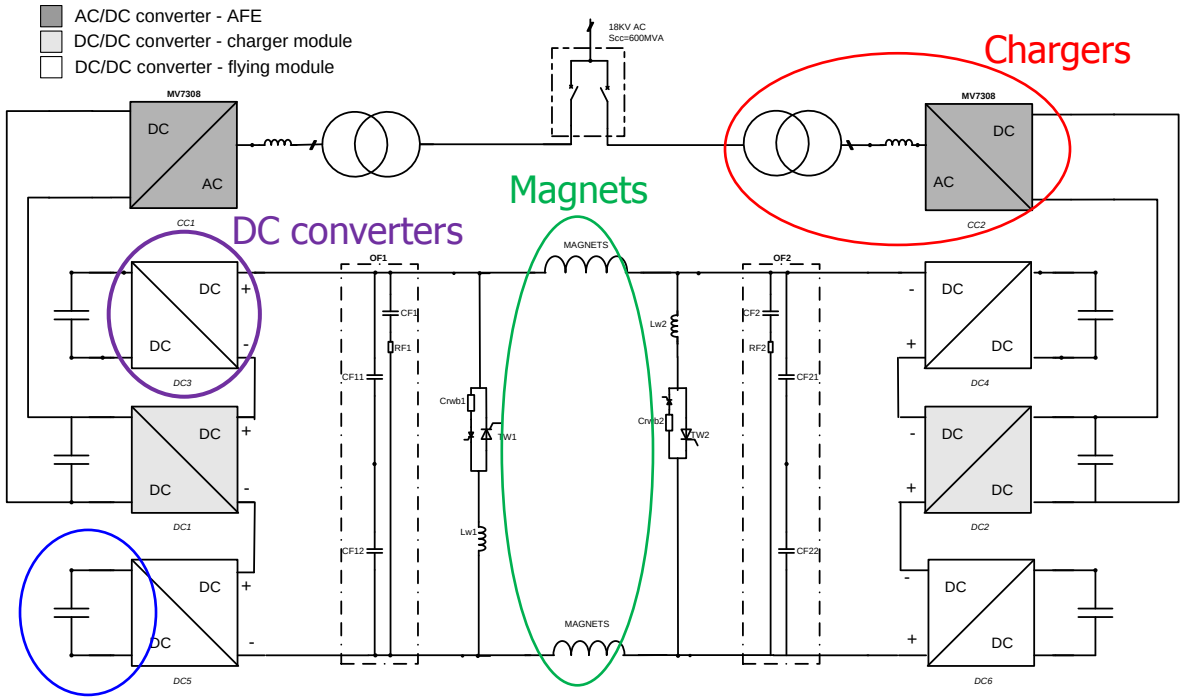

Energy management

Magnets current and voltage

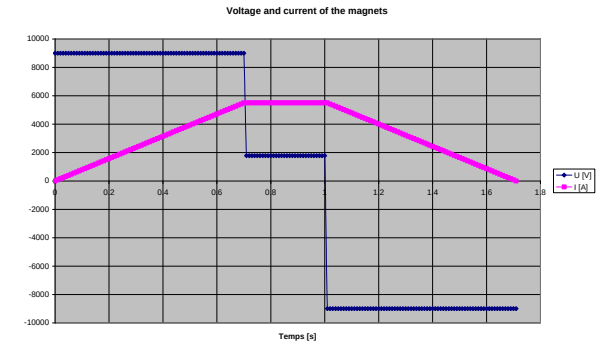

Stored magnetic energy

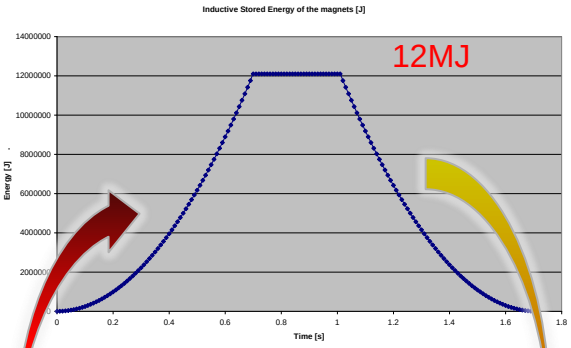

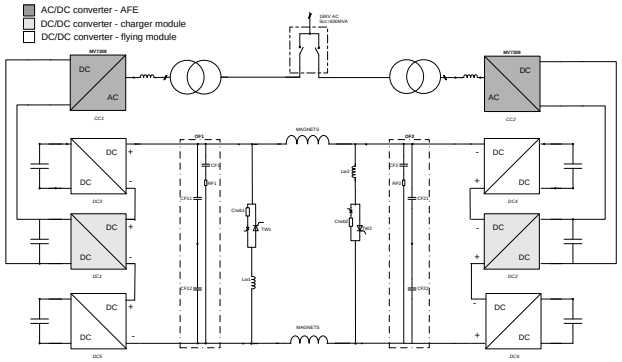

Power to the magnets

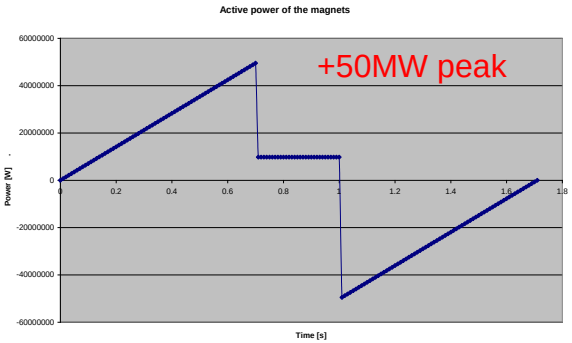

Capacitor banks voltage

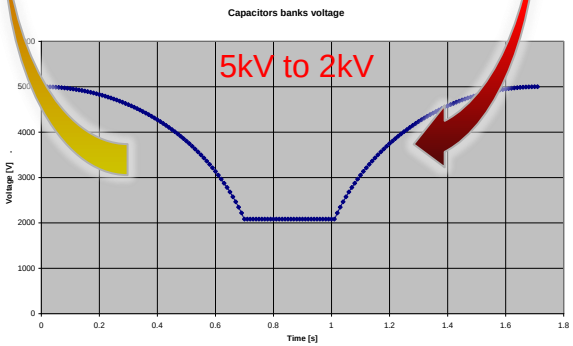

Power from the mains = Magnet resistive losses

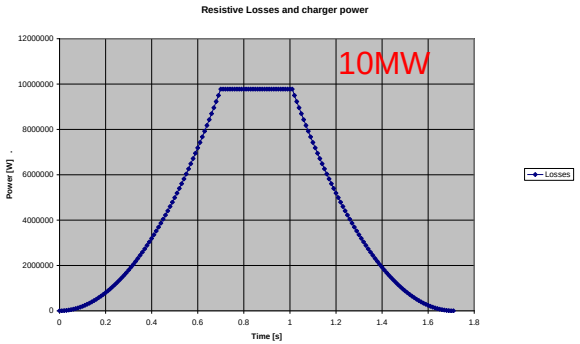

POPS: POwer converter for the PS main magnets.

Energy management

Example: POPS 6kA/±10kV

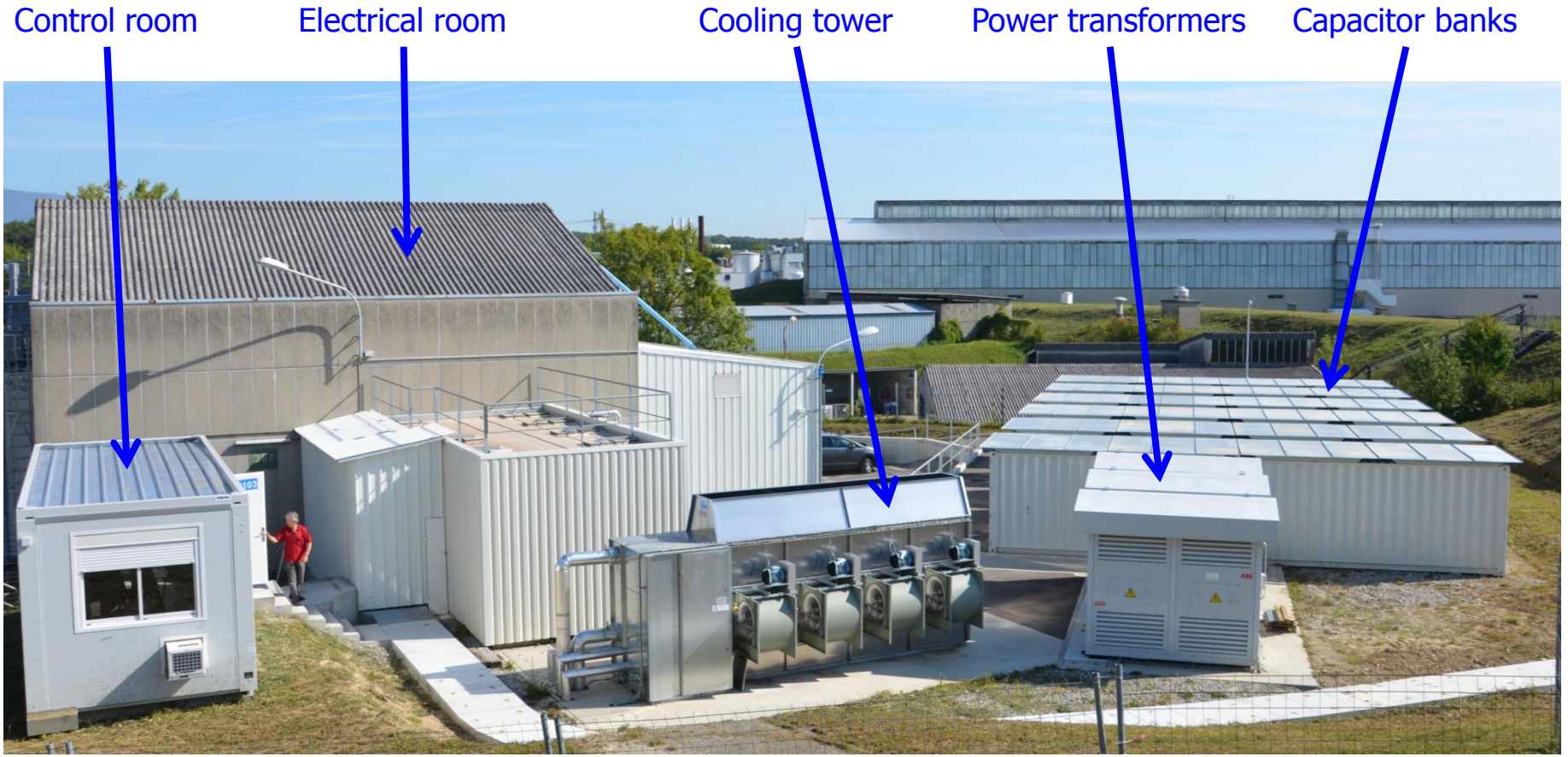

Energy management

- Capacitor banks
  - 5kV Dry capacitors
  - Polypropylene metalized self healing
  - Outdoor containers: 2.5m x 12m, 18 tons
  - 0.247F per bank, 126 cans
  - 1 DC fuse
  - 1 earthing switch
  - 3 MJ stored per bank

- 60 tons of capacitors divided in
- 6 capacitor banks making in total 18.5MJ

- Up to 14MJ can be extracted during a cycle!

- The capacitors represent 20% of the total system cost.

Energy management

Best optimization : Max power taken on the mains # magnet average power

Resistive losses of the magnets

Power demand on the mains

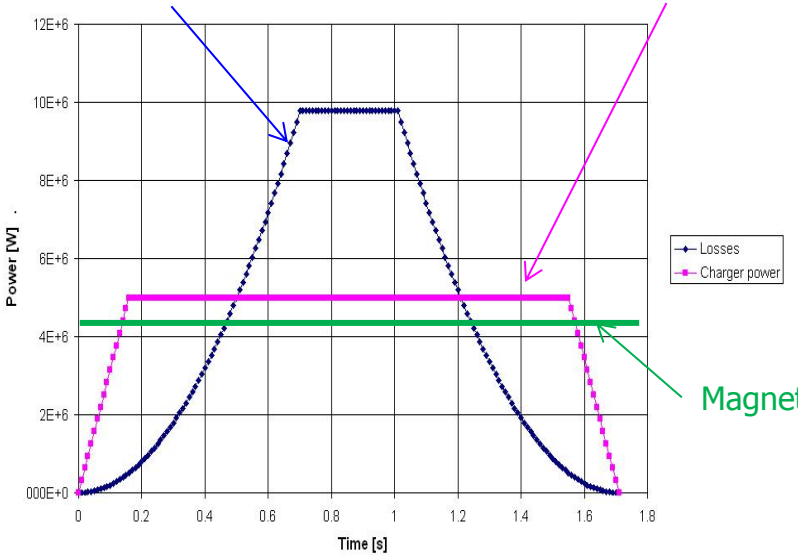

Magnet average power

POPS energy management

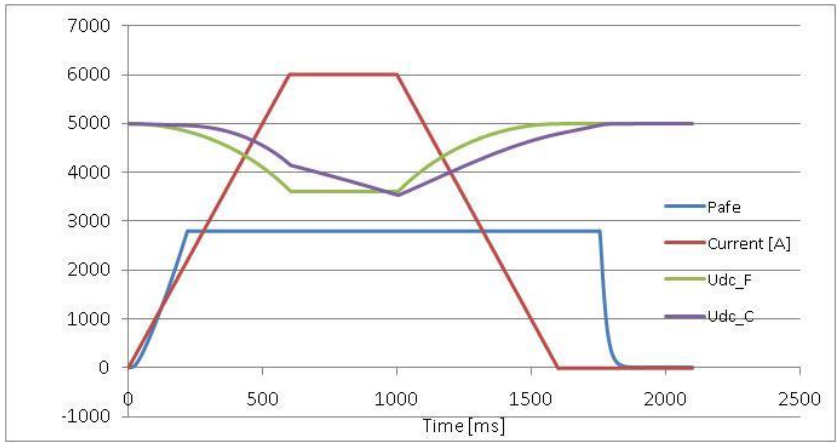

Discharged converter

Synchrotrons

Beam is injected, accelerated and extracted in several turns

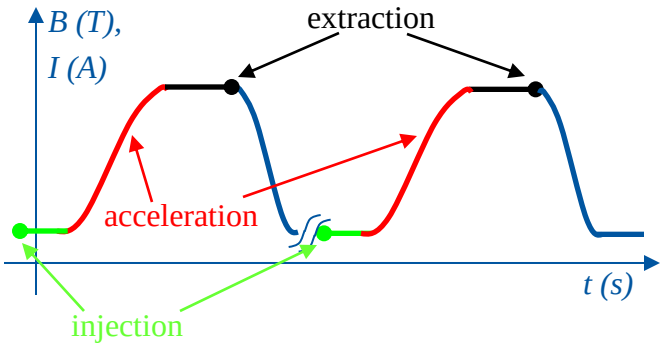

Rise and fall time < few ms

Linac's and transfer lines

Beam is passing through in one shot, with a given time period;

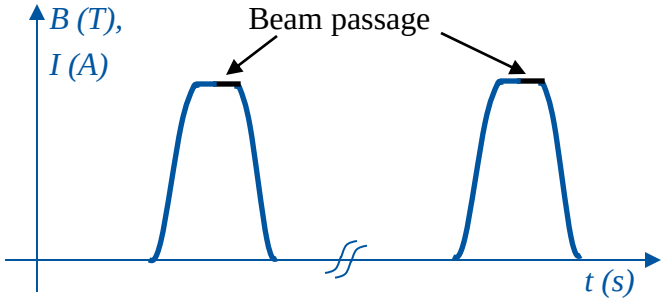

Direct Energy transfer from mains is not possible:
Intermediate storage of energy
Peak power : could be > MW
Average power kW

Discharged converter

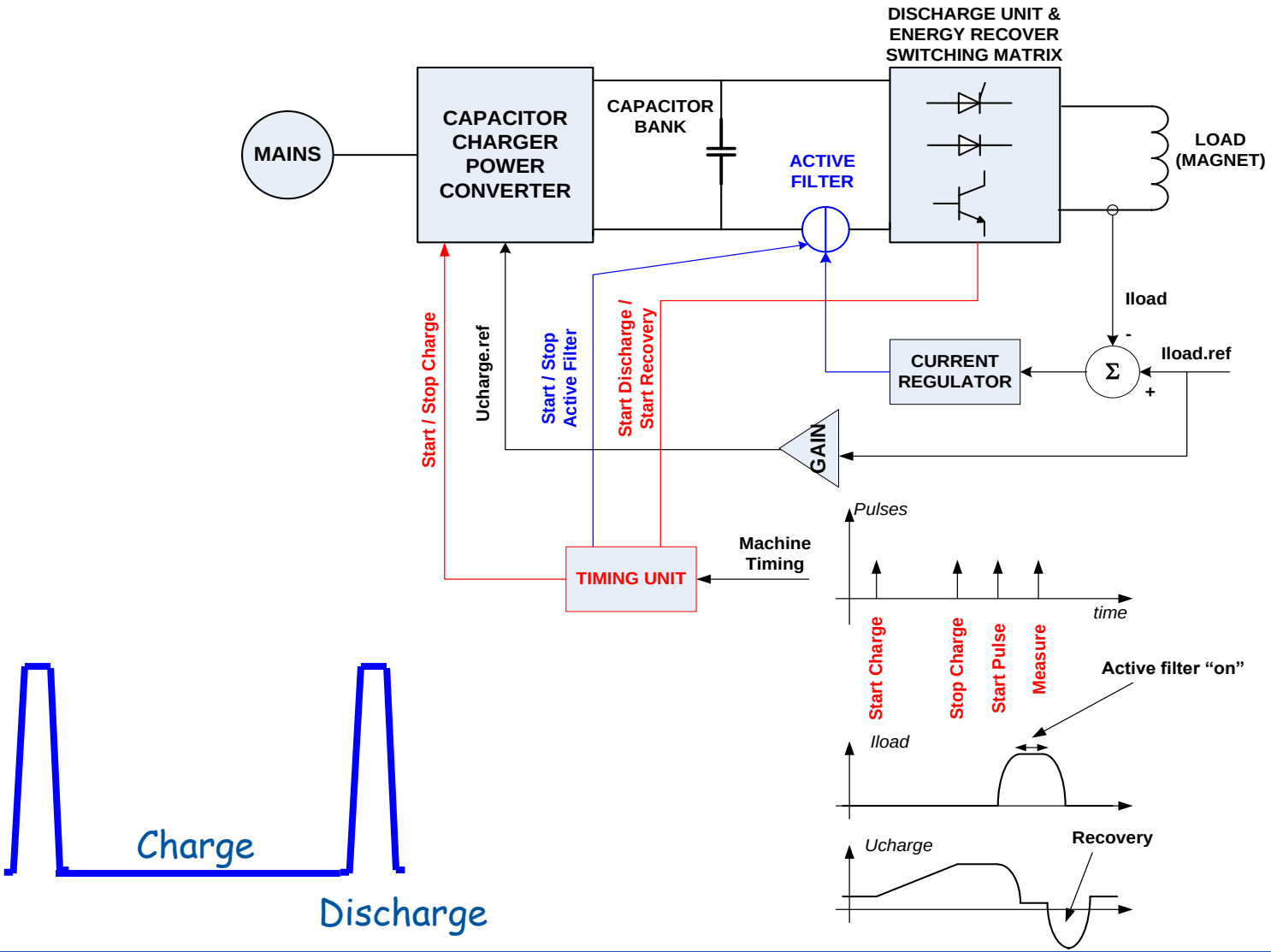

Example of LINAC4 Klystron modulator

Specification	symbol	Value	unit
Output voltage	V_{kn}	110	*kV*
Output current	I_{out}	50	*A*
Pulse length	$t_{rise}+t_{set}+t_{flat}+t_{fall}$	1.8	*ms*
Flat-Top stability	*FTS*	<1	*5*
Repetition rate	$1/T_{rep}$	2	*Hz*

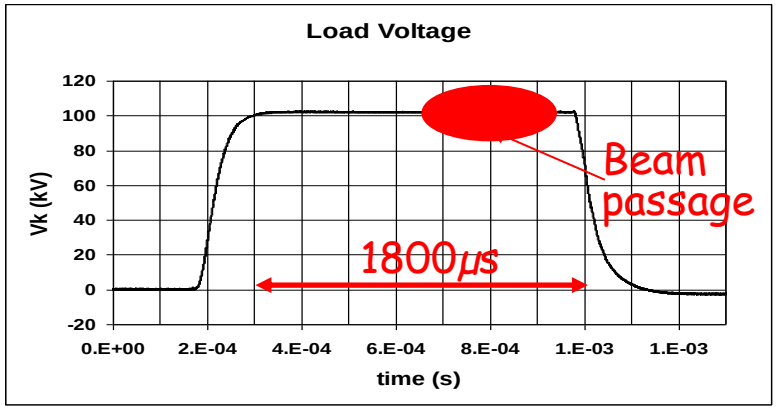

Peak power : 5.5MW
Average power: 20kW

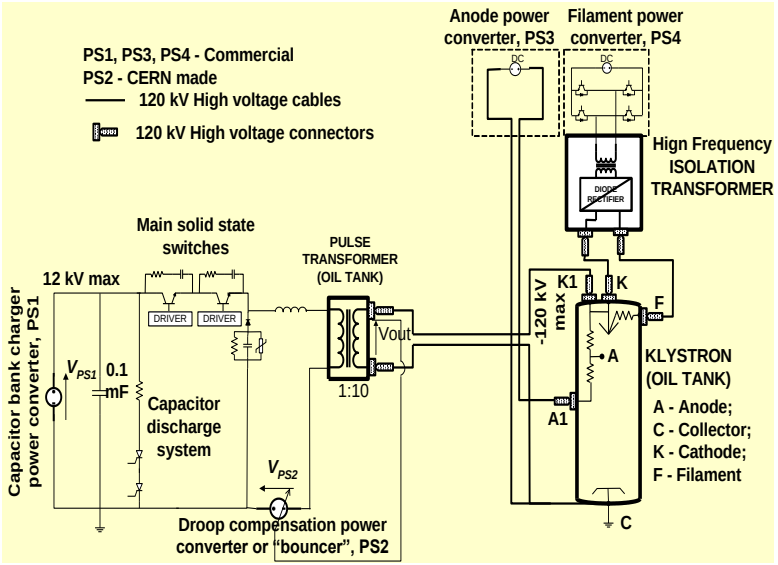

Power supply control

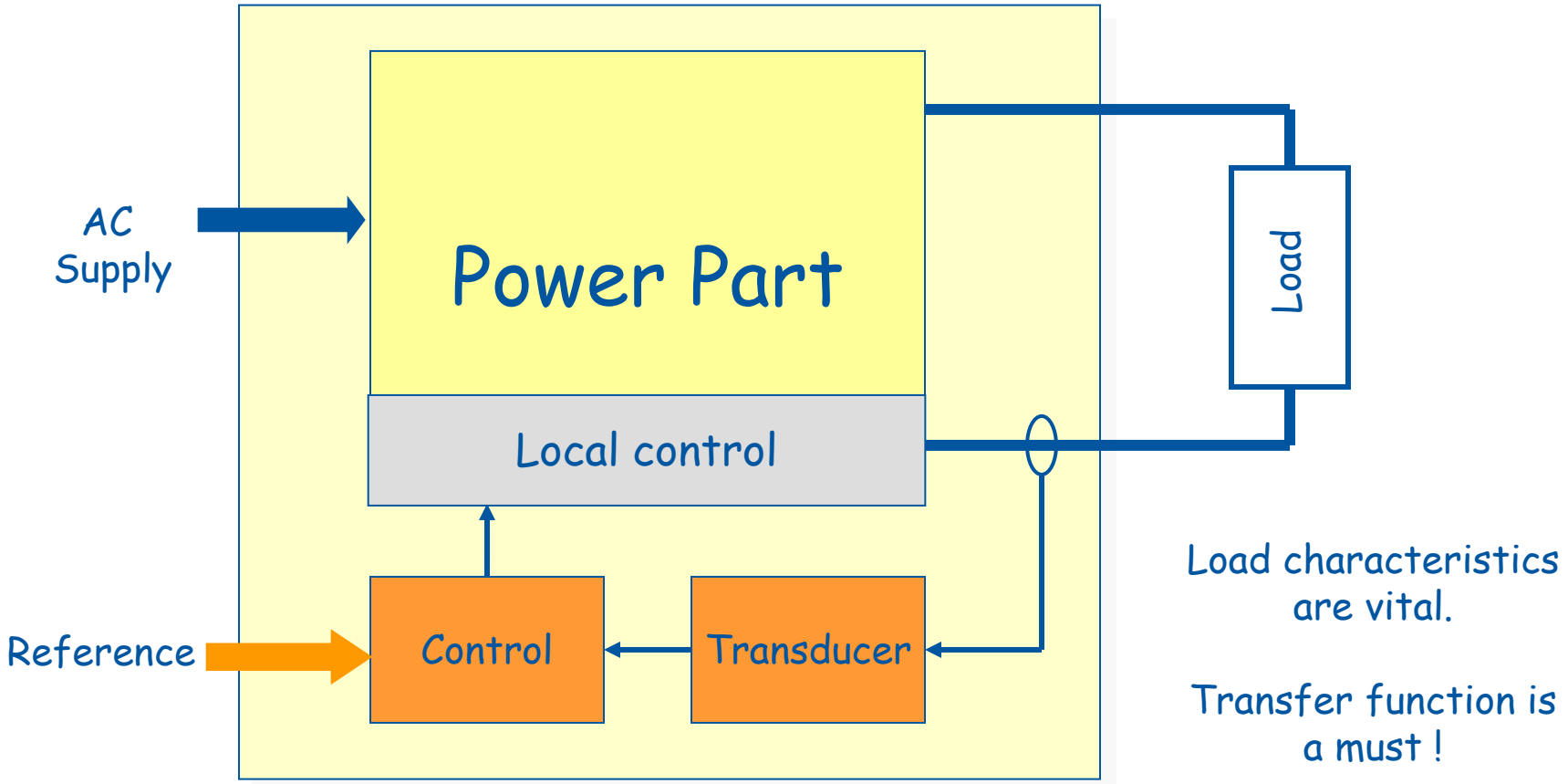

Power supply control

The power supply are controlled by the global control system.

They need to be synchronized => Timing

Locally, a fieldbus (must be deterministic) is used to communicate with a gateway,

WORLDFIP in the LHC

ETHERNET for LINAC4

In each power supply, an electronic box (FGC) manages the communication, the state machine and do the current control.

Real time software is implemented.

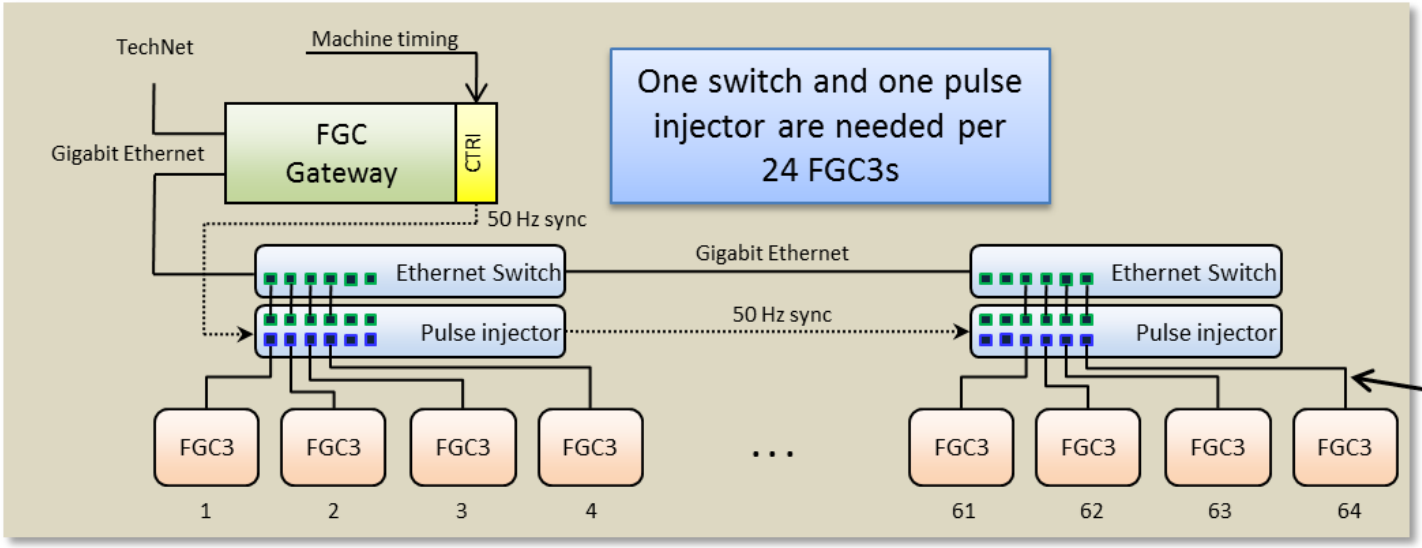

Power supply control

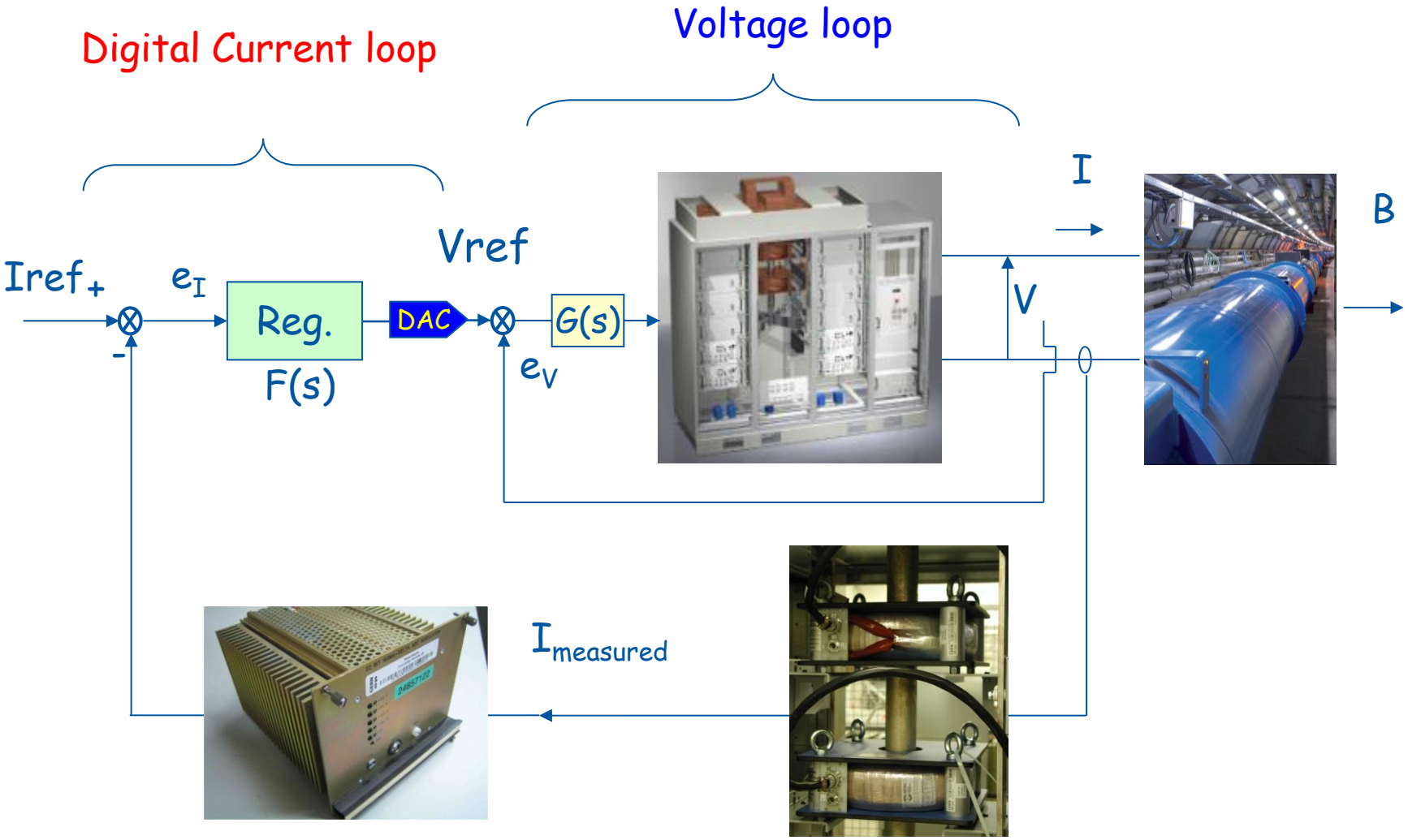

High-precision definition

Accuracy

The closeness of agreement between a test result and the accepted reference value. (ISO)

Reproducibility

Uncertainty when returning to a set of previous working values from cycle to cycle of the machine.

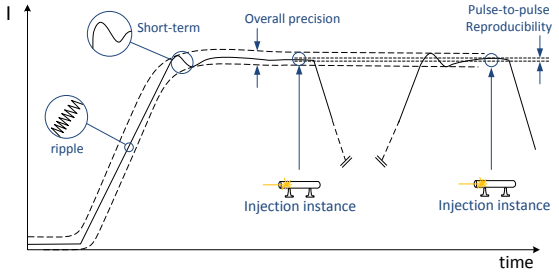

Stability

Maximum deviation over a period with no changes in operating conditions.

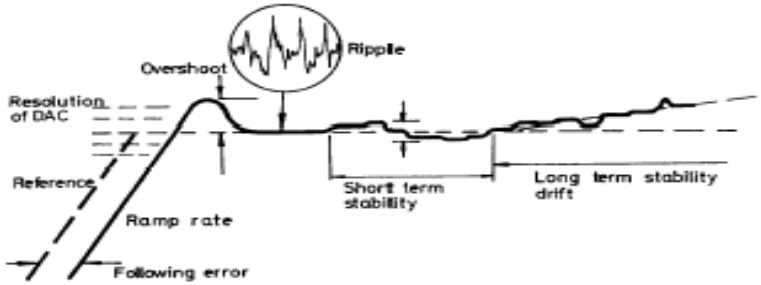

Nee calibration to reference

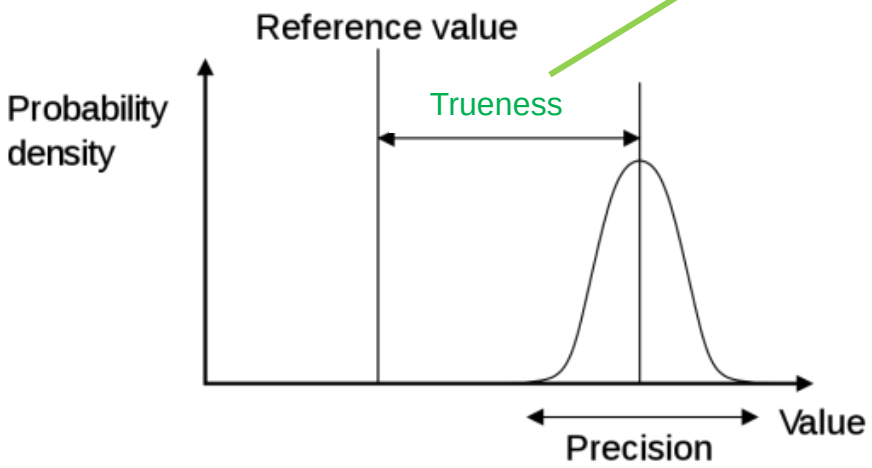

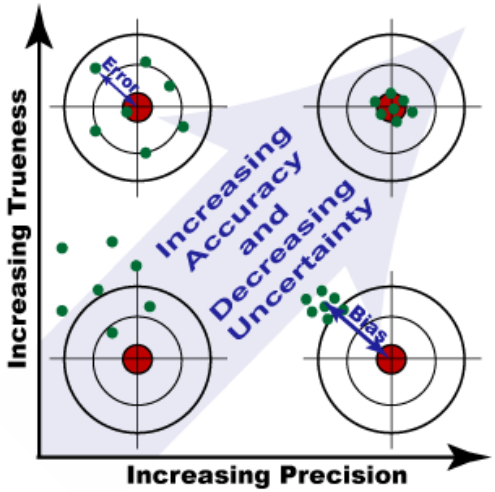

Accuracy characterisation

The term Accuracy is a qualitative concept, used to describe the quality of a measurement. At CERN (and elsewhere) a measurement's systems capability is often characterized in terms of Gain and Offset errors, Linearity, Repeatability, Reproducibility and Stability.

Linearity:

Difference in the systematic error of a measuring device, throughout its range.

Gain and Offset errors:

They are systematic errors that relate to the trueness of a measurement.

The offset error refers to the systematic error at zero and the gain error to the systematic error at full scale.

Stability:

Measurement of the change in a measurement system's Systematic errors with time. We can more specifically refer to Gain Stability or Offset Stability.

Noise can also be seen as a measurement of a device's stability, although normally the term stability is used only for the low frequency range (≤Hz).

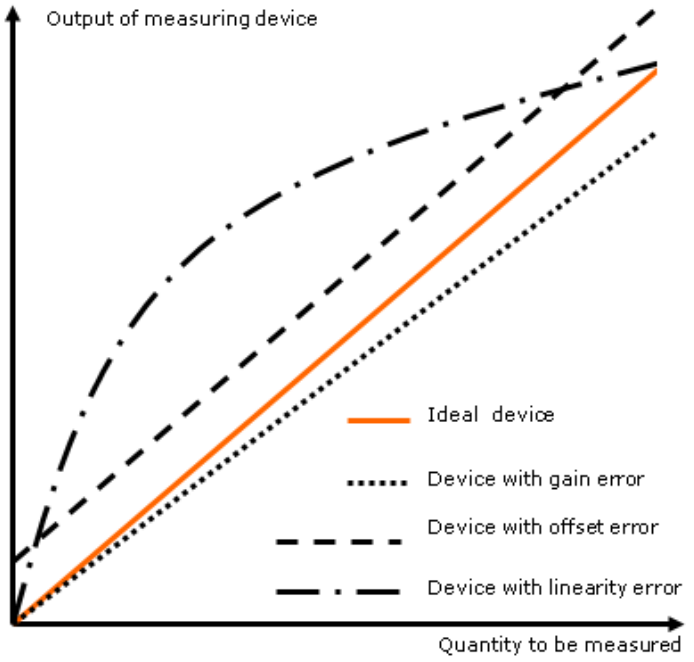

http://te-epc-lpc.web.cern.ch/te-epc-lpc/sensors/definitions.stm

Current measurement technologies

	DCCTs	Hall effect	CTs	Rogowsky	Shunts
		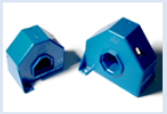		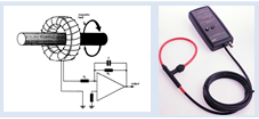	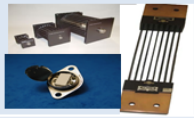
Principle	Zero flux detection	Hall effect	Faraday's law	Faraday's law	Ohm's law
Output	Voltage or current	Voltage or current	Voltage	Voltage	Voltage
Accuracy	Best devices can reach a few ppm stability and repeatability	Best devices can reach 0.1%	Typically not better than 1%	Typically %, better possible with digital integrators	Can reach a few ppm for low currents, <% for high currents
Ranges	50A to 20kA	hundreds mA to tens of kA	50A to 20kA	high currents possible, up to 100kA	From <mA up to to several kA
Bandwidth	DC ..kHz for the higher currents, DC..100kHz for lower currents	DC up to couple hundred kHz	Typically 50Hz up to a few hudreds of kHz	Few Hz possible, up to the MHz	Up to some hundreds of kHz with coaxial assemblies
Isolation	Yes	Yes	Yes	Yes	No
Error sources	**Magnetic** (remanence, external fields, centering) **Burden resistor** (thermal settling, stability, linearity, tempco) **Output amplifier** (stability, noise, CMR, tempco)	**Magnetic** **Burden resistor** **Output amplifier** **Hall sensor stability** (tempco, piezoelectric effect)	**Magnetic** (remanence, external fields, centering, magnetizing current) **Burden resistor**	**Magnetic** **Integrator** (offset stability, linearity, tempco)	Power coefficient, tempco, ageing, thermal voltages

High-precision Current measurement chain

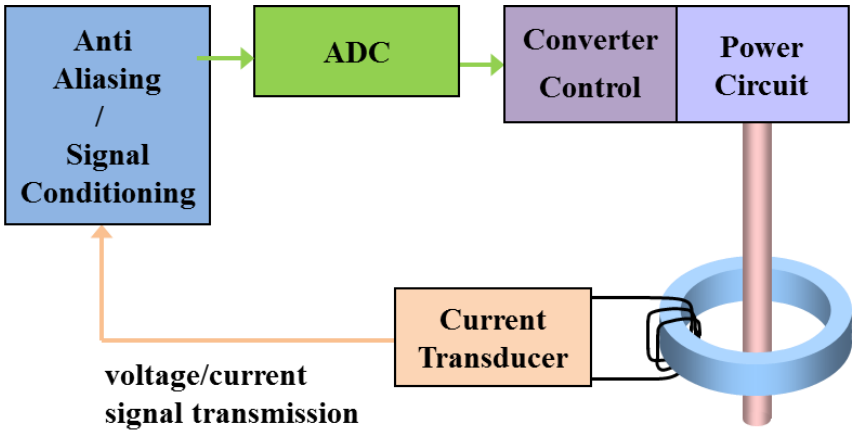

Precision amplifier and burden

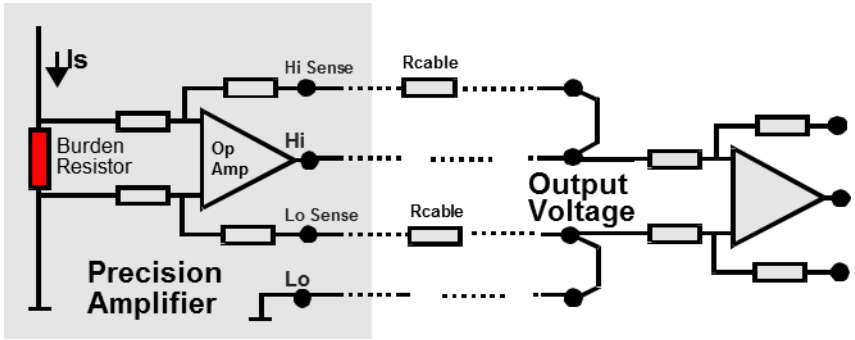

Signal conditioning and filtering

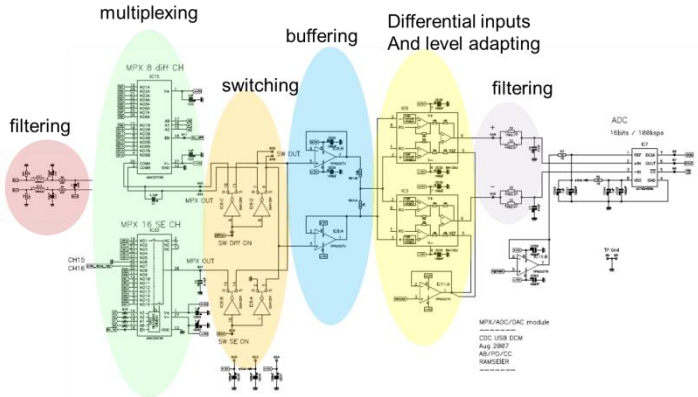

High-resolution ADC

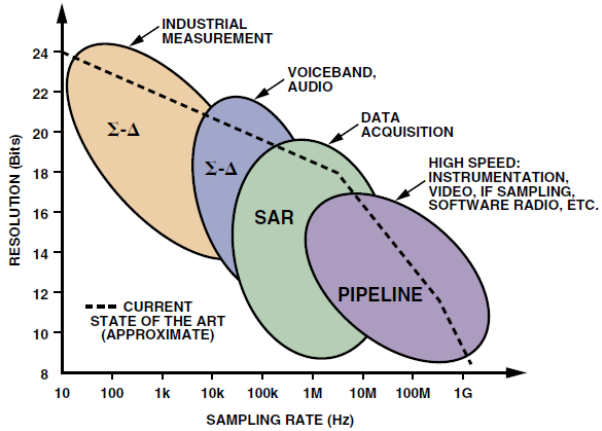

LHC class specification

Converter category	Accuracy Class	½ hour stability	24h stability	1 year stability
Main Dipoles	Class 1	3	5	50
Main quadrupoles	Class 1	3	5	50
Inner Triplets	Class 1	3	5	50
Separation dipoles, Insertion quadrupoles	Class 2	5	10	70
600A multipole correctors	Class 3	10	50	200
120A orbit correctors	Class 4	50	100	1000
60A orbit correctors	Class 4	50	100	1000

LHC class 1 DCCT

13kA DCCT
Magnetic Head

13kA DCCT
Electronics

DCCT specification	
Gain drift 1 year	5 ppm
Offset drift 1 year	5 ppm

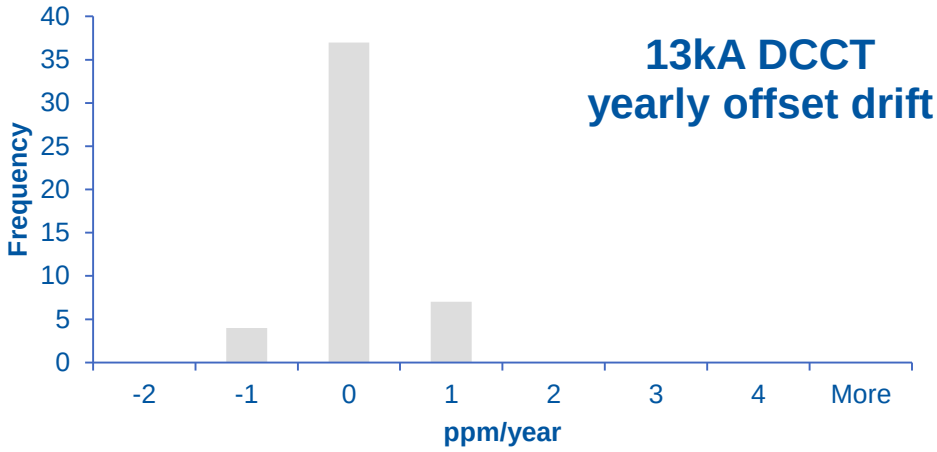

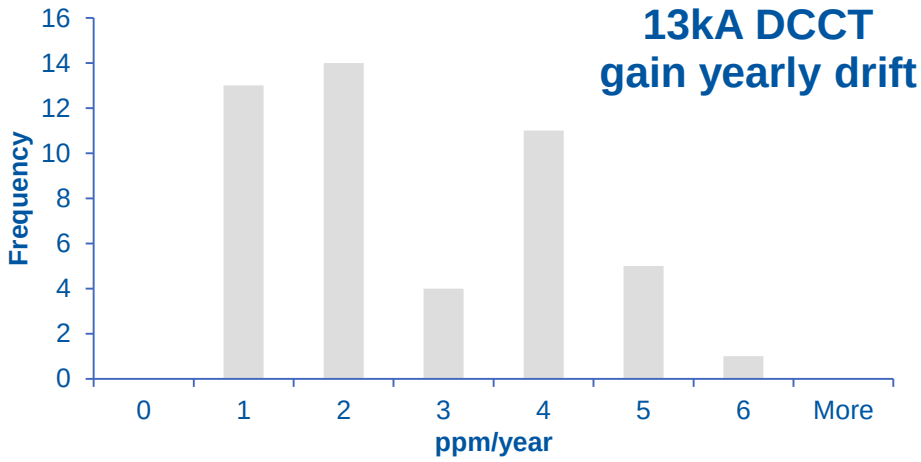

LHC class 1 ADC

The CERN 22 bit Delta Sigma ADC

DS22 specification	
Gain drift 1 year	20 ppm
Offset drift 1 year	10 ppm

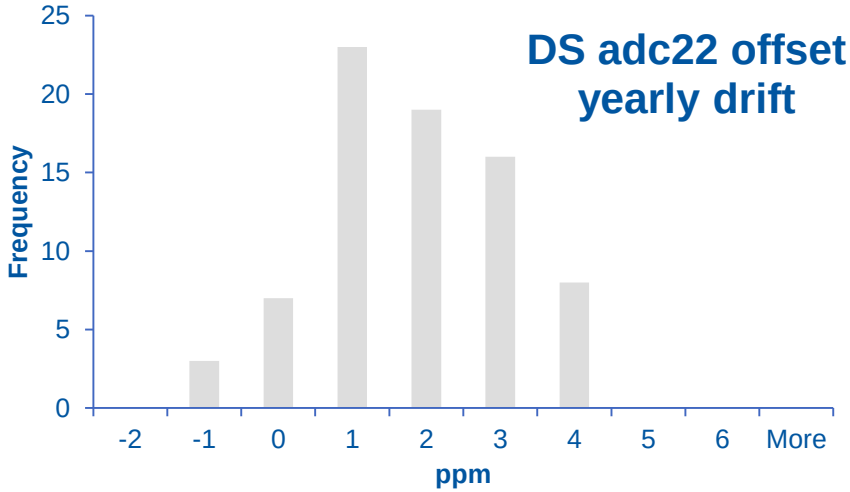

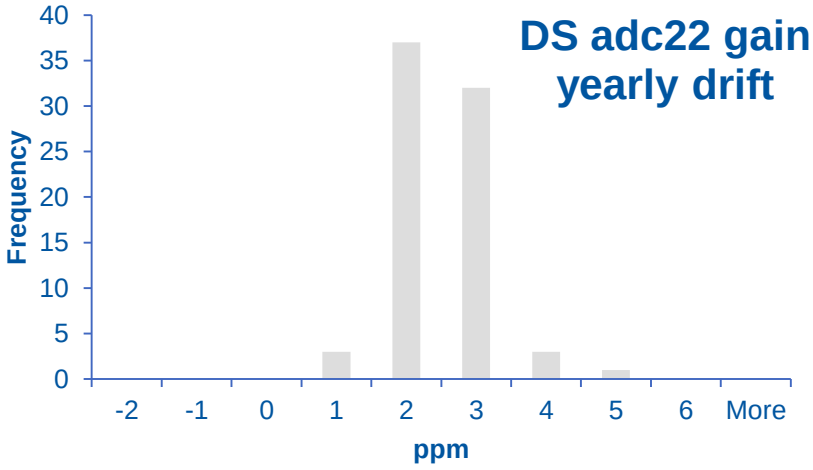

LHC class 1 global accuracy

Converter category	Accuracy Class	1 year stability
Main Dipoles	Class 1	50

LHC specification

50ppm/year

LHC result

< 10ppm/year with annual calibration

Possible improvement

< 2ppm/year with monthly calibration

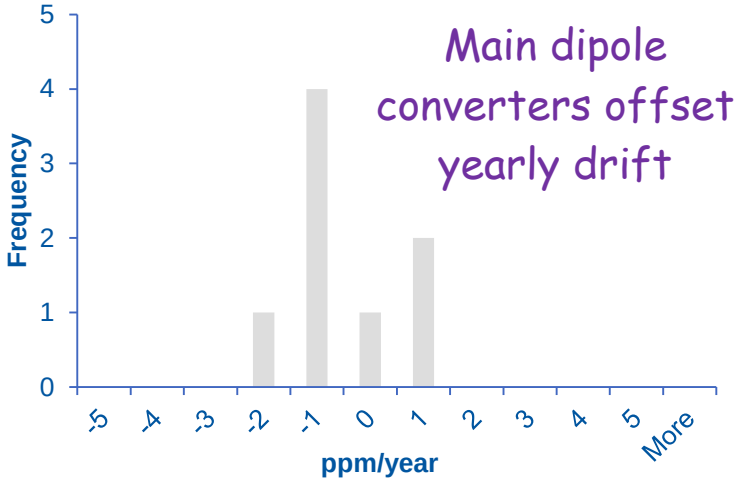

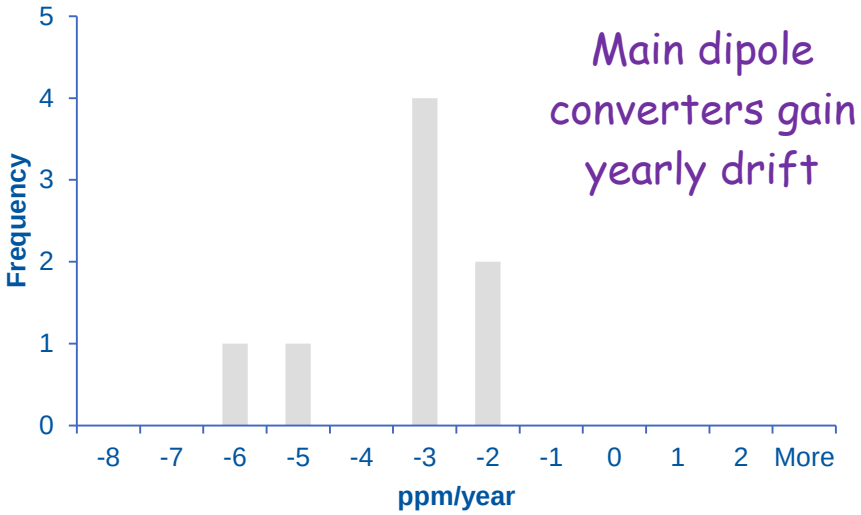

LHC resolution

Smallest increment that can be induced or discerned.

The resolution is expressed in ppm of maximum DCCT current.
Resolution is directly linked to A/D system.

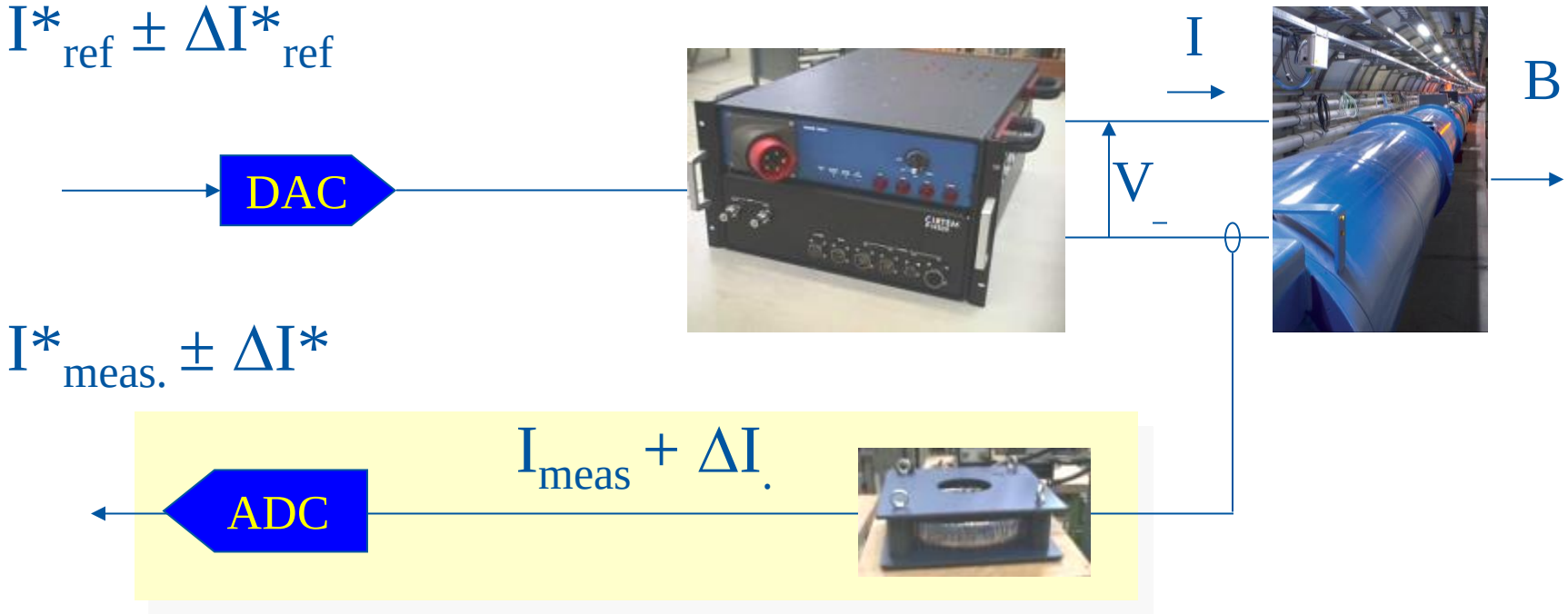

LHC resolution

Best resolution achieved = 1ppm

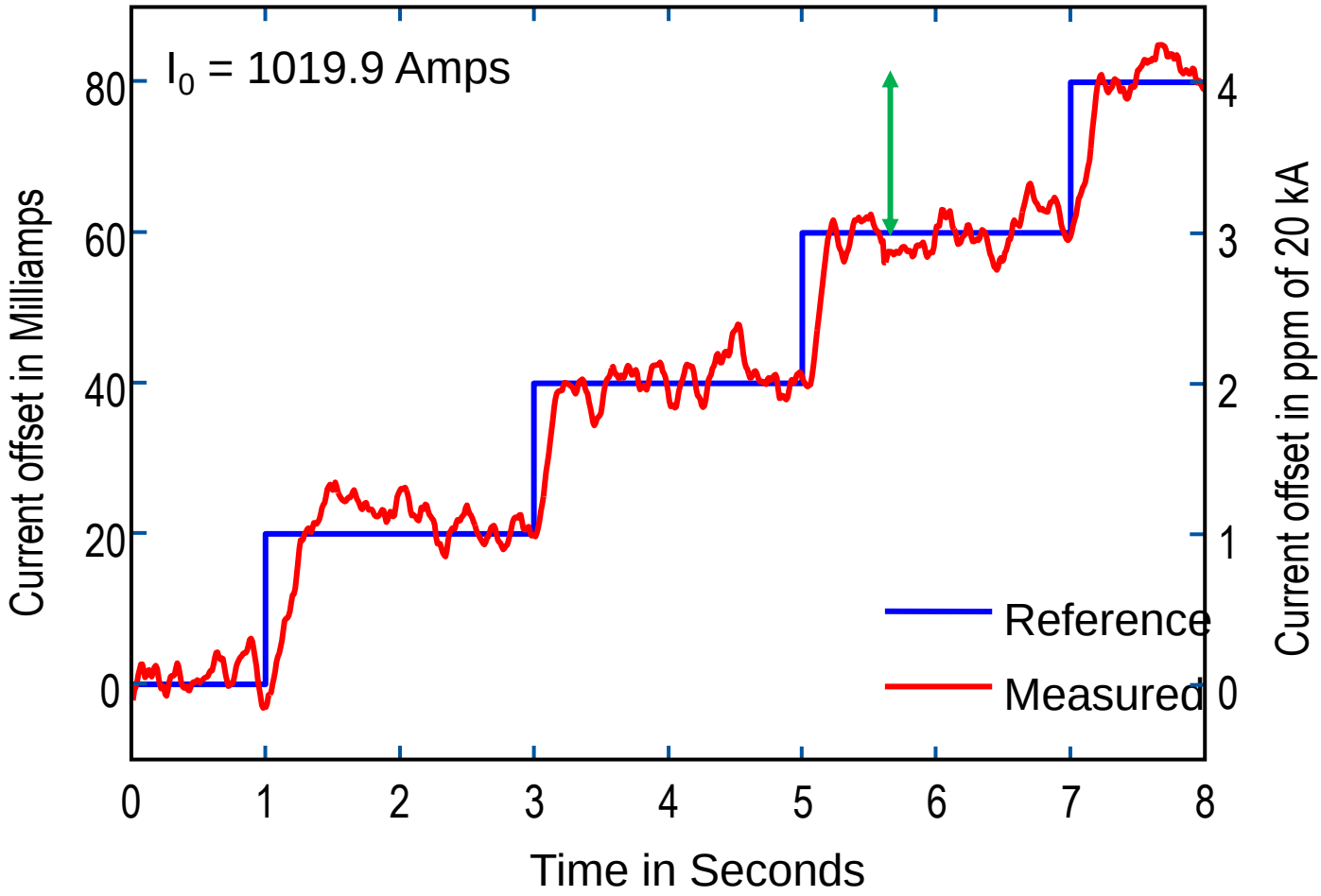

Current regulation

The performance of the current regulation is critical for a machine. Can be a nightmare for operators!

RST controller provides very powerful features:
Manage the tracking error as well as the regulation.

Iref
Current reference

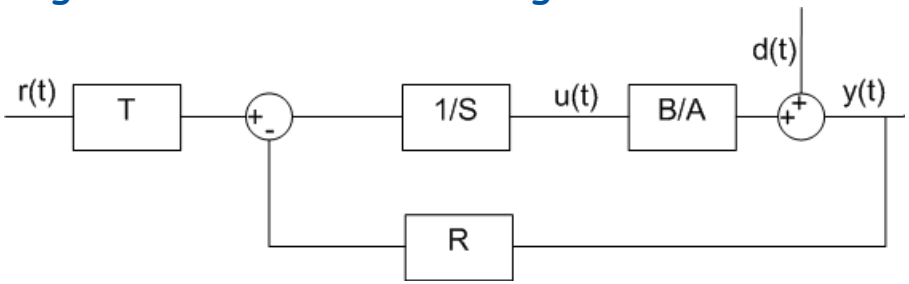

Imeas
Current measurement

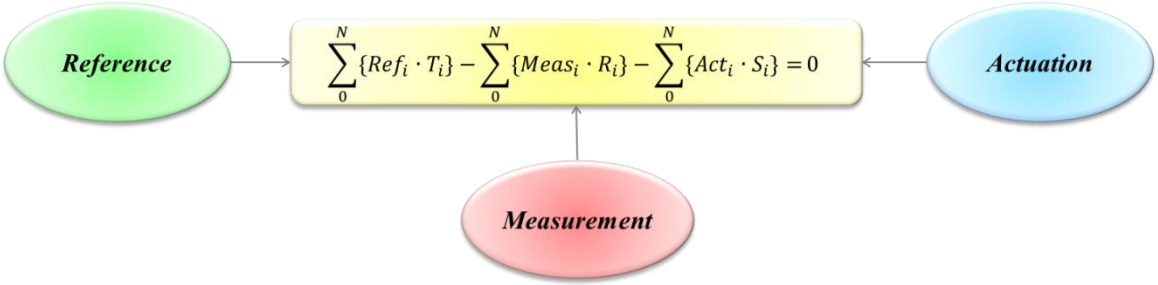

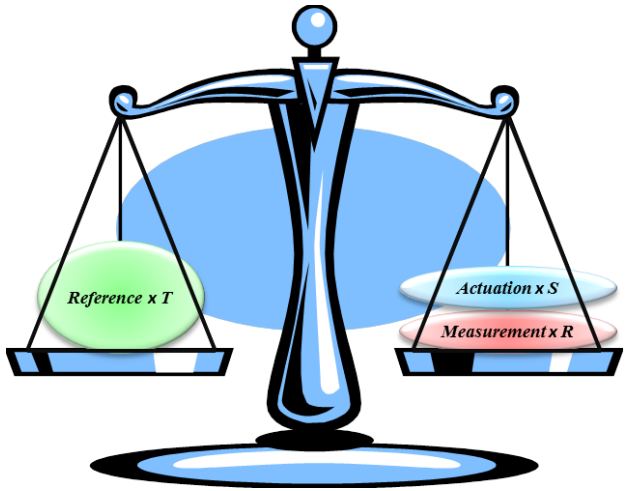

Current regulation

Anti-windup is needed to control the saturation of the loop.

complex control loop

The real controller is shown below:

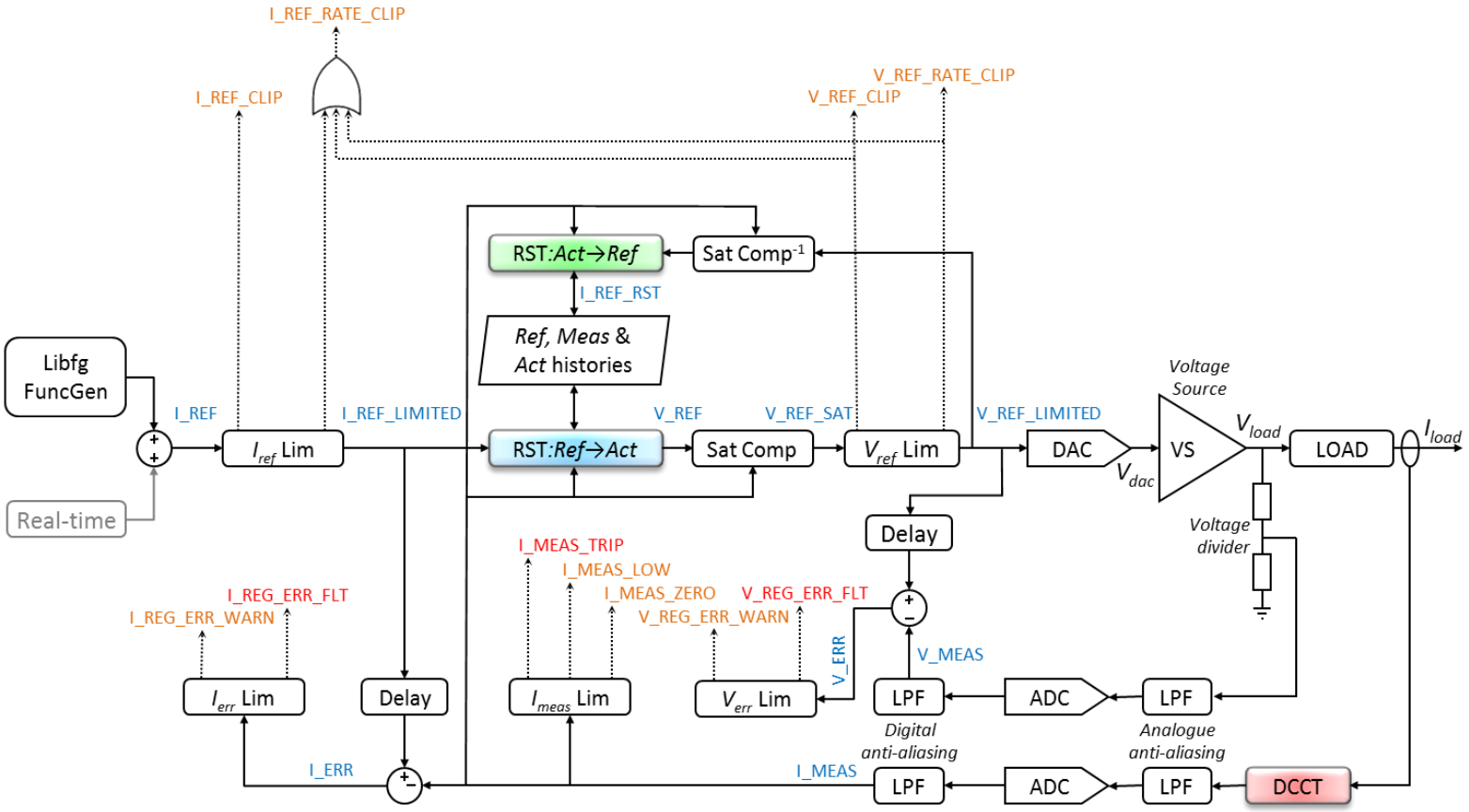

Current regulation

Tutorial is proposed here on the FGC currant regulation

https://project-cclibs.web.cern.ch/project-cclibs/download_tutorial.htm

Here you can find some examples

https://project-cclibs.web.cern.ch/project-cclibs/plots/tests/

ripples

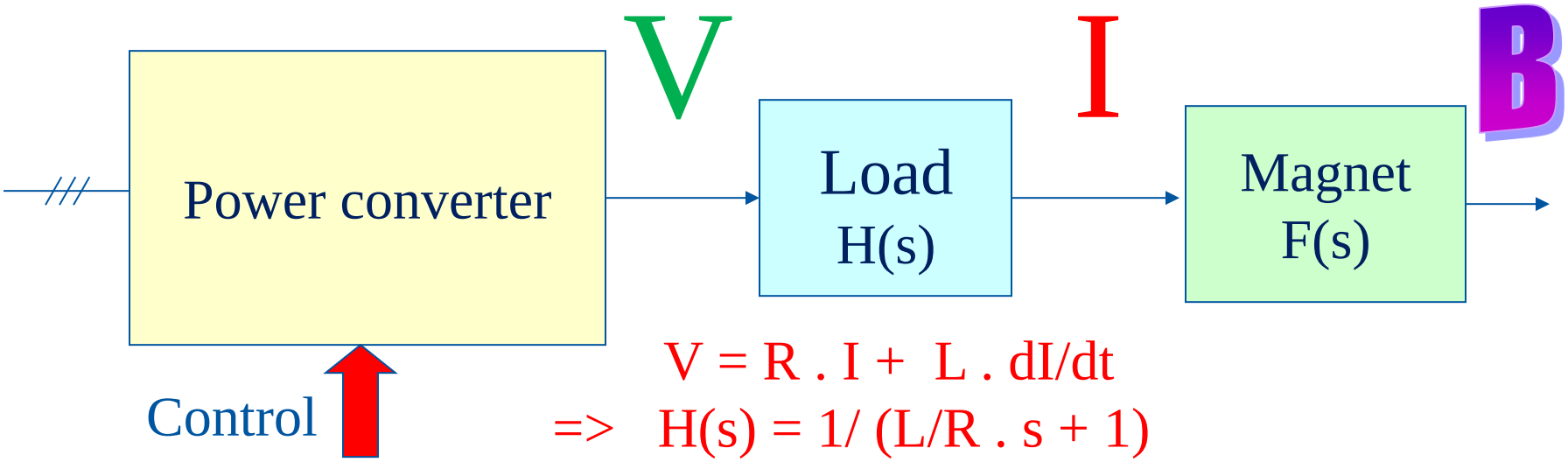

$$V = R \cdot I + L \cdot dI/dt$$

$$\Rightarrow \quad H(s) = 1/ (L/R \cdot s + 1)$$

Voltage ripple is defined by the power supply

Current ripple : load transfer function (cables & magnet)

B-Field ripple : magnet transfer function (vacuum chamber,…)

Current ripple
Depends of the load

Grounding

Particles accelerators are very sensitive to EMC (conducted and radiated noise).

Need a meshed earth !

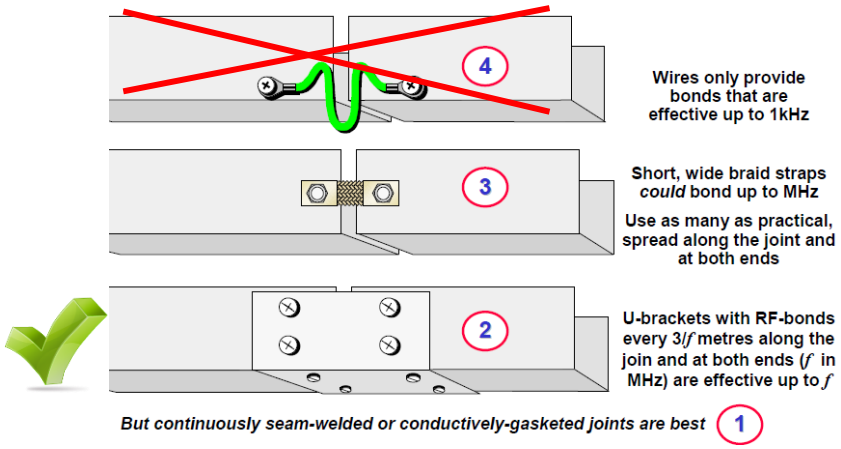

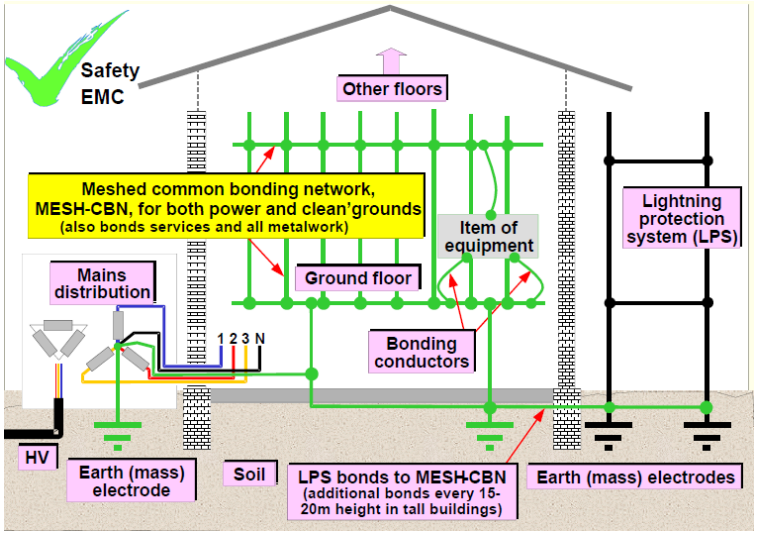

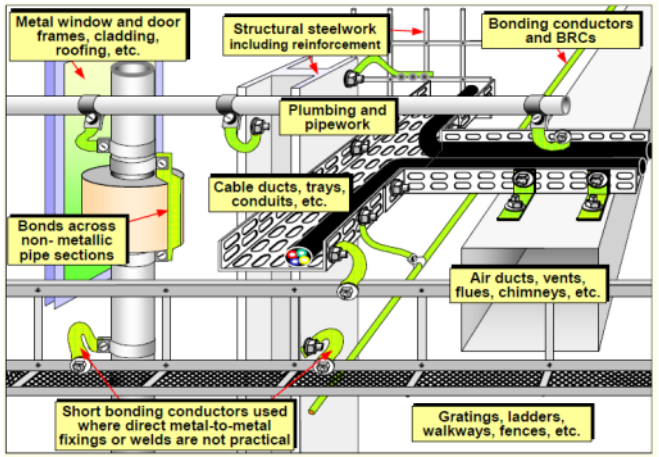

http://indico.cern.ch/getFile.py/access?contribId=44&sessionId=9&resId=0&materialId=slides&confId=85851

Grounding

Appling good EMC rules to power supplies:

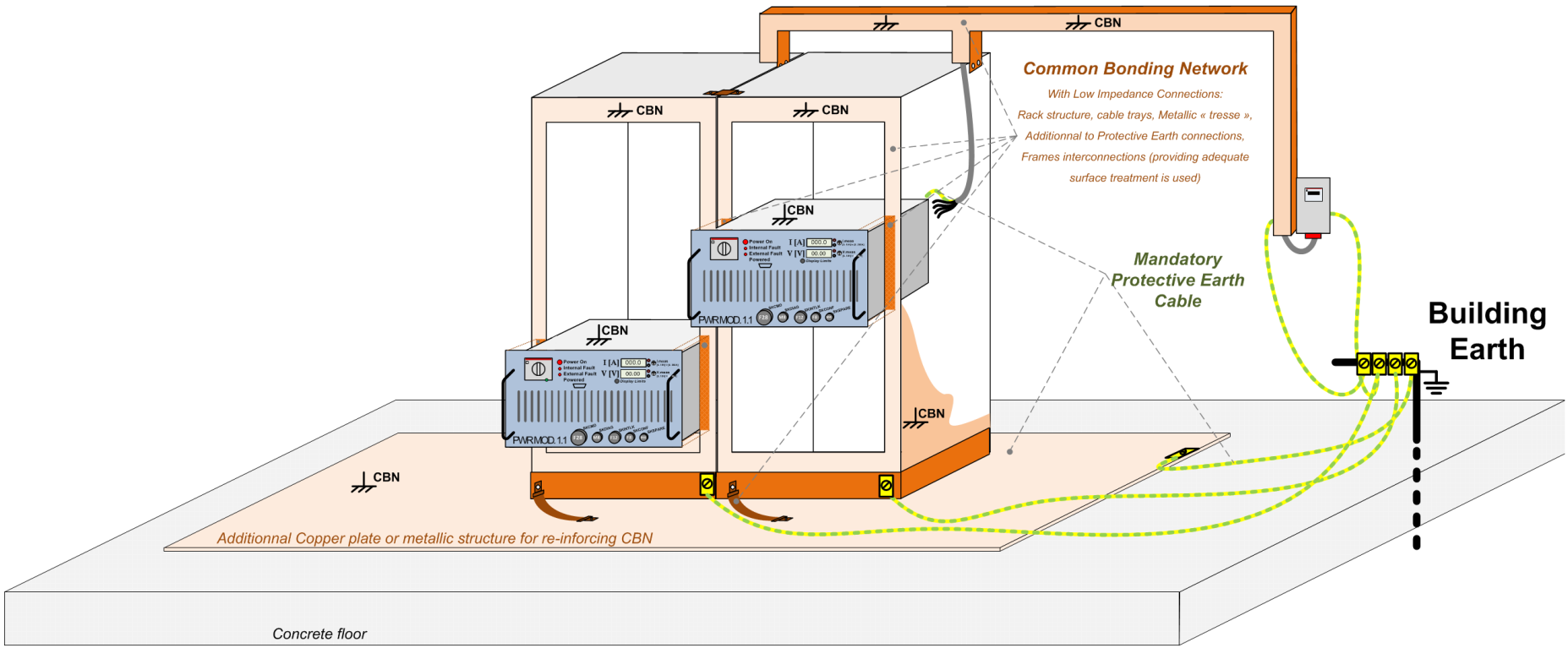

What do an accelerator physicist should specify ?

If you have already designed the magnets without including power supply engineer, you have already made a mistake!

Powering optimization plays with magnet parameters

The power engineer has to be included in the accelerator design from the beginning!

What do an accelerator physicist should specify ?

Magnet parameters:

- Inductance, in mH
- Resistance, in mΩ
- Maximum current
- Voltage rating
- DC cable resistance, in mΩ

much better, magnet model including saturation effect

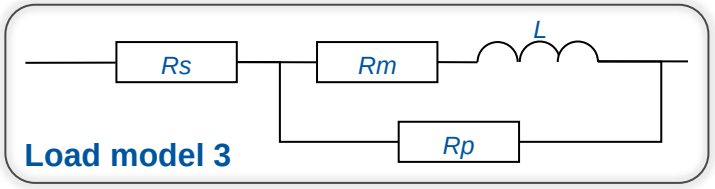

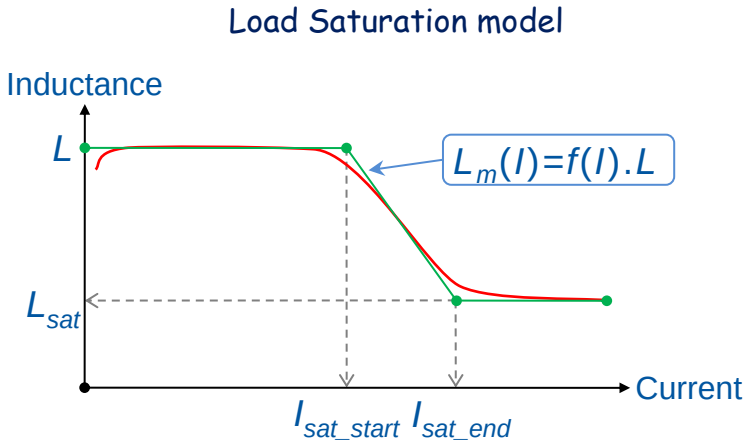

What do an accelerator physicist should specify ?

Magnet operation:

- Precision class
- Type of control: Current / B-field
- Maximum current ripple
- Complete cycle
  - Injection current
  - Maximum dI/dt, ramp-up
  - Maximum flat top current
  - Maximum dI/dt, ramp-down
  - Return current
  - Cycle time
- Degauss cycle / pre-cycle
- Magnet protection system

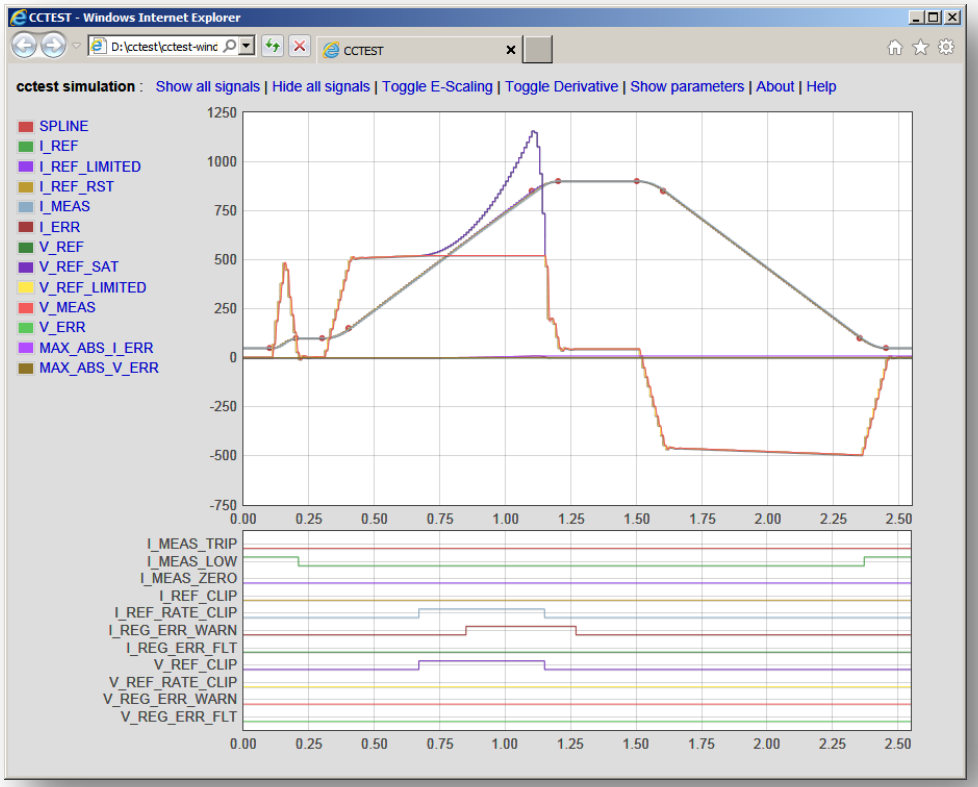

Power supply functional specification

Power supply delivery

From power supply functional specification

https://edms.cern.ch/document/829344/3

Power supply design

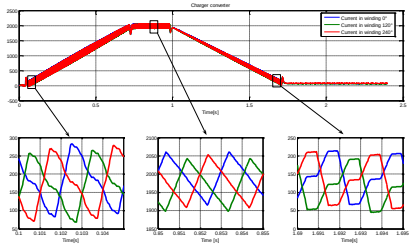

simulation

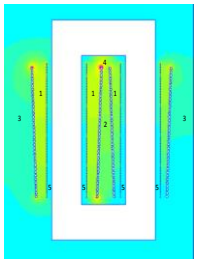

Component design

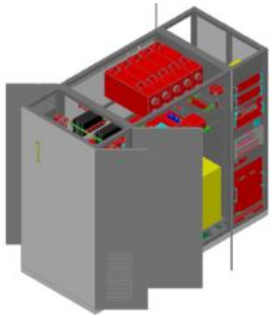

3D mechanical integration

Production

Laboratory Tests

On site commissioning

Minimum 18 months

Summary

Power supplies are the main actuators of a particles accelerator.
The performances for particles accelerators are very challenging.

Creativity on many technical fields are required!

More training :

Special CAS on power converters

WikipediA
The Free Encyclopedia

7 – 14 May 2014

Baden (CH)