Design of the analog front-end for the Timepix3 and Smallpix hybrid pixel detectors in 130nm CMOS technology

Massimiliano De Gaspari
CERN, European Organization for Nuclear Research
Geneva, Switzerland

Presented at TWEPP 2013, Perugia, Sept 24th

Outline

- Introduction to Timepix3
- Front-end architecture
- Timepix3: first tests
- Smallpix
- Summary

Timepix3

General features	
Pixel #	256x256
Pixel size	55µmx55µm
Design	CERN, NIKHEF, Bonn University
Main Applications	Fast readout of solid-state pixelated sensors
	Readout of gaseous detectors (TPC)
	Vertex Locator for LHCb (further development into VELOpix)
	Power pulsing tests for the Linear Collider
	Dosimetry
What's new wrt Timepix1	2 main measurement modes: - simultaneous 10bit TOT and 18bit ToA - 10bit event counting and 14bit integral TOT
	TOT monotonic for large positive charges
	Fast ToA for time stamping with a precision of 1.56ns
	Data-driven readout: dead-time free, for a maximum hit rate of 40Mhits/s/cm²
	Shutdown/wake-up features for power pulsing tests on a full system

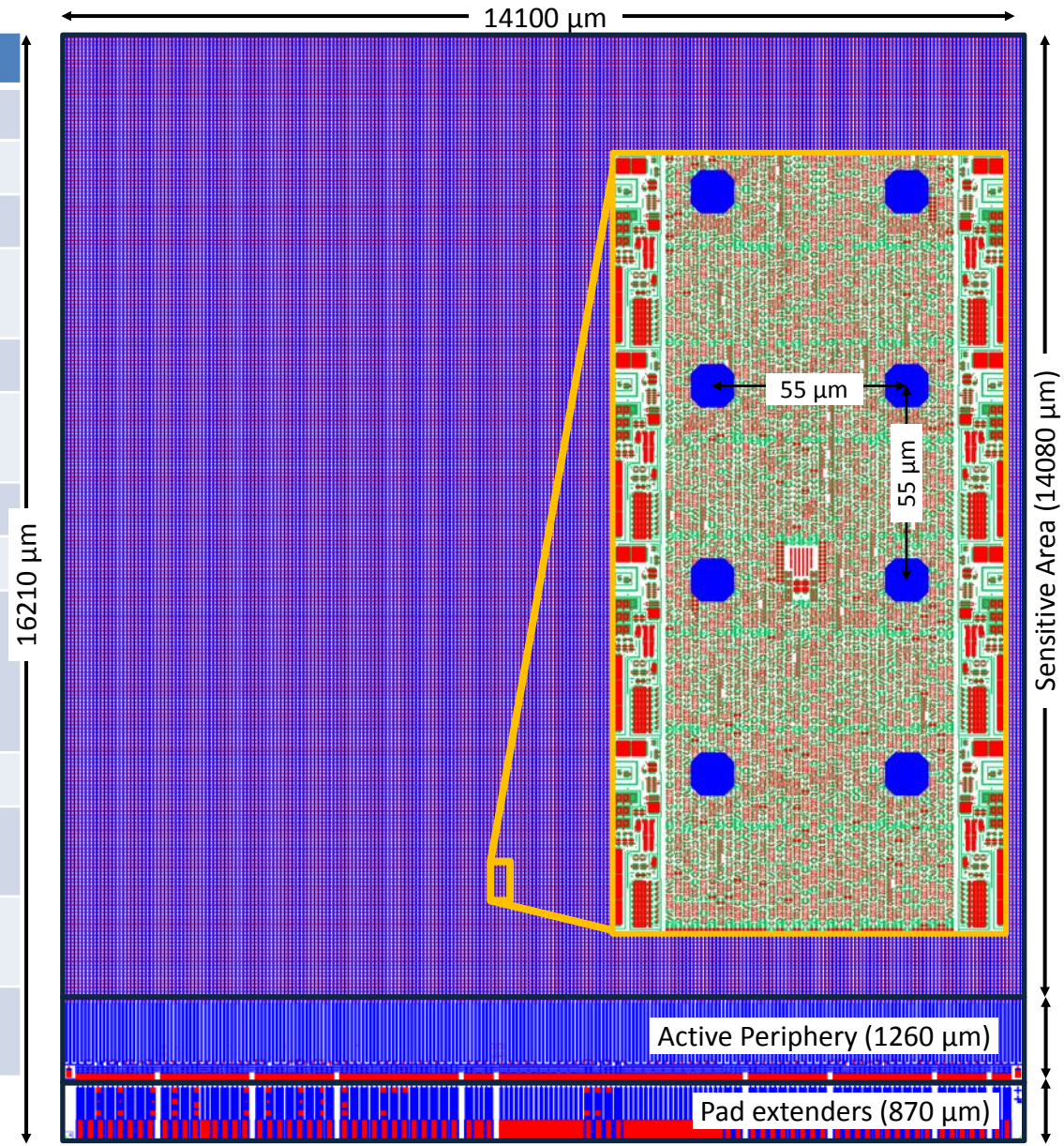

Timepix3: fast ToA measurement

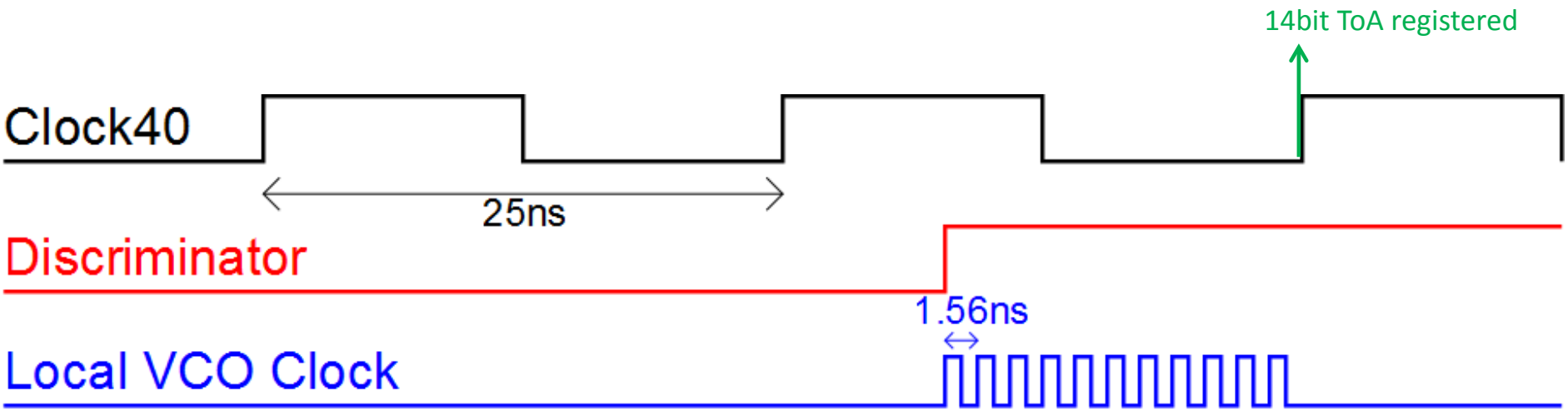

40MHz clock always running (14bit ToA)

One 640MHz VCO per superpixel (2x4 pixels) active only when a discriminator fires (4bit fast ToA)

More information in these posters:

- "Digital Column Readout Architectures for Hybrid Pixel Detector Readout Chips" by Tuomas Sakari Poikela
- "The Charge Pump PLL Clock Generator Designed for the 1.56 ns Bin Size Time-to-Digital Converter Pixel Array of Timepix3 Readout Chip" by Yunan Fu

Outline

- Introduction to Timepix3
- Front-end architecture
- Timepix3: first tests
- Smallpix
- Summary

Front-end architecture in use

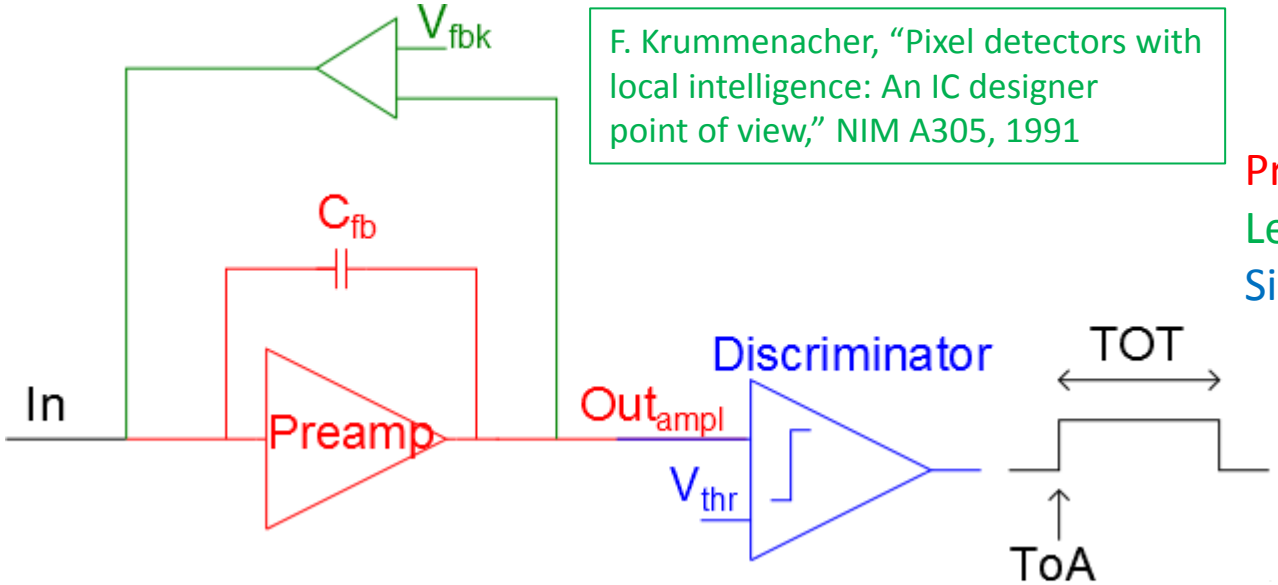

F. Krummenacher, "Pixel detectors with local intelligence: An IC designer point of view," NIM A305, 1991

Preamplifier
Leakage current compensation
Single-threshold discriminator

The output of the discriminator is used to measure Time-Over-Threshold (proportional to the energy deposited in the pixel) and/or Time of Arrival (time stamping of the hit).

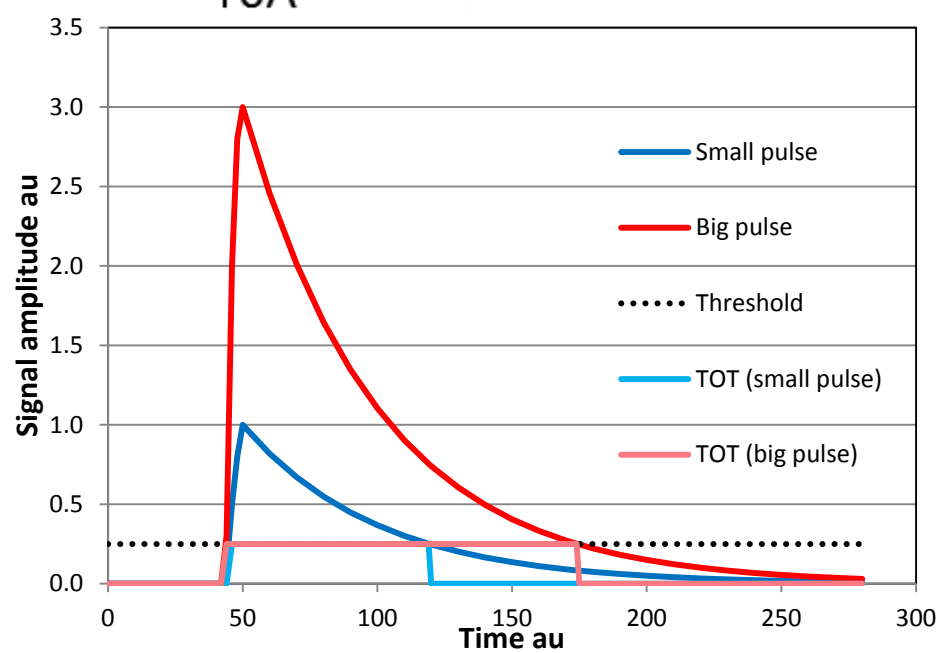

Timepix3: front-end specifications

Parameter	Value	Notes
Area	55μmx13.5μm	
Signal polarity	Positive and negative	
Detector capacitance	~50fF	25fF to 100fF
Leakage current	-5nA to +20nA	
Amplitude linearity	Not required	Time measurement
TOT monotonicity	Yes, up to 300kh^{+}	
ToA jitter and mismatch	Compatible with 1.56ns resolution	Gas detector applications
Time-to-peak	Target 25ns	In view of VELOpix
Noise + threshold mismatch	~90e^{-}	for a minimum threshold ~500e^{-}
Equalization DACs	4bit	Compensate pixel-to-pixel threshold mismatch
Power consumption	12μW/pixel	

Timepix3: front-end architecture

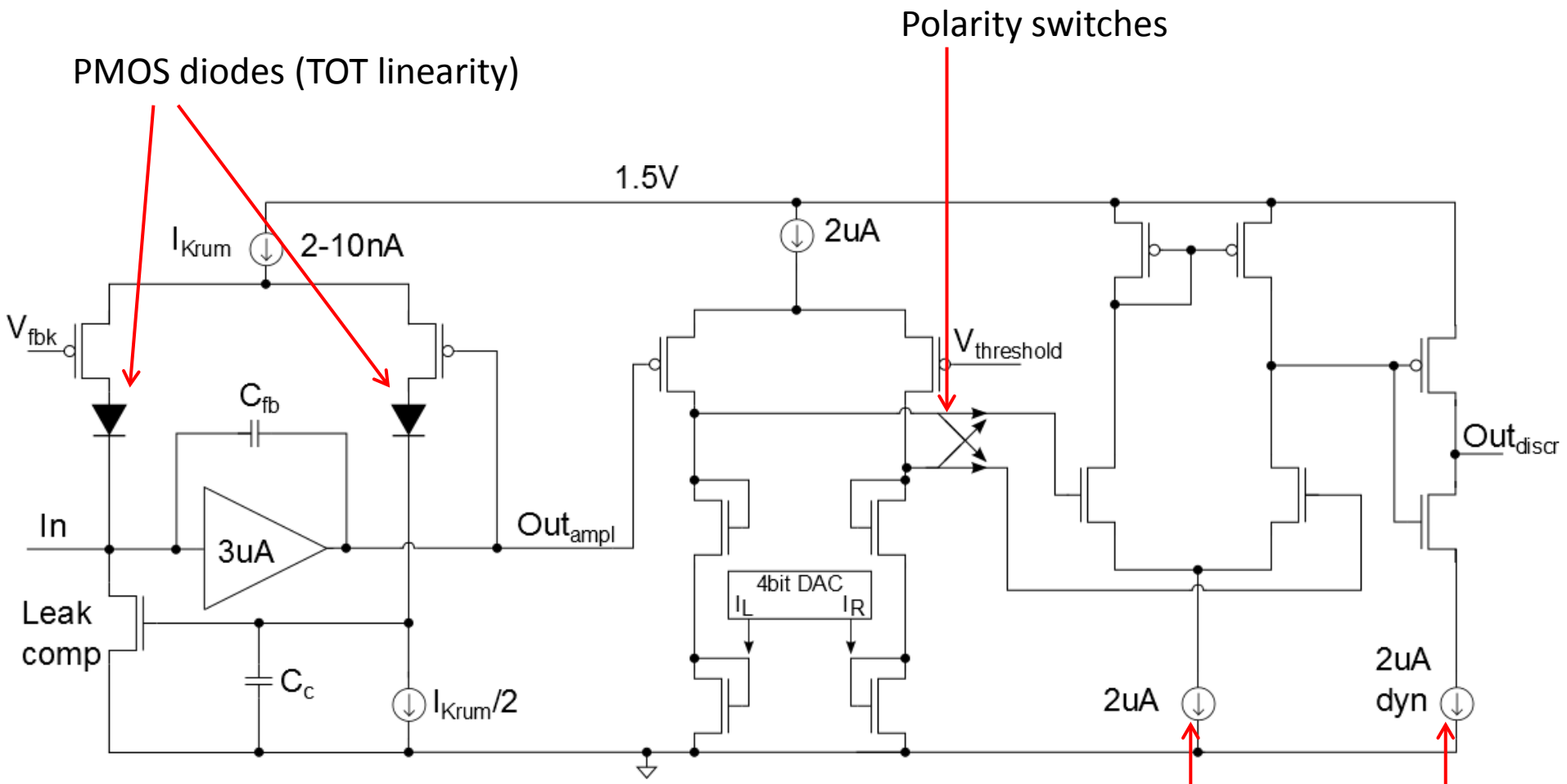

Preamplifier + Krummenacher feedback

Discriminator OTA + Equalization DAC (constant total current)

Discriminator 1st stage 2nd stage

Timepix3: preamplifier

	Timepix	Timepix3	Notes
Preamplifier	Differential	Single-ended	More efficient power usage
C_{fb}	8fF	3fF	Larger gain
Input pad size & positioning	20x20µm, over analog domain	12x12µm, over digital domain	Minimize parasitics, shielding to analog ground

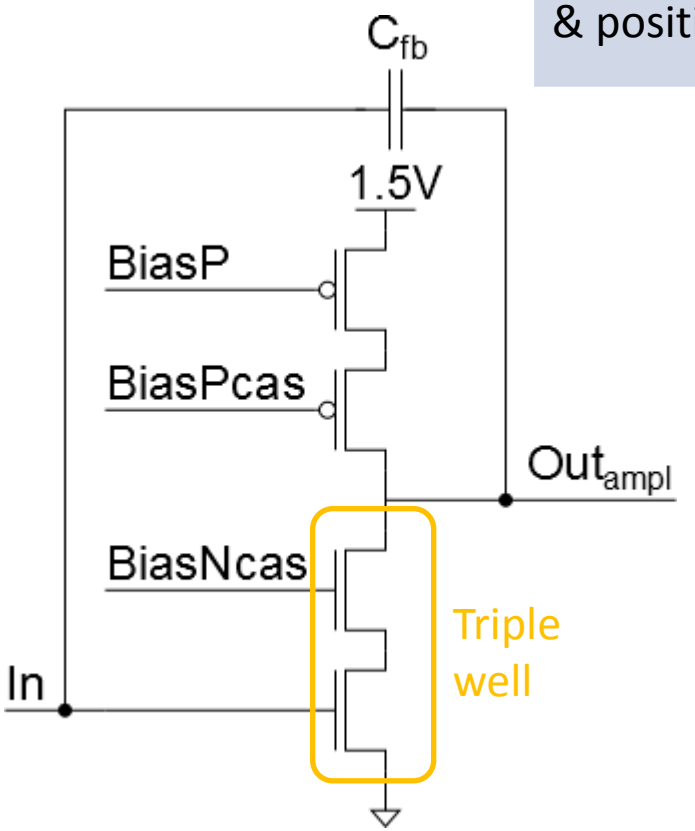

TOT monotonicity

TOT monotonicity issue for large positive input charges:
Qin>100kh^{+} → V(In)>V(NodeX) → current through the wrong path

Added diode-connected PMOS transistors → good current path

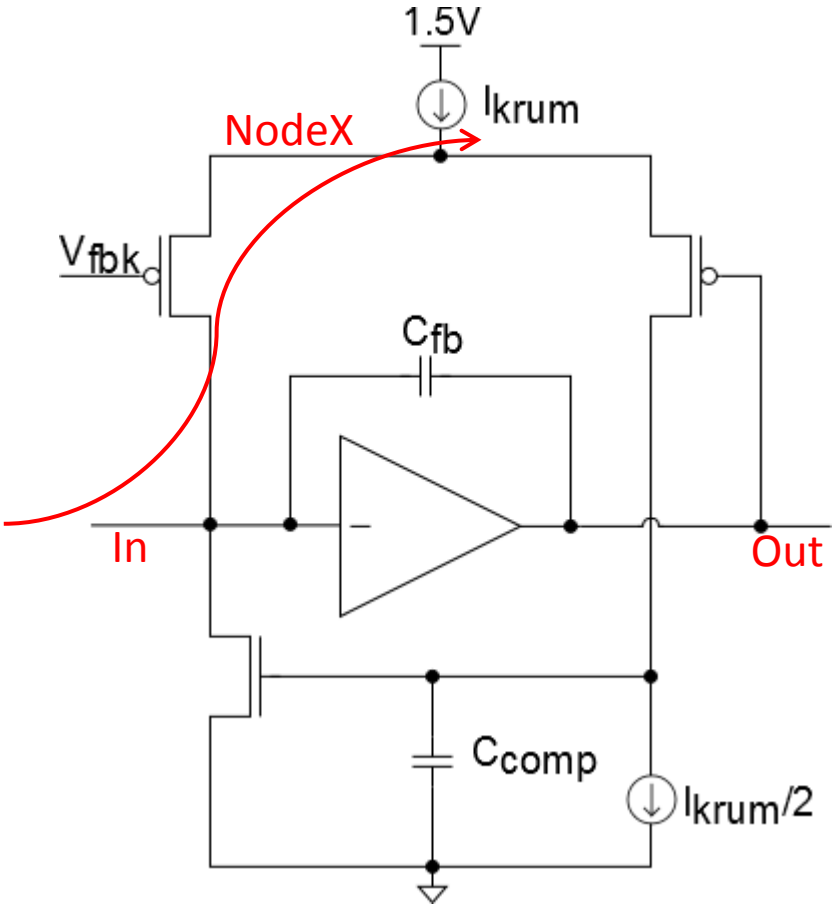

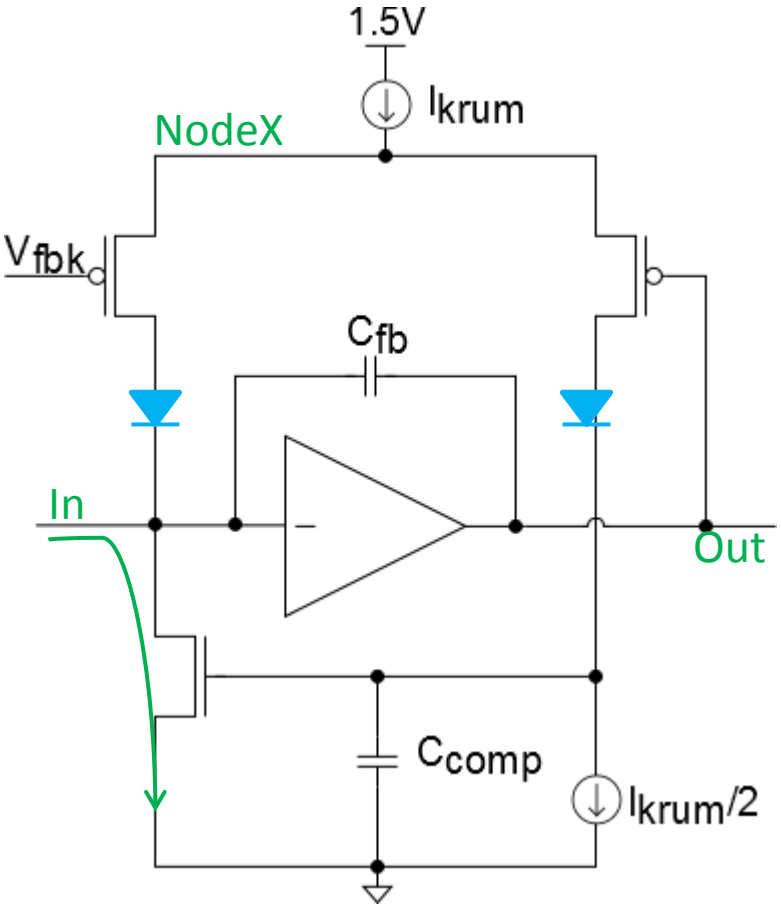

TOT monotonicity

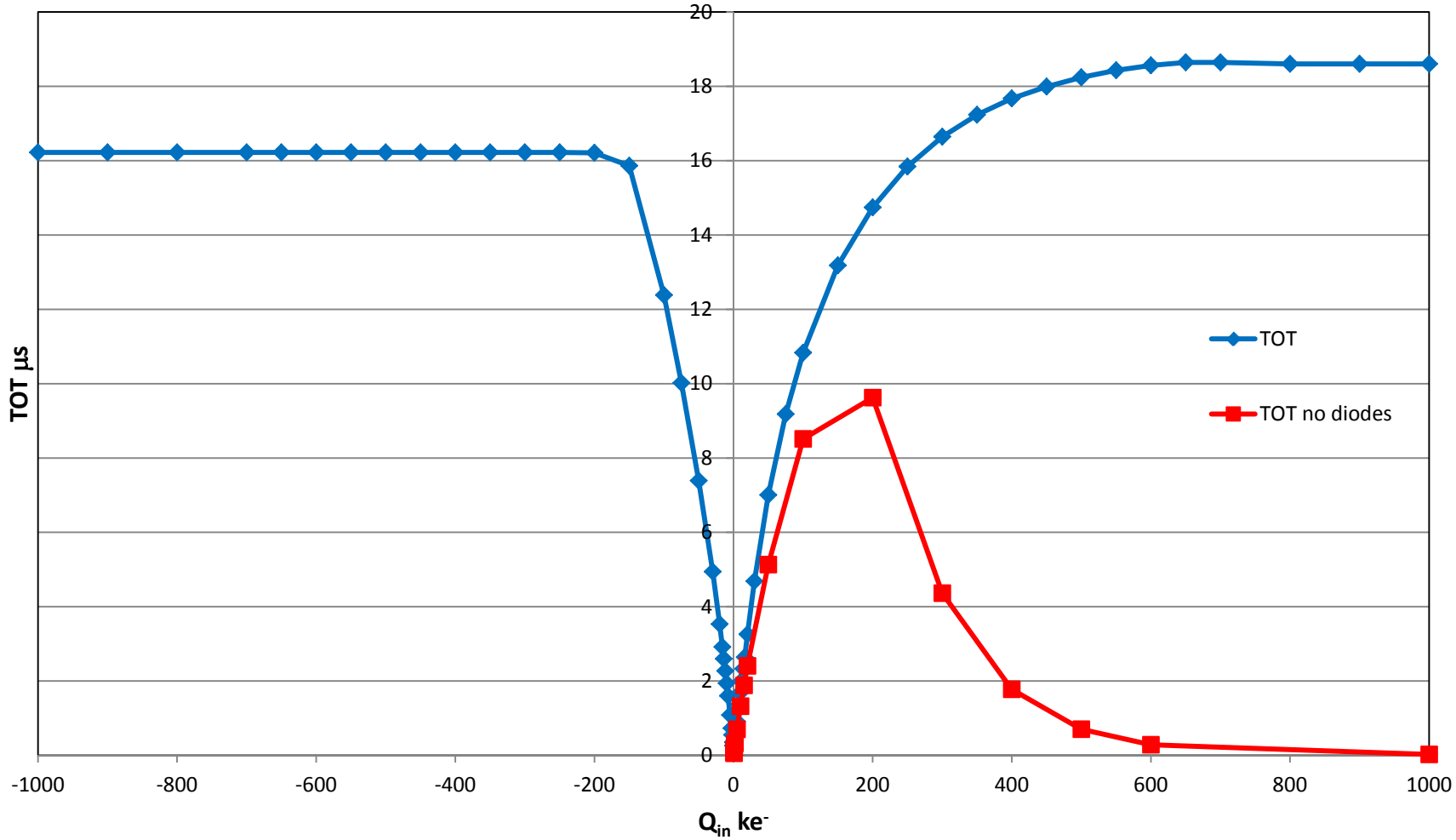

Comparison between TOT with and without monotonicity PMOS diodes.

Fast ToA resolution

Time resolution of 1.56ns → low ToA jitter and mismatch

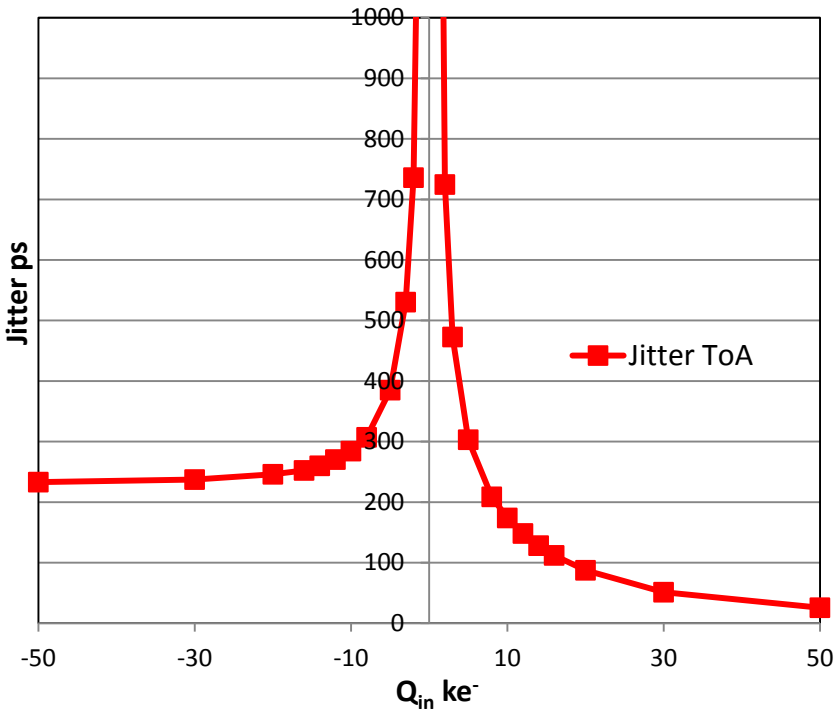

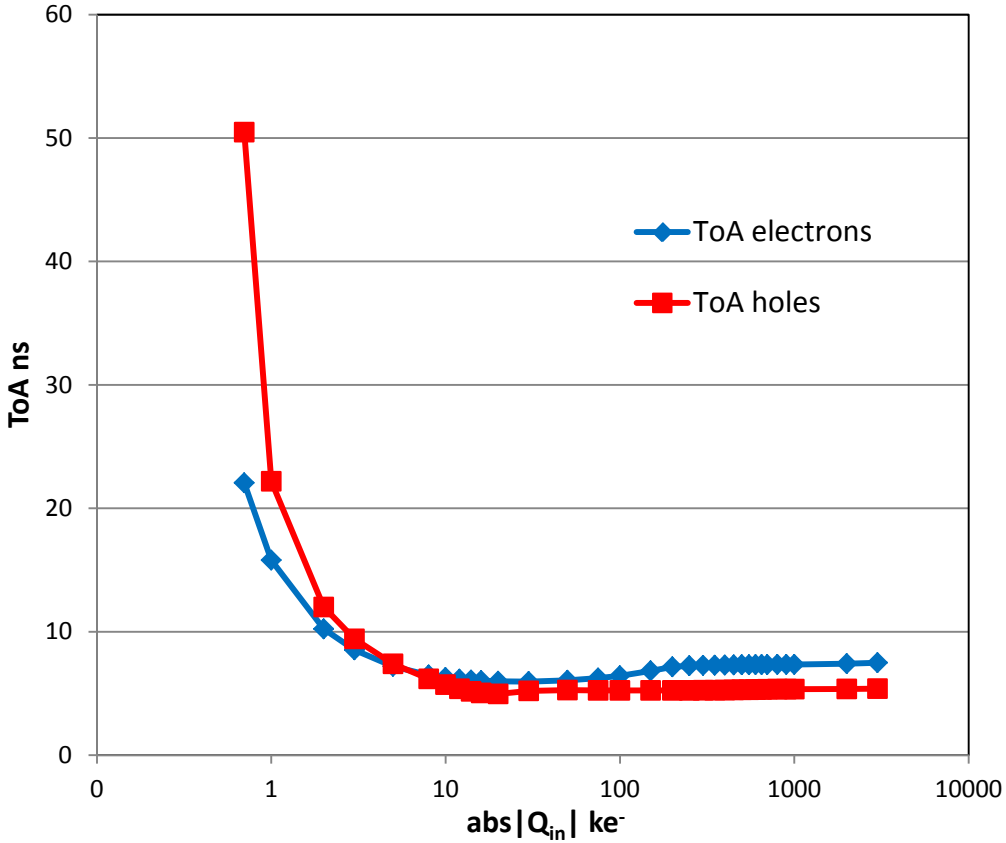

Pixel-to-pixel timing mismatch is simulated to be lower than 500ps for charges of 10ke$^-$

Noise coupling digital->analog

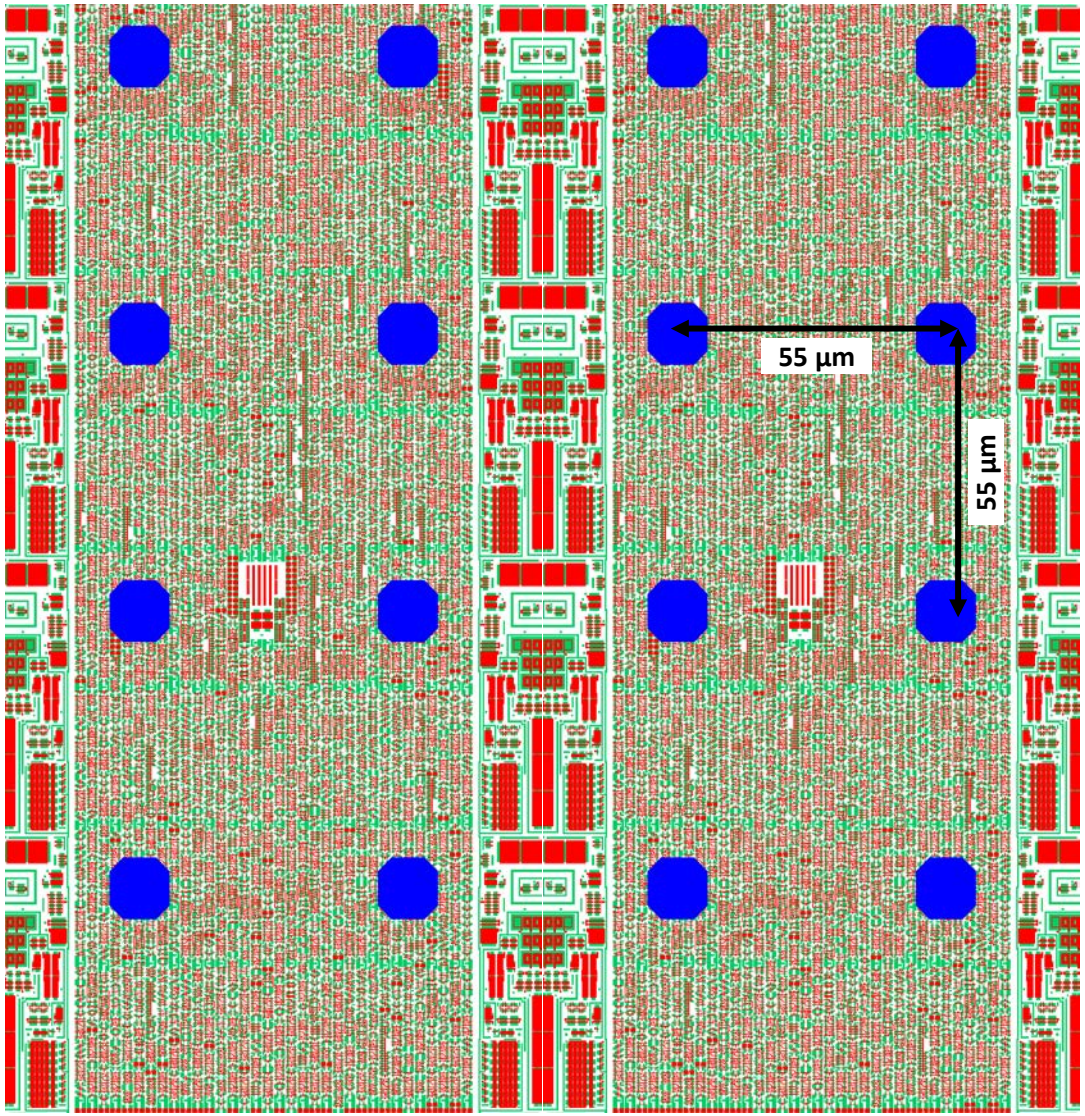

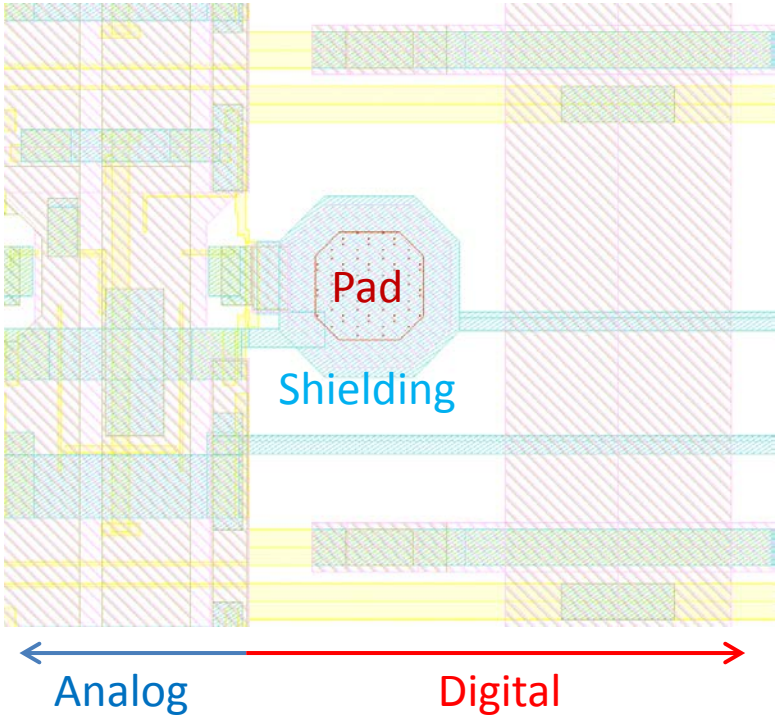

Digital noise

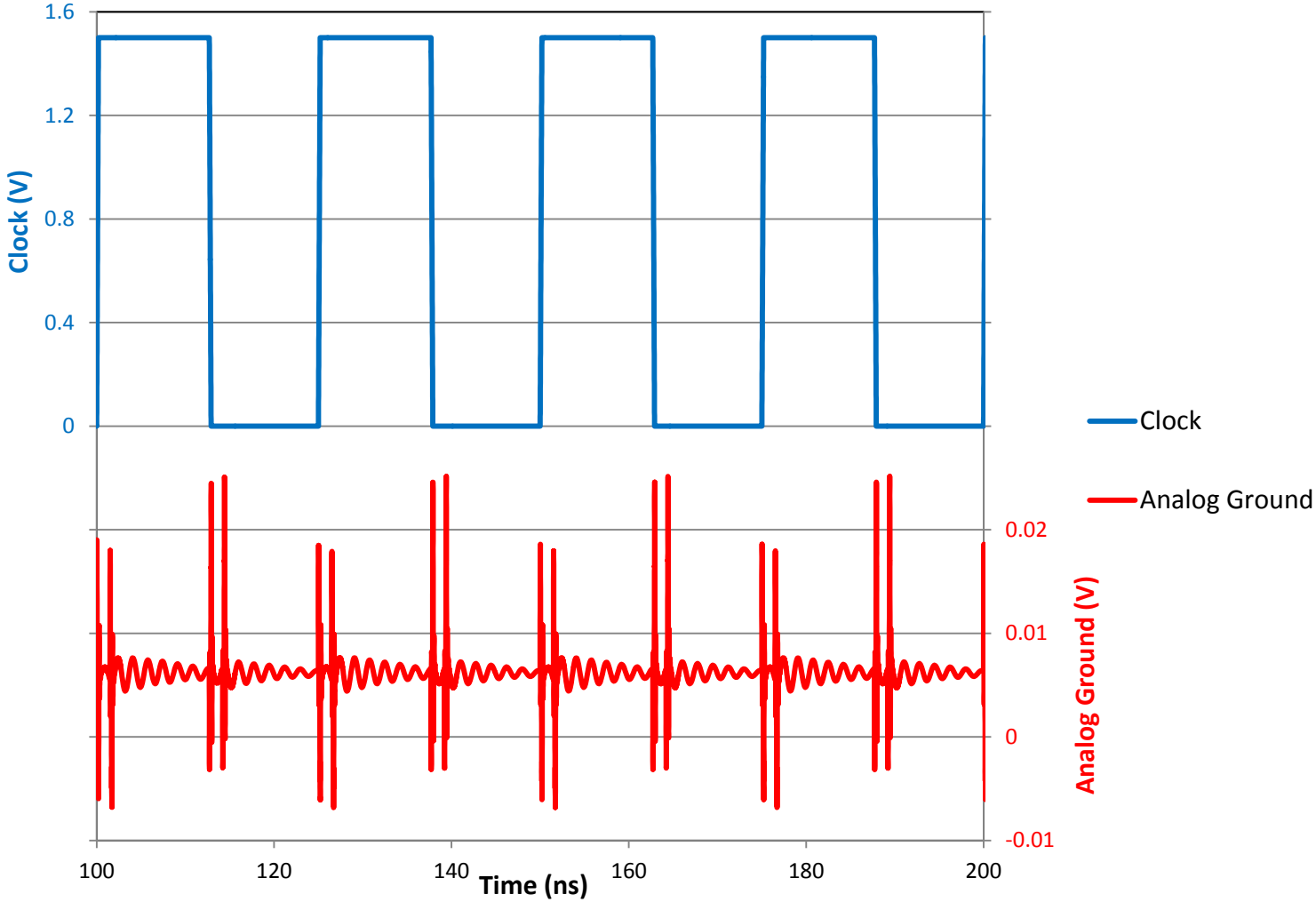

Simulation models include wirebond parasitics, decoupling capacitors, resistances and parasitic capacitances of the metal lines running along the columns in the pixel matrix.

Noise coupling

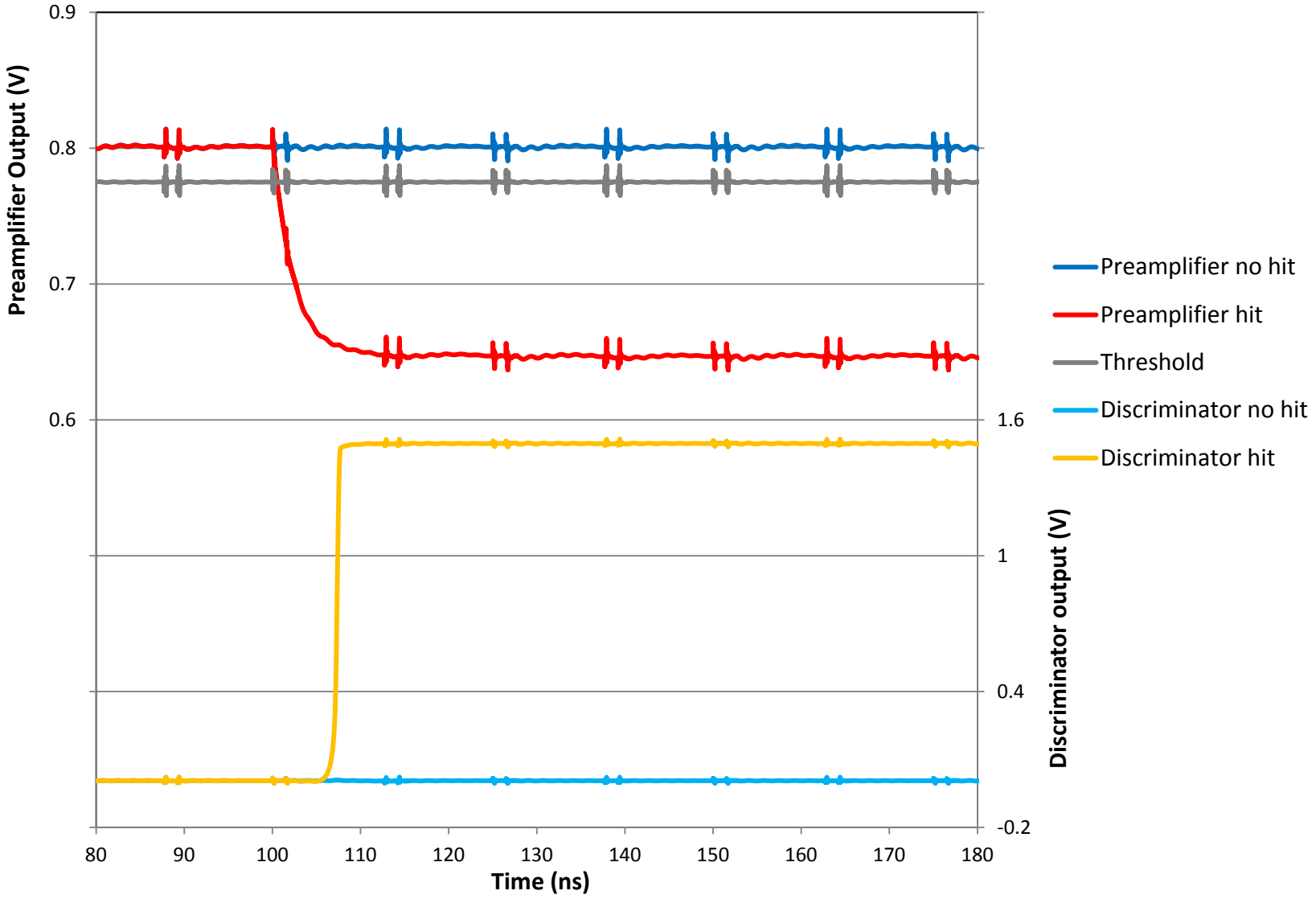

Power pulsing

Analog domain:
switch dynamically between nominal and shutdown bias currents

Digital domain:
gate the clock to the pixel array

Transition times programmable between 800ns and 1.28ms

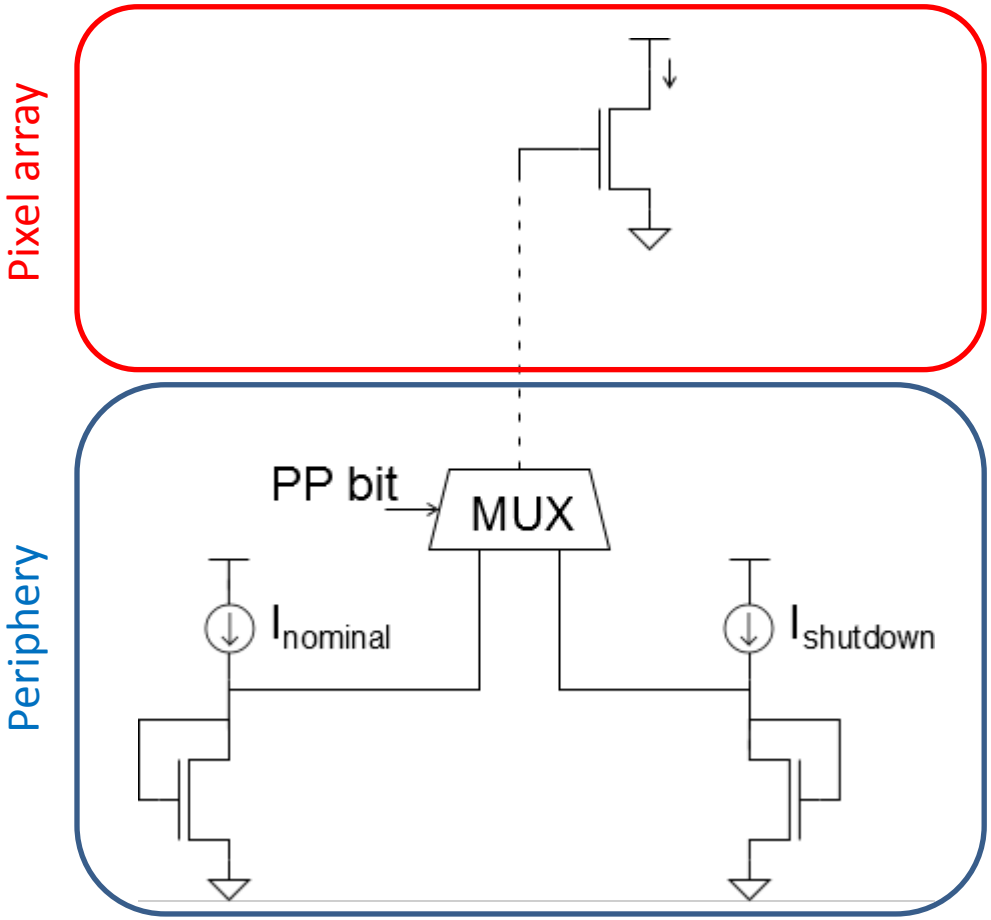

Outline

- Introduction to Timepix3
- Front-end architecture
- Timepix3: first tests
- Smallpix
- Summary

Preliminary test results

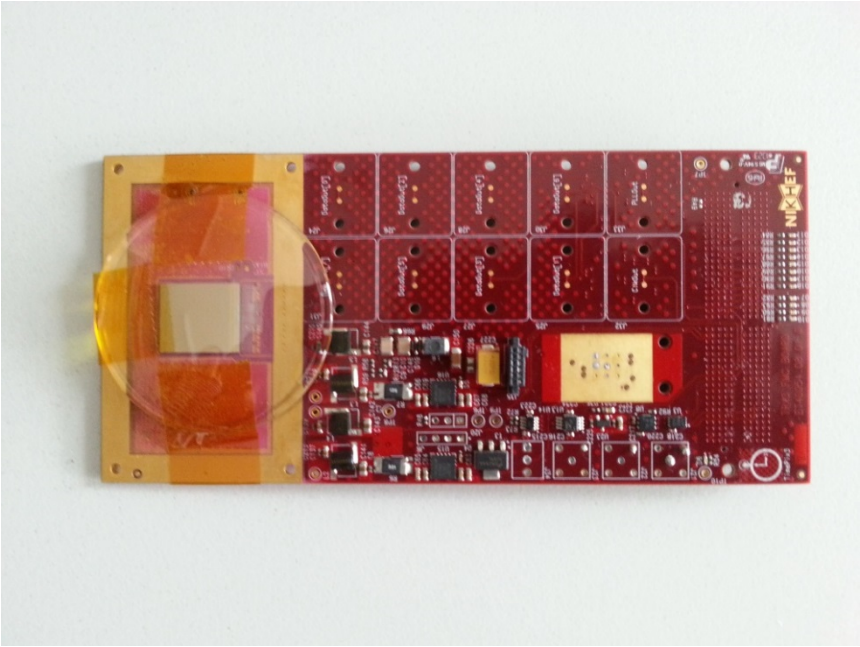

2 chips under test
since beginning of September

- Periphery tested at 95%, no issues detected
- Data readout functional at full speed (640MHz)
- Current consumption:
  - Analog 450mA
  - Digital 370mA (in data driven mode and no pulses injected)

Credits:
Bas van der Heijden, Frans Schreuder, Henk Boterenbrood (NIKHEF)
Szymon Kulis (CERN)
for the SPIDR board, readout system and the plots in the next slides

S-curves: 100 pulses in Photon Counting + integral TOT mode

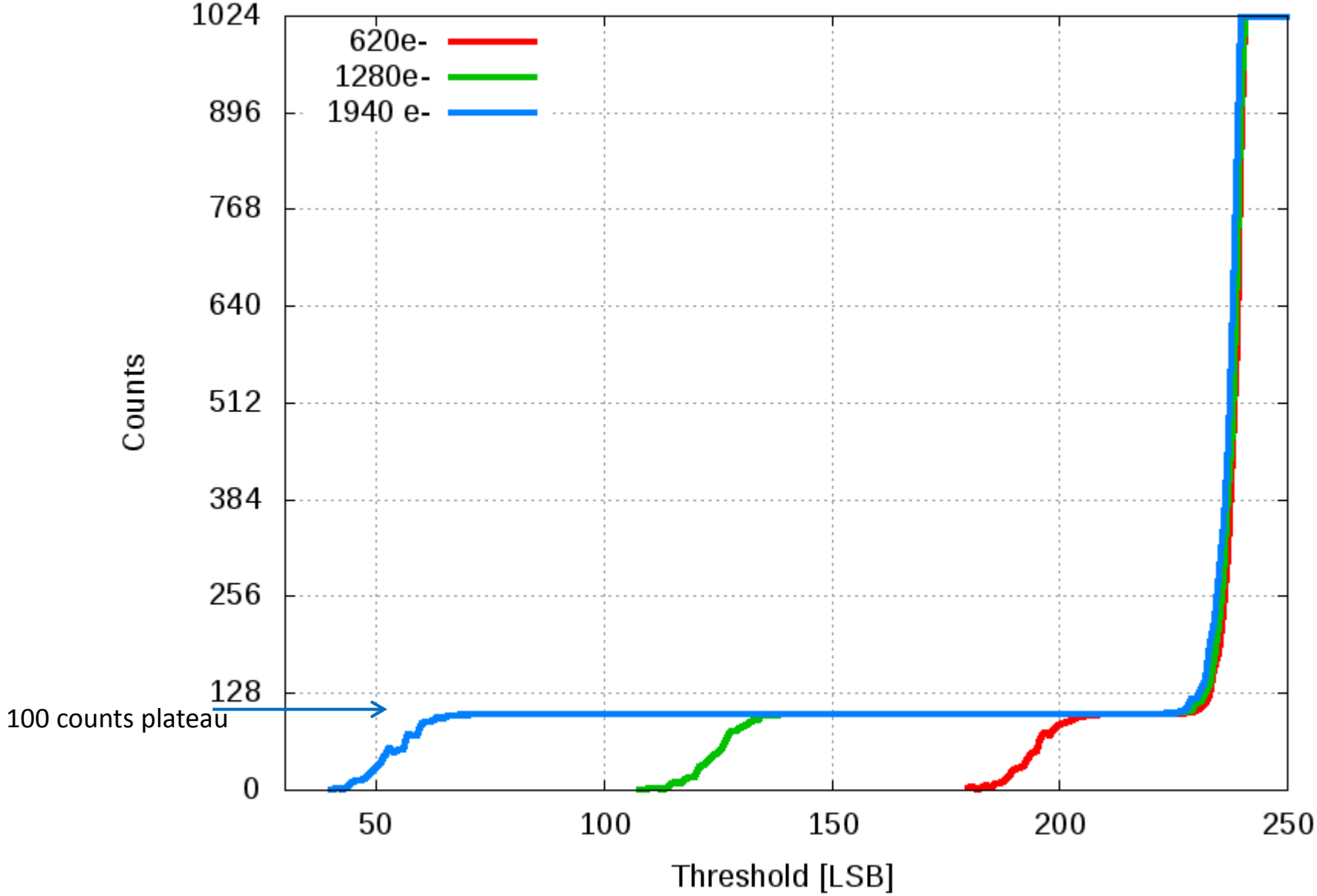

Scan of a pixel equalization DAC

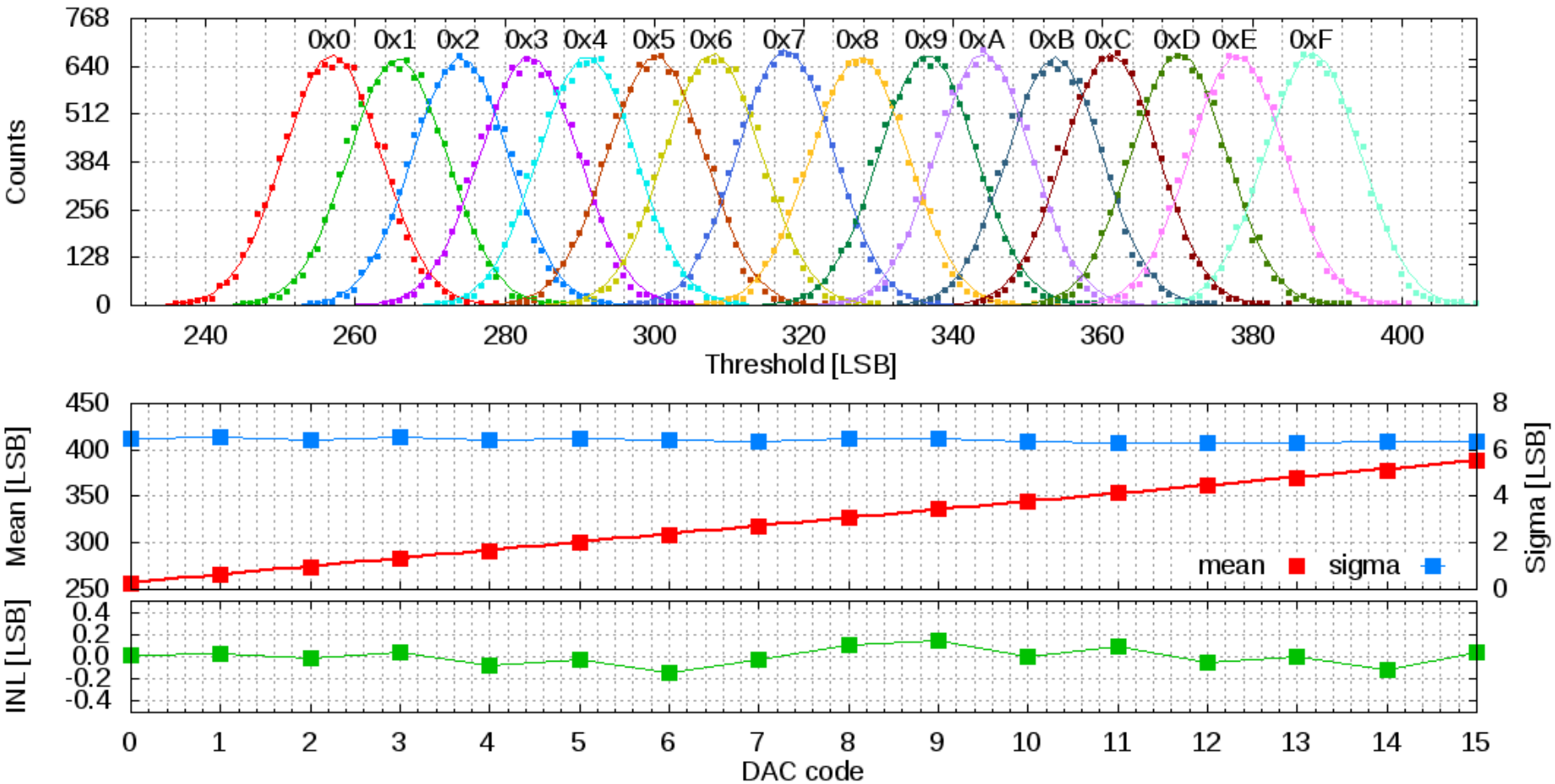

4bit equalization DAC shows very good linearity, as expected.

Noise 6.5LSB: ~65e$^-$ (better than 75e$^-$ expected), assuming 50mV/ke$^-$ gain.

Equalization results

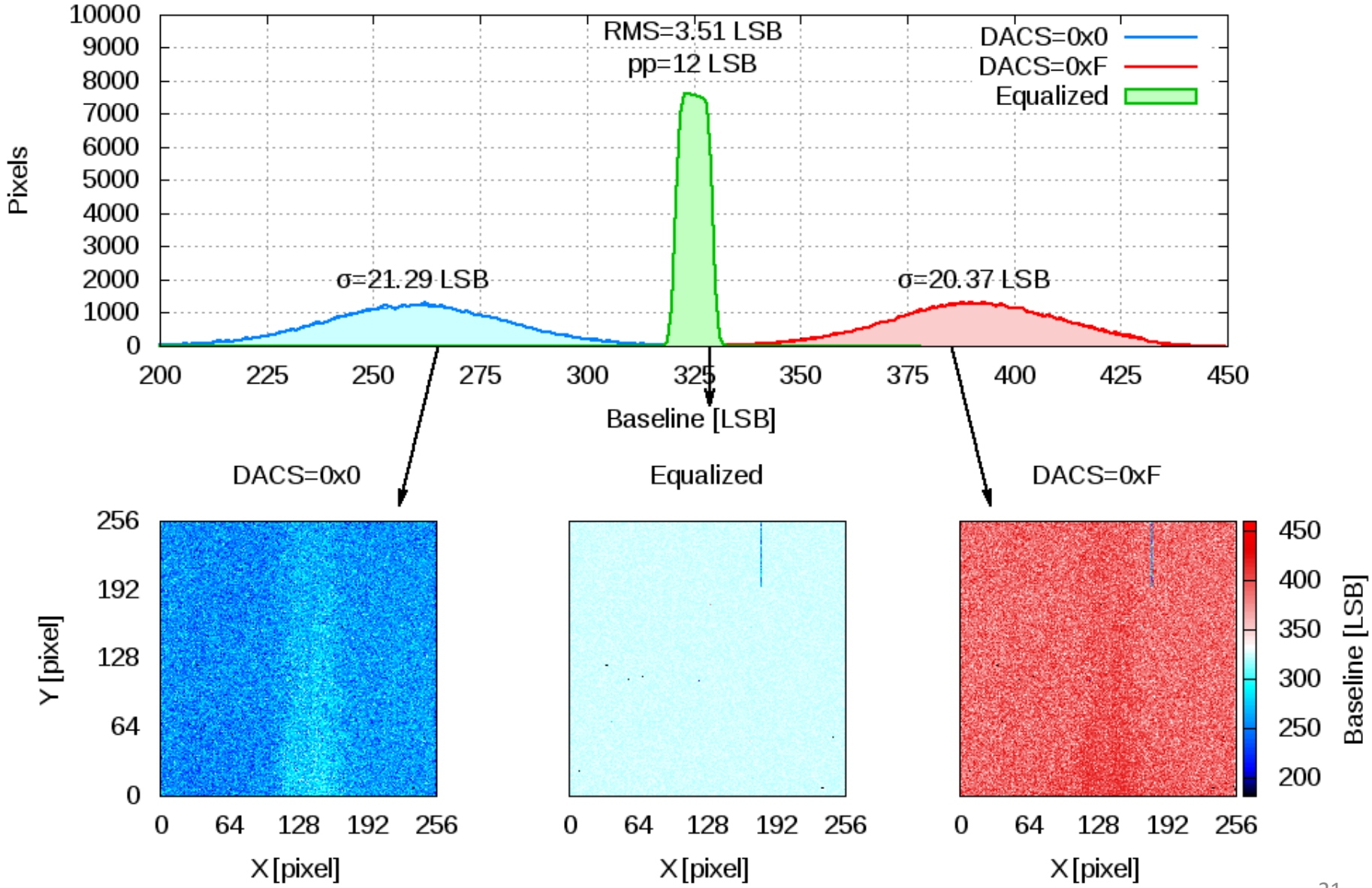

Mismatch: 178e⁻ before equalization, 30e⁻ afterwards.

Outline

- Introduction to Timepix3
- Front-end architecture
- Timepix3: first tests
- Smallpix
- Summary

Smallpix (renaming pending)

		Notes
Applications	Vertex Detector	
	Dosimetry	
	Imaging & general purpose	
Goals	Decrease pixel size (40μm?) wrt Timepix3 and Medipix3	Still providing TOT and ToA
	Array of 250k pixels (if possible)	Suitable to system tests, e.g. power pulsing
Main features foreseen today	Full Through-Silicon-Vias (TSV) connectivity	Re-distribute periphery circuitry, active area approaching 100%
	Fast OR	Triggering capability
	Data compression	Per pixel and per column
	Superpixels 2x2	Share resources, increase counters' depth
Status	Reuse Timepix3 front-end	If it proves successful
	Redesign of building blocks (bandgap, ESD protections, …)	Needed for TSV compatibility

Outline

- Introduction to Timepix3
- Front-end architecture
- Timepix3: first tests
- Smallpix
- Summary

Summary

- Front-end designed and fabricated in the full-scale Timepix3 chip.

- Tests recently started. So far it looks functional:
  - Power ok
  - Noise 65e^- good
  - Mismatch 30e^- ok
  - Noise + mismatch = ~71e^-: minimum threshold around 430e^-?
  - These are preliminary measurements!

- If no major issue shows up, this front-end can be re-used for the Smallpix chip. Layout to be modified to accommodate in a different form factor.

Thanks for your time and attention!

- Front-end designed and fabricated in the full-scale Timepix3 chip.

- Tests recently started. So far it looks functional:
  - Power ok
  - Noise 65e^- good
  - Mismatch 30e^- ok
  - Noise + mismatch = ~71e^-: minimum threshold around 430e^-?
  - These are preliminary measurements!

- If no major issue shows up, this front-end can be re-used for the Smallpix chip. Layout to be modified to accommodate in a different form factor.

Massimiliano De Gaspari for the CERN Medipix team:
Jerome Alozy, Rafael Ballabriga, Michael Campbell, Erik Fröjdh, John Idarraga, Szymon Kulis, Xavier Llopart, Tuomas Poikela, Pierpaolo Valerio, Winnie Wong.

Outline

- Back up slides

Timepix3: floorplan

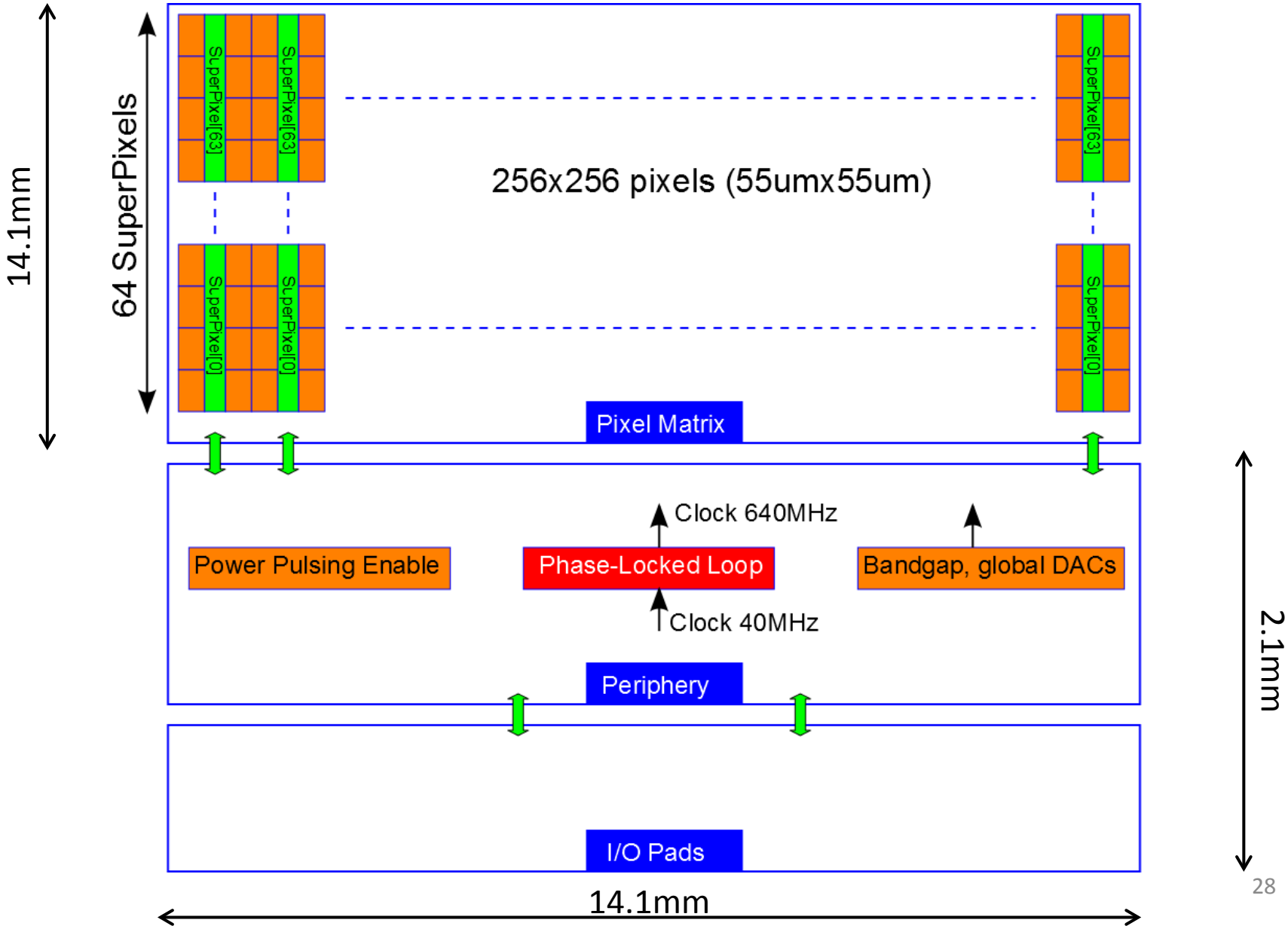

Examples: preamplifier output

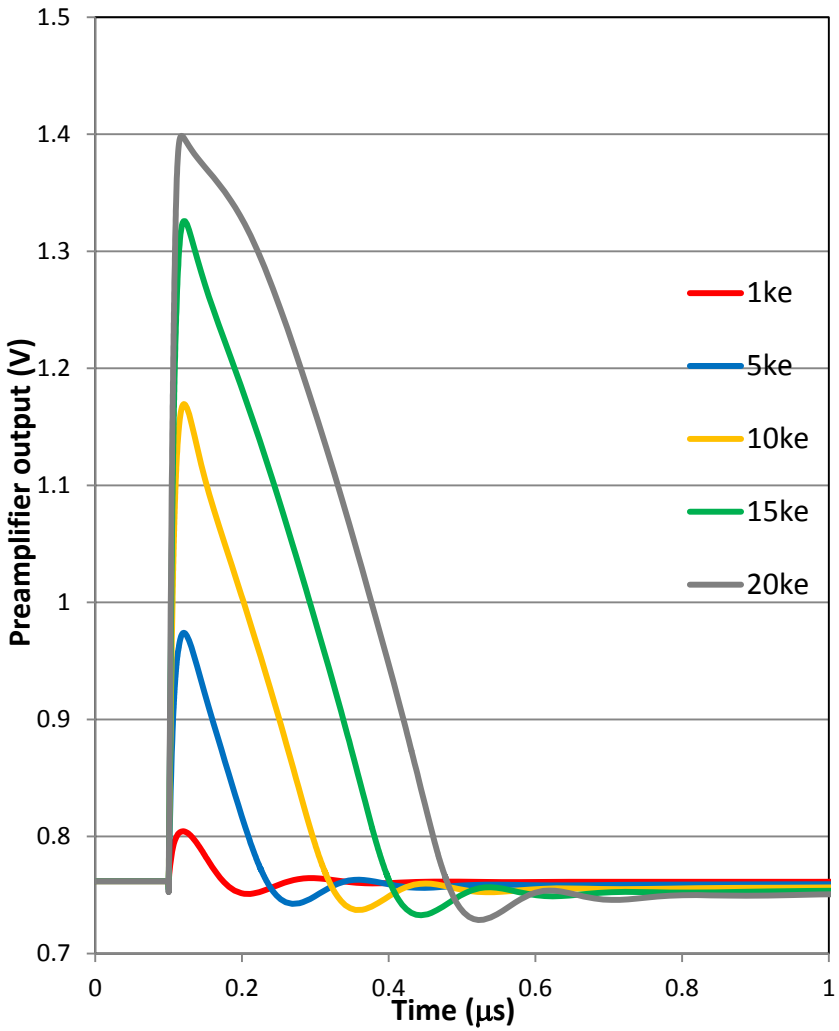

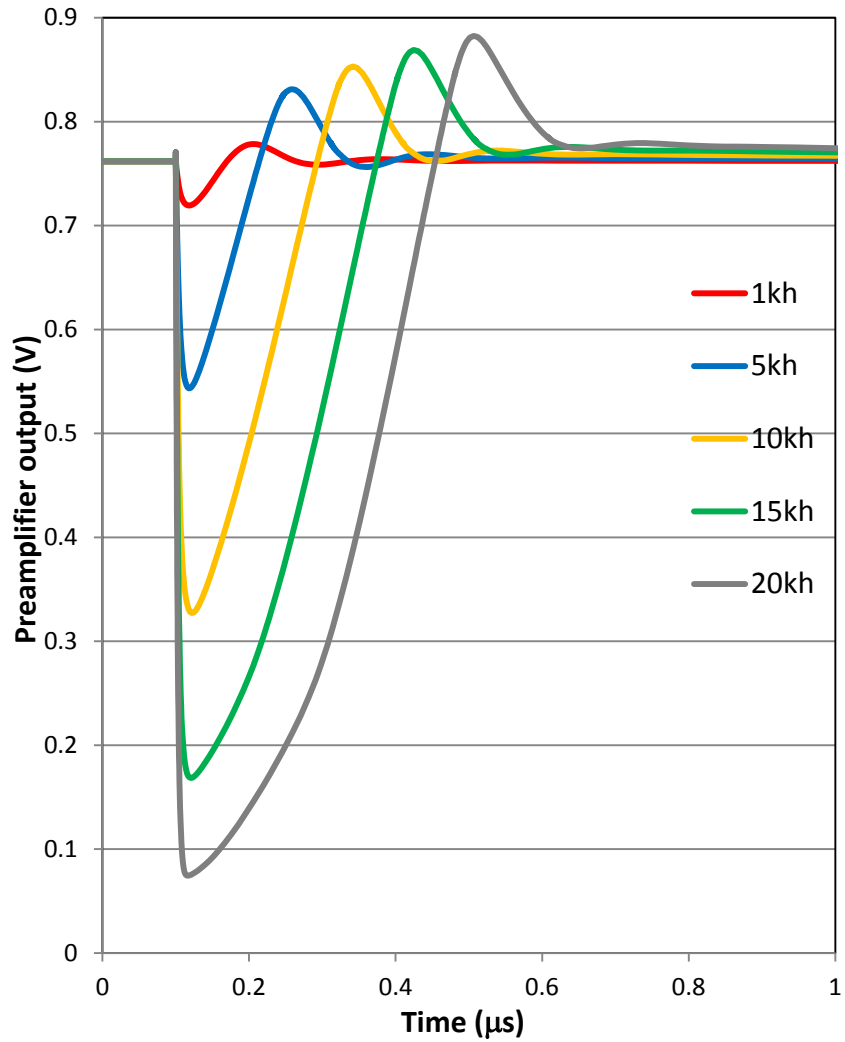

Preamplifier in saturation for input charges >15ke$^-$.

Preamplifier + leakage compensation

Krummenacher feedback:

- Good compensation of positive leakage currents (holes)
- Compensation of electron currents depending on the available I_{krum}.

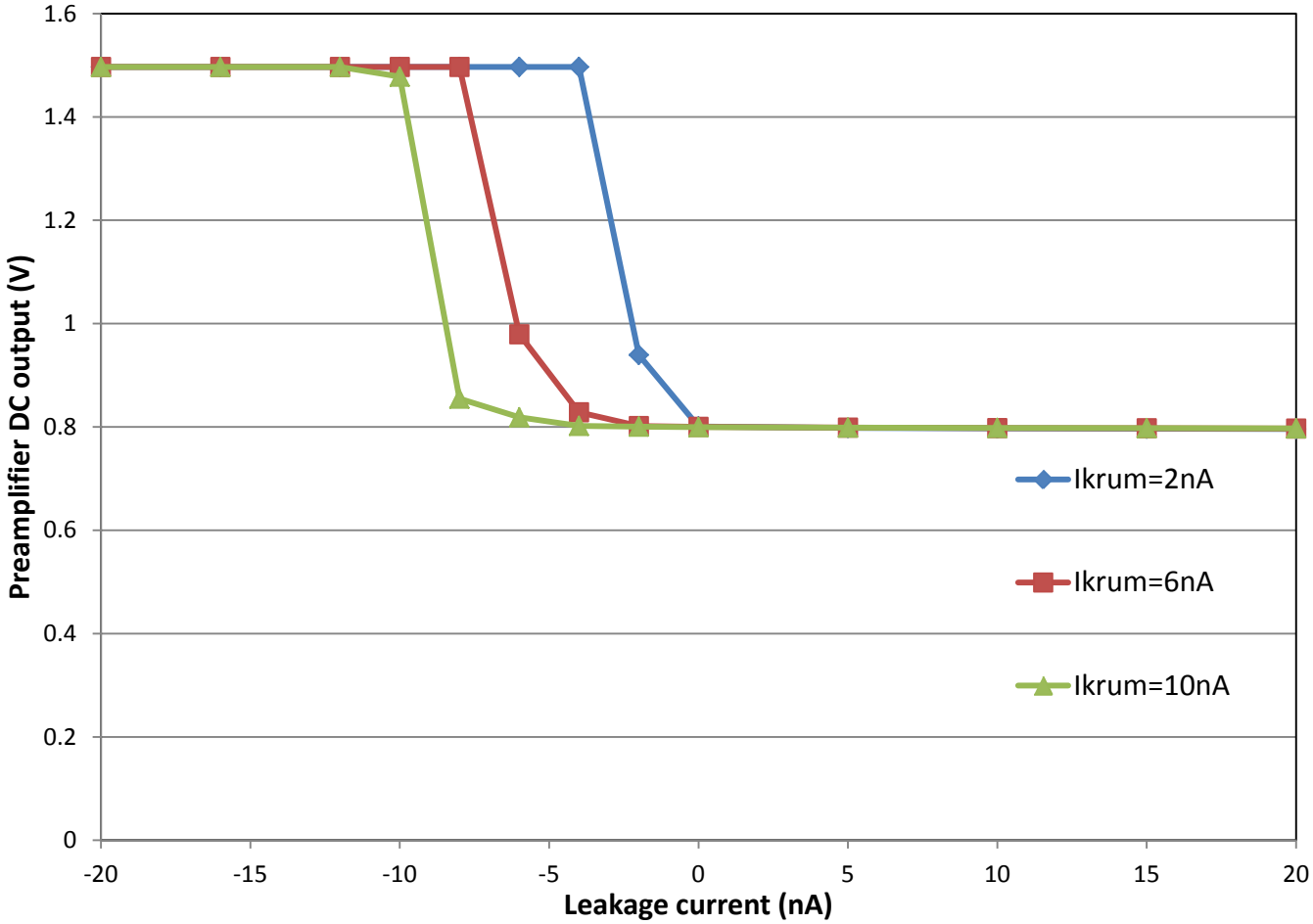

Noise coupling digital->analog

Limited area available: input pad on top of the digital pixel
Input pad: 12x12µm (was 20x20µm in previous chips)

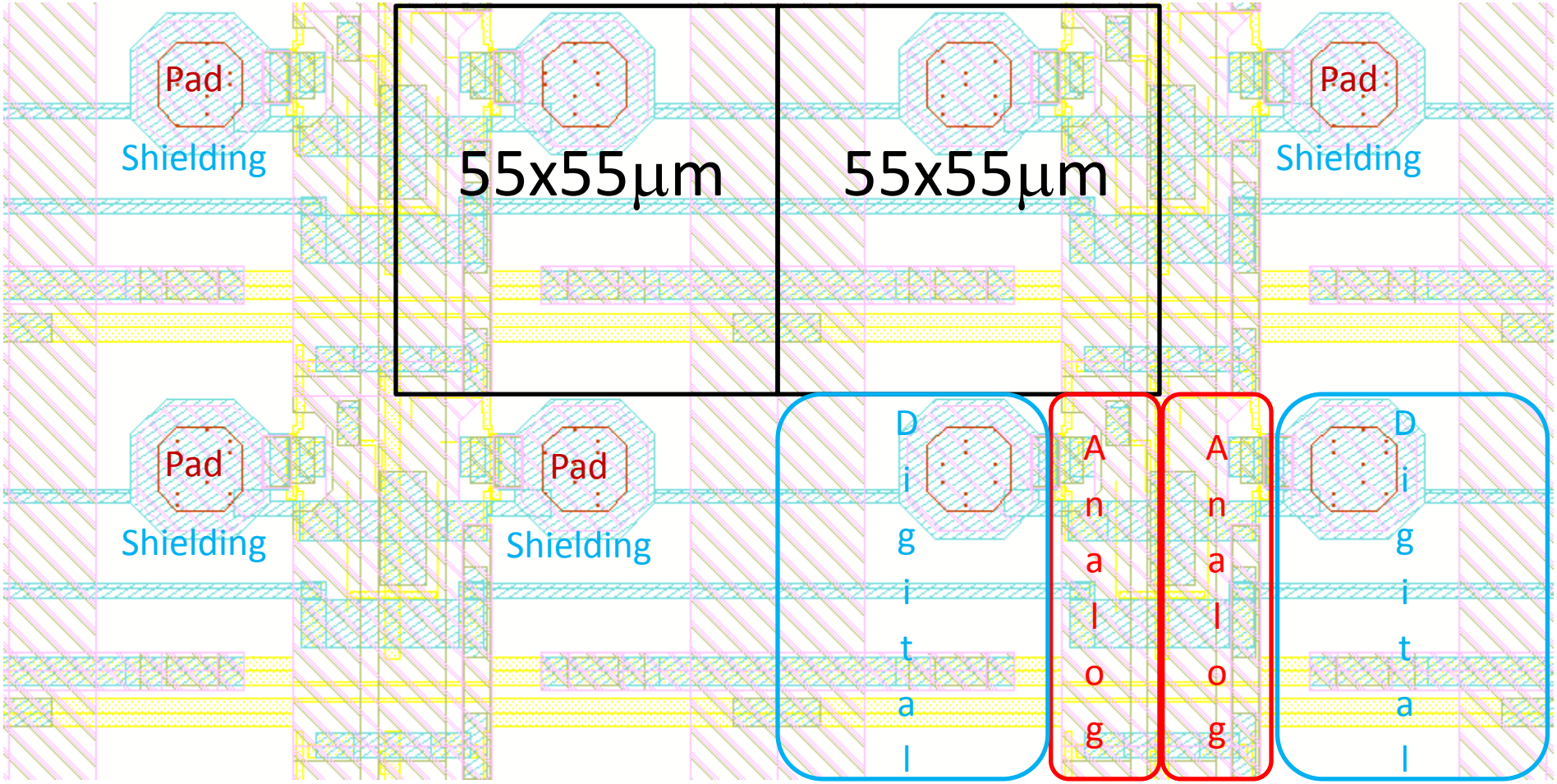

Studies and simulations have been carried out to quantify and minimize the noise injection into the sensitive analog nodes.

Timepix3: digital

- Digital pixels organized in double columns and superpixels 2x4 to optimize bandwidth.
- Simultaneous ToA & TOT measurement:
  - 10bit TOT@40MHz with pseudo-random encoding.
  - 14bit ToA@40MHz with Gray encoding.
- Photon Counting and integral TOT mode available:
  - 10bit PC with pseudo-random encoding.
  - 14bit iTOT with pseudo-random encoding.
- Using the VCOs→ additional 4bit fine ToA@640MHz with binary encoding.
- 16 output phases of the PLL → delay clocks to the double columns in a staggered fashion.
- Packet-based readout with pixels active during readout: small readout associated dead-time of 375ns (for pixel data transfer into the SuperPixel)

  → Maximum dead-time free hit rate: 40Mhits/s /cm² (expected for randomly distributed hits).
- More information in these posters:
  - "Digital Column Readout Architectures for Hybrid Pixel Detector Readout Chips" by Tuomas Sakari Poikela.
  - "The Charge Pump PLL Clock Generator Designed for the 1.56 ns Bin Size Time-to-Digital Converter Pixel Array of Timepix3 Readout Chip" by Yunan Fu.

Timepix3: readout modes

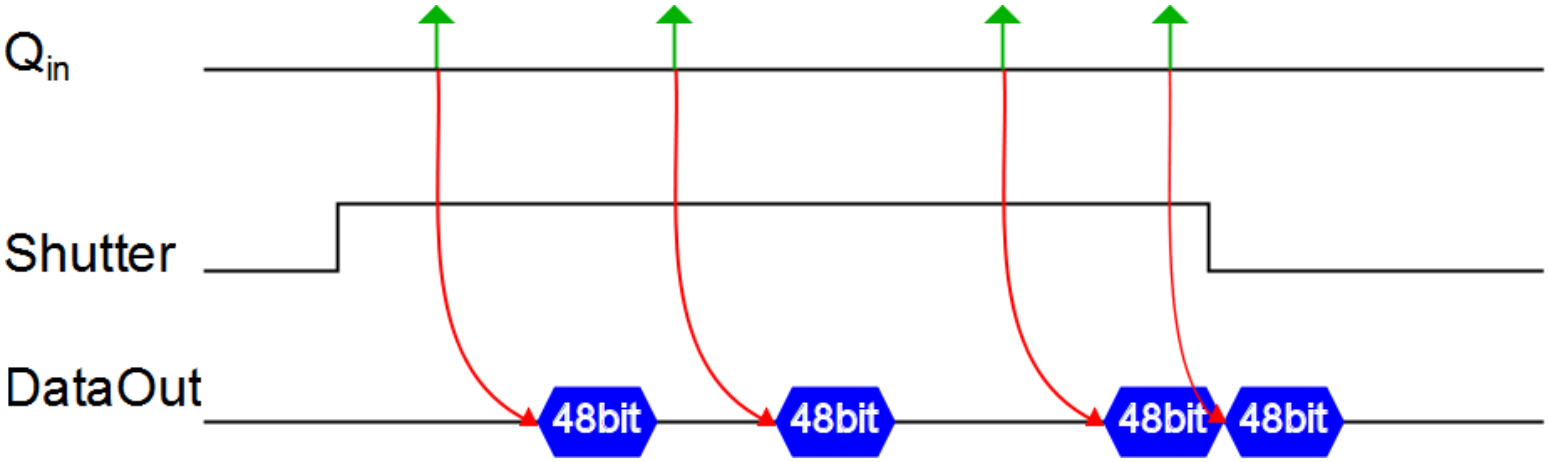

Data-driven readout mode.

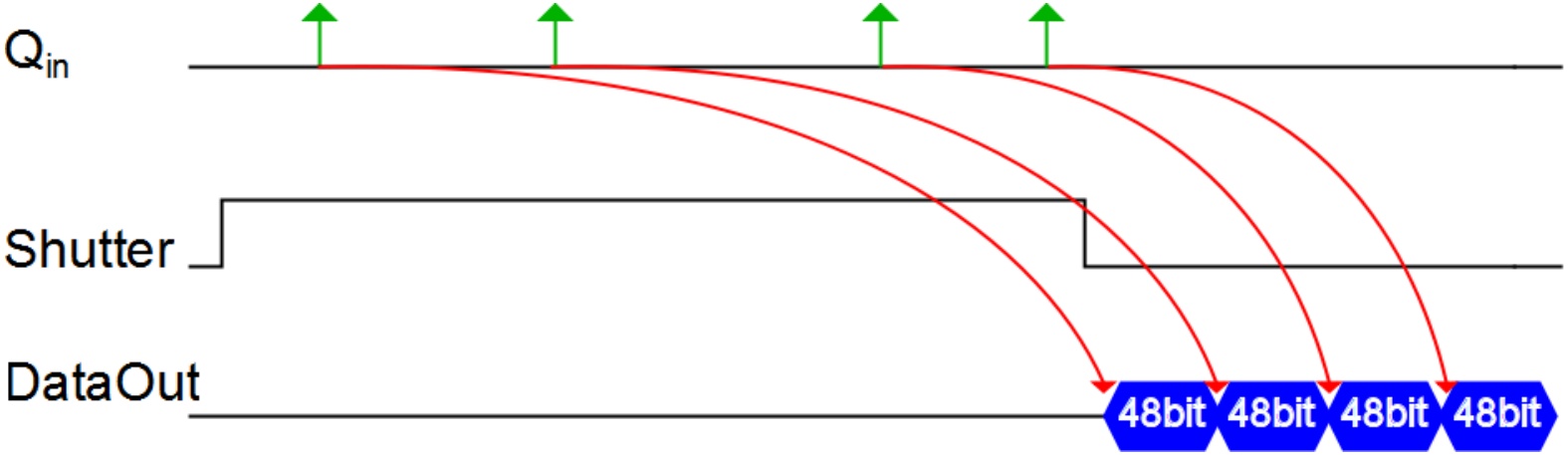

Sequential Read/Write mode.

Simulation with 1.7ke$^-$ pulses

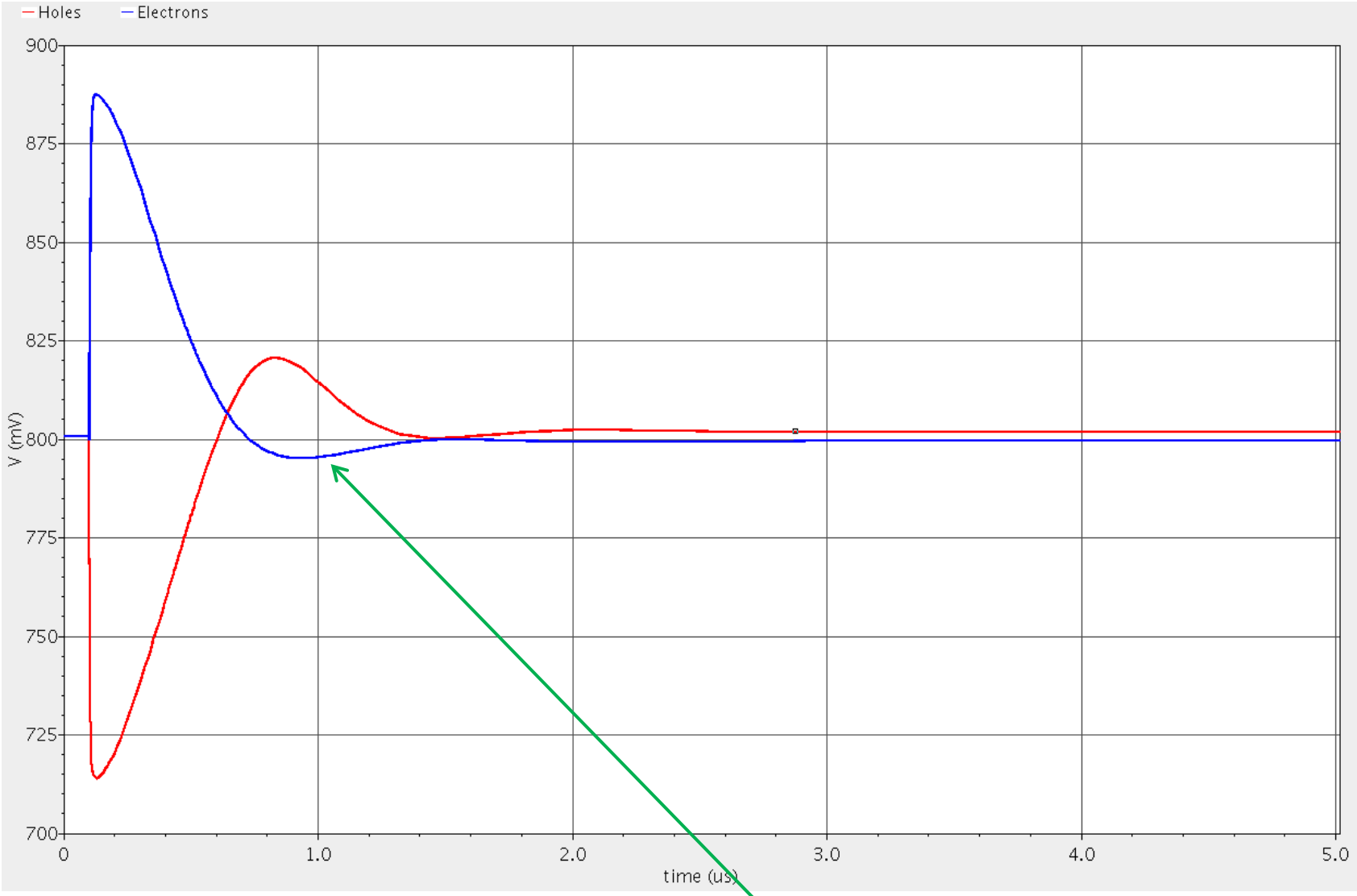

In simulation, we appreciate the different undershoots for electrons or holes.

Uncalibrated baselines (DAC code 0xF)

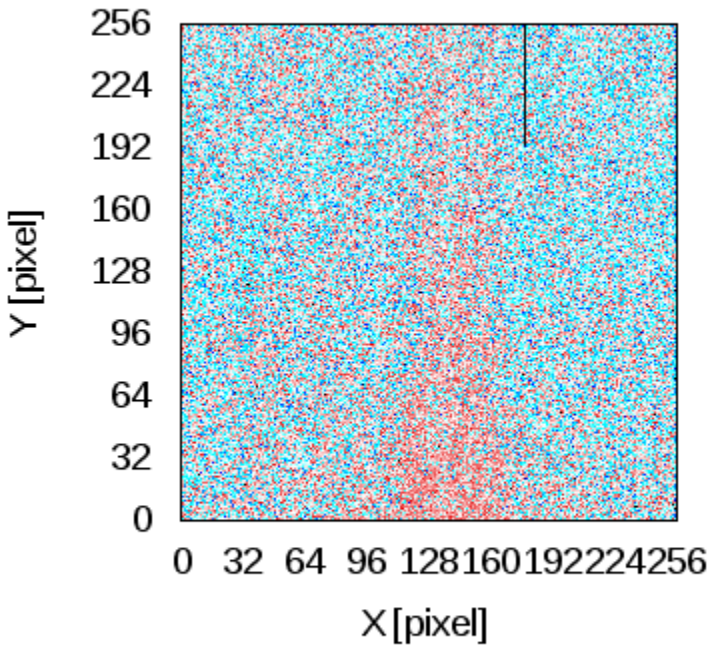

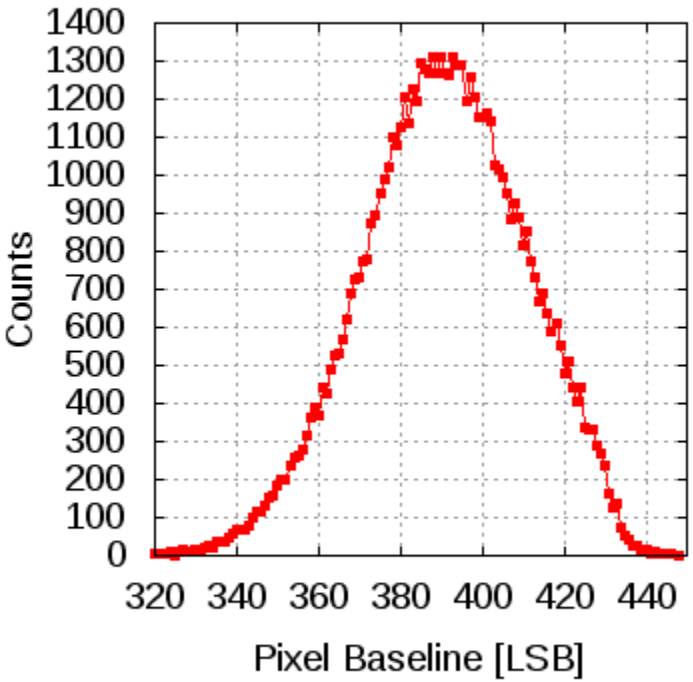

Pixel-to-pixel baseline mismatch: 178e$^-$ rms.
In simulation it was 160e$^-$, but we know that for some components (compensation capacitors, gate-around transistors) the mismatch models are optimistic.

Overlapping all S-curves

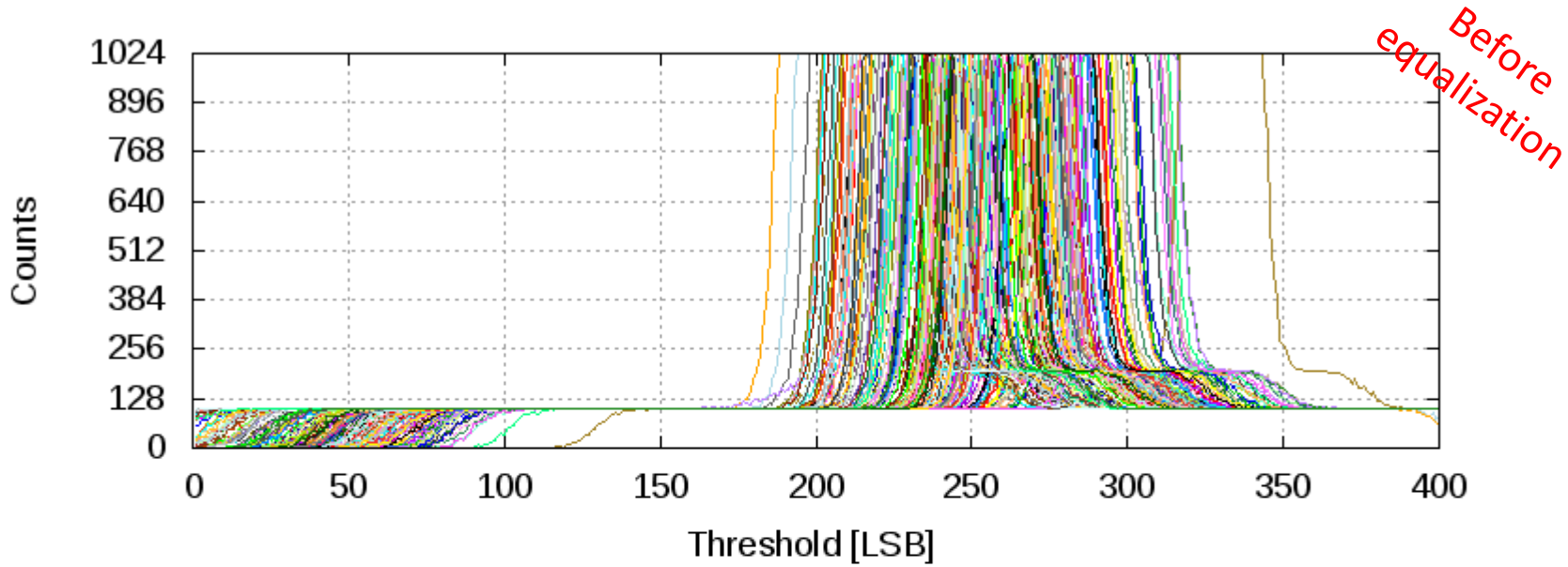

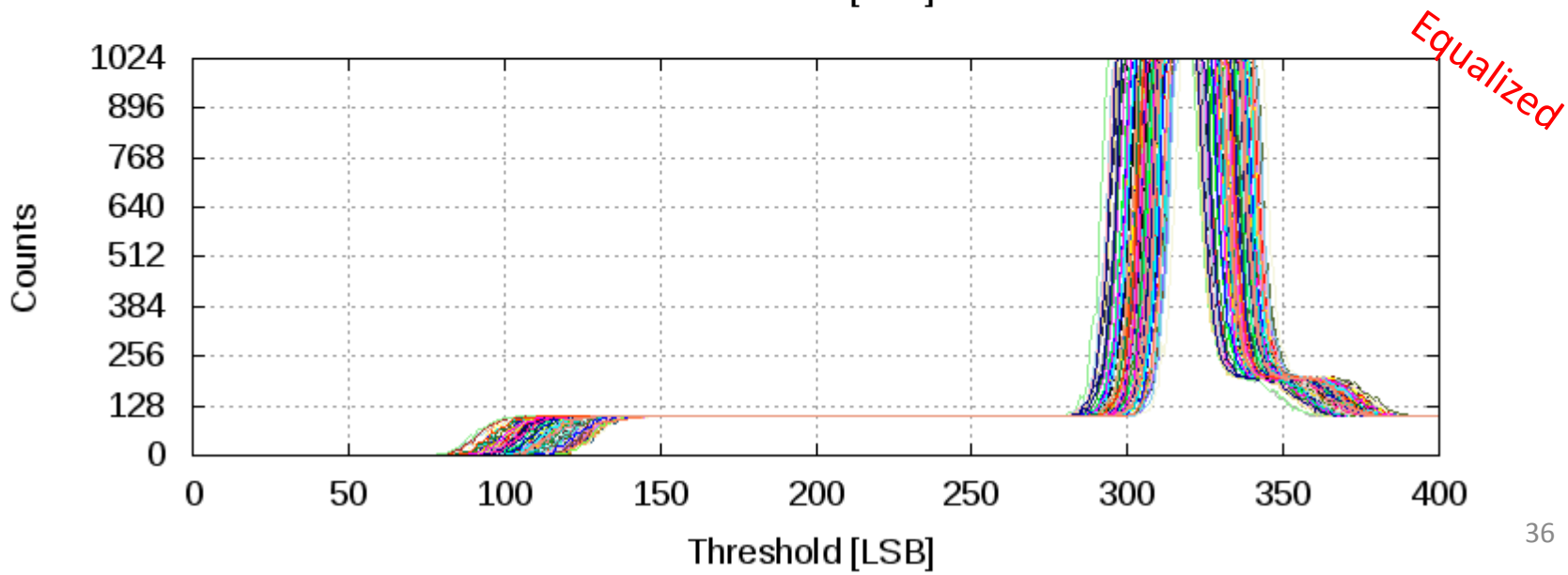

Smallpix tentative floorplan 448x448

Readout cells:
448x38um=
17.024mm

Distributed periphery:
7x256um= 1.792mm

Total height:
18.816mm