VTRx/VTTx
Status and production plan

Versatile Link

Jan Troska

Stéphane Détraz, Lauri Olanterä, Csaba Soos,
Sarah Storey, Christophe Sigaud, François Vasey

Versatile Link Overview

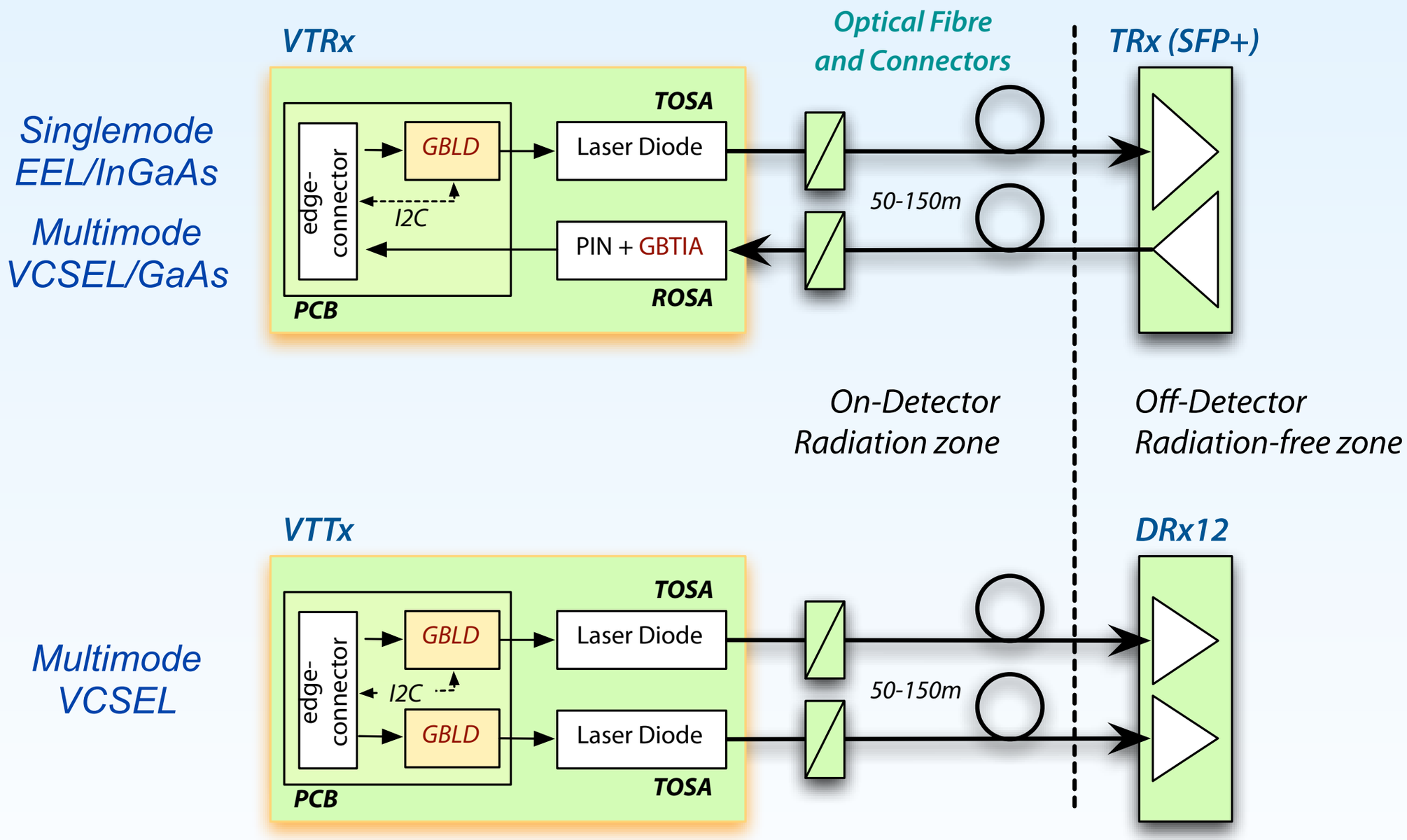

Design Status

Variant	Laser Driver	TOSA	ROSA	Picture
Single-mode VTRx	GBLD v4.1	Edge Emitter Laser	InGaAs GBTIA v2	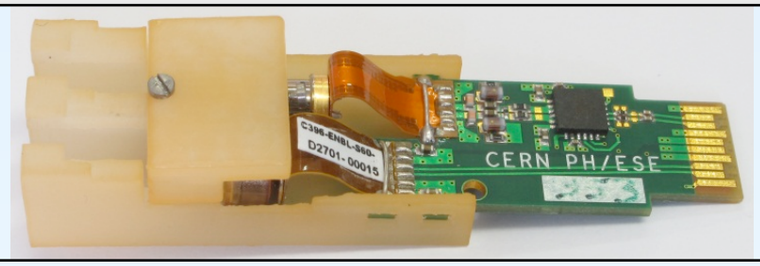
Multi-mode VTRx	GBLD v4.1	850 nm VCSEL	GaAs GBTIA v2	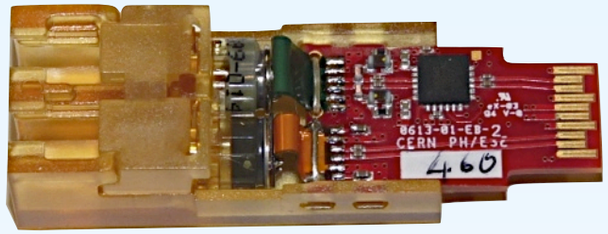
Multi-mode VTTx	GBLD v4.1	850 nm VCSEL	-	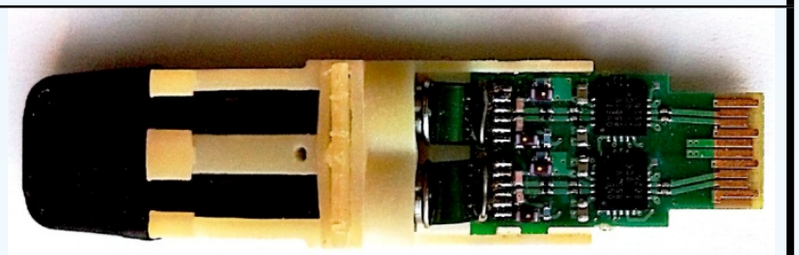
Rad-soft VTTx	ONET8501V	850 nm VCSEL		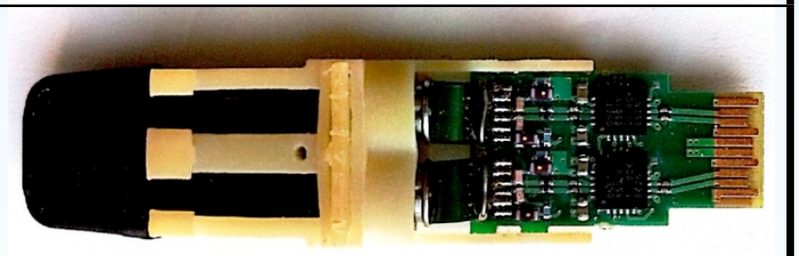

- Performance demonstrated at TWEPP 2012
- Final circuit board layout now complete
- Prototypes available

Comparison to an SFP

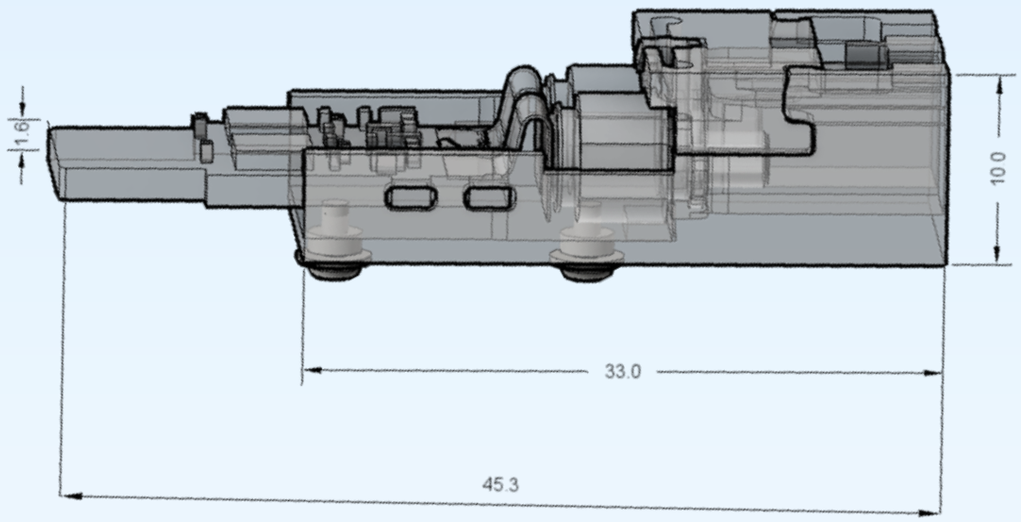

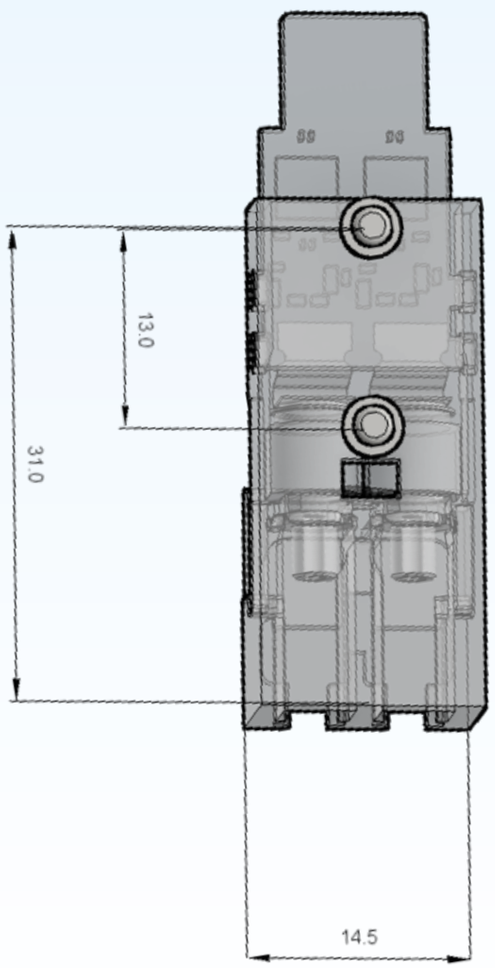

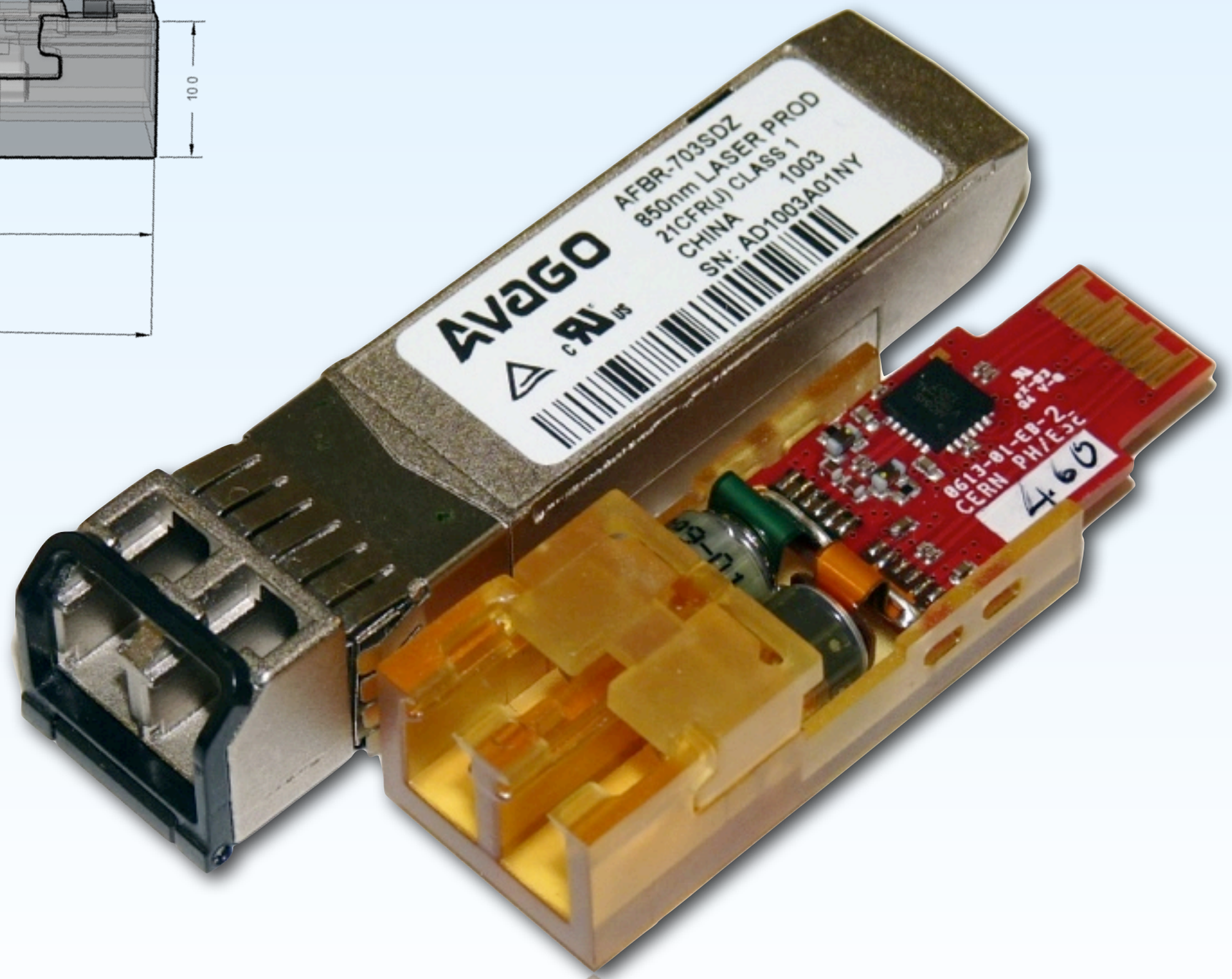

Latch

- MM latch design (VTRx & VTTx) complete
- To be produced by injection moulding by PEP Ltd, UK
  - Ultem 1000 material (rad hard)
- First prototypes being evaluated these days
  - Functionality proven
  - Metrology ongoing

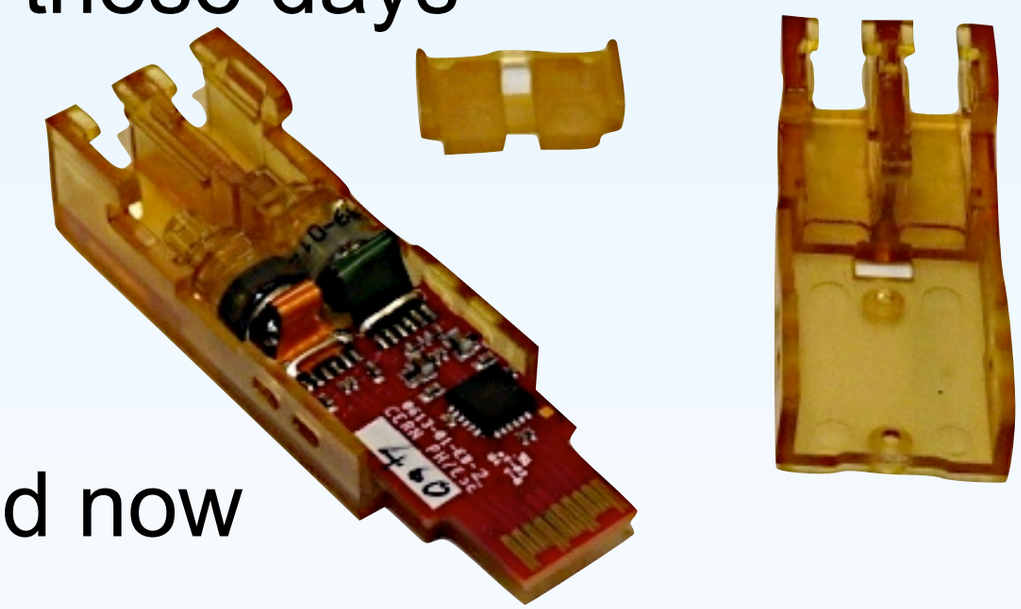

- SM latch design being prototyped now
  - CERN rapid prototyping facility
- Production method TBD

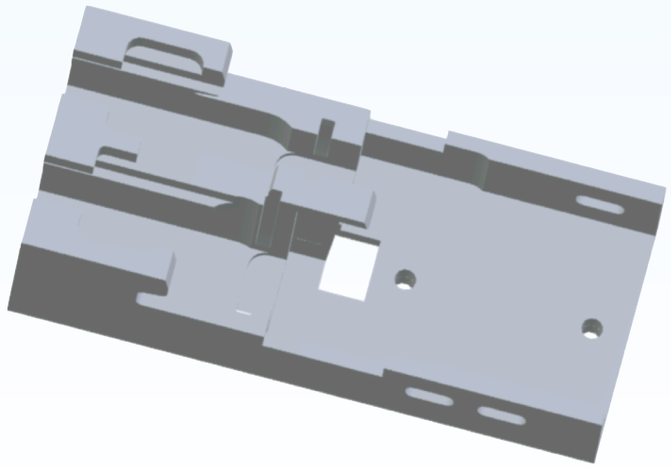

Performance: MM VTRx GBTIA v.2

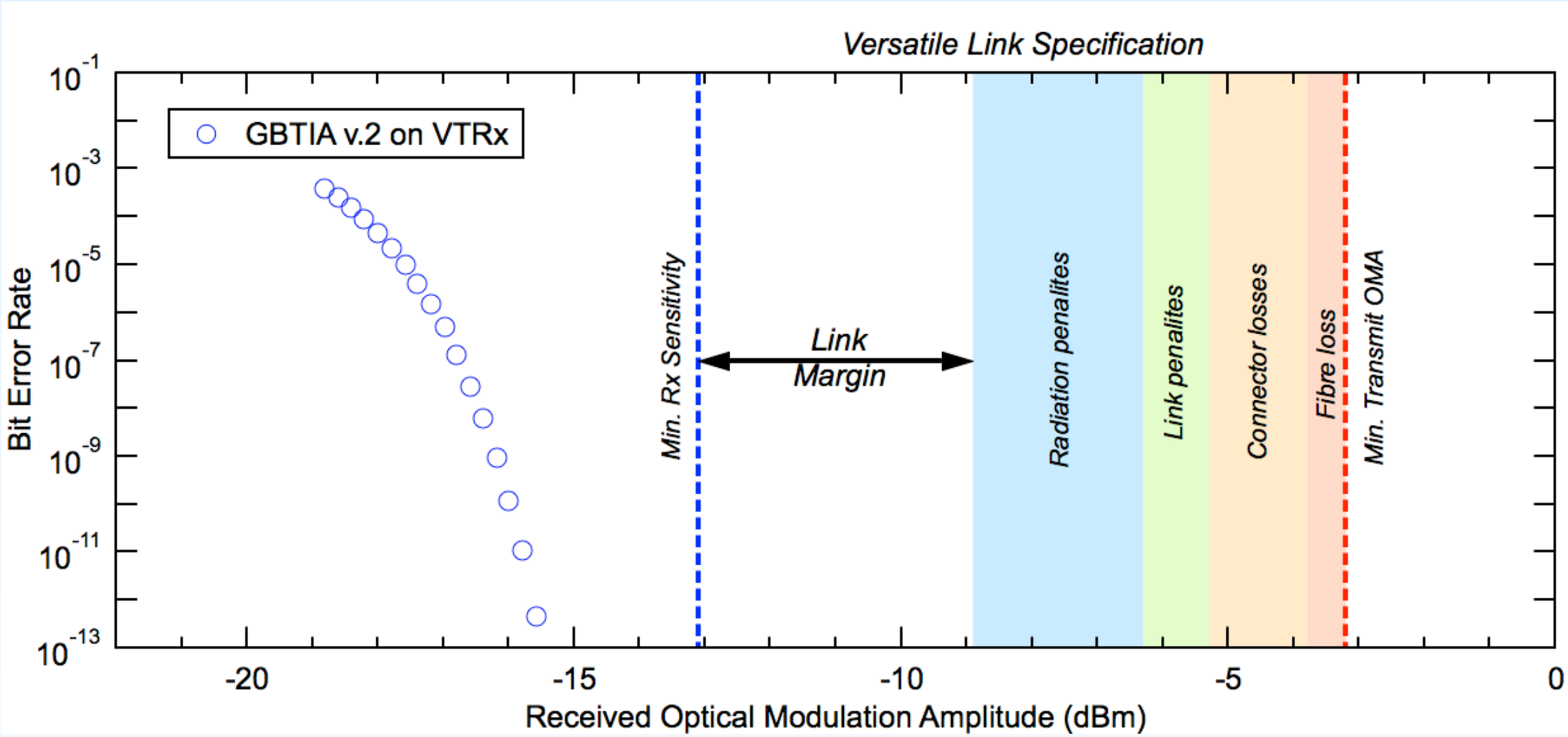

- Very good Rx performance
  - 2nd source identified
- Specifications easily met

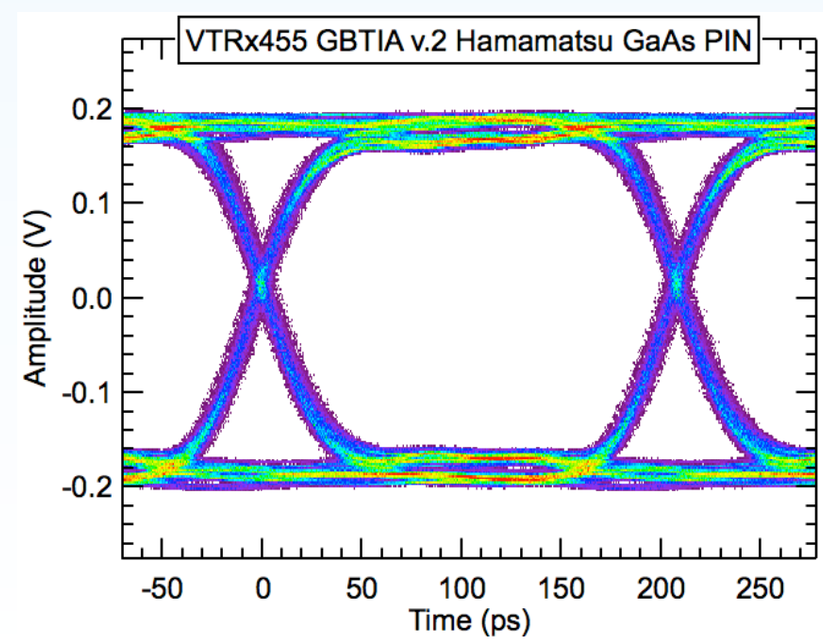

GBLD performance

- Verified performance of GBLD v4.1 to operate over specified operating temperature range.

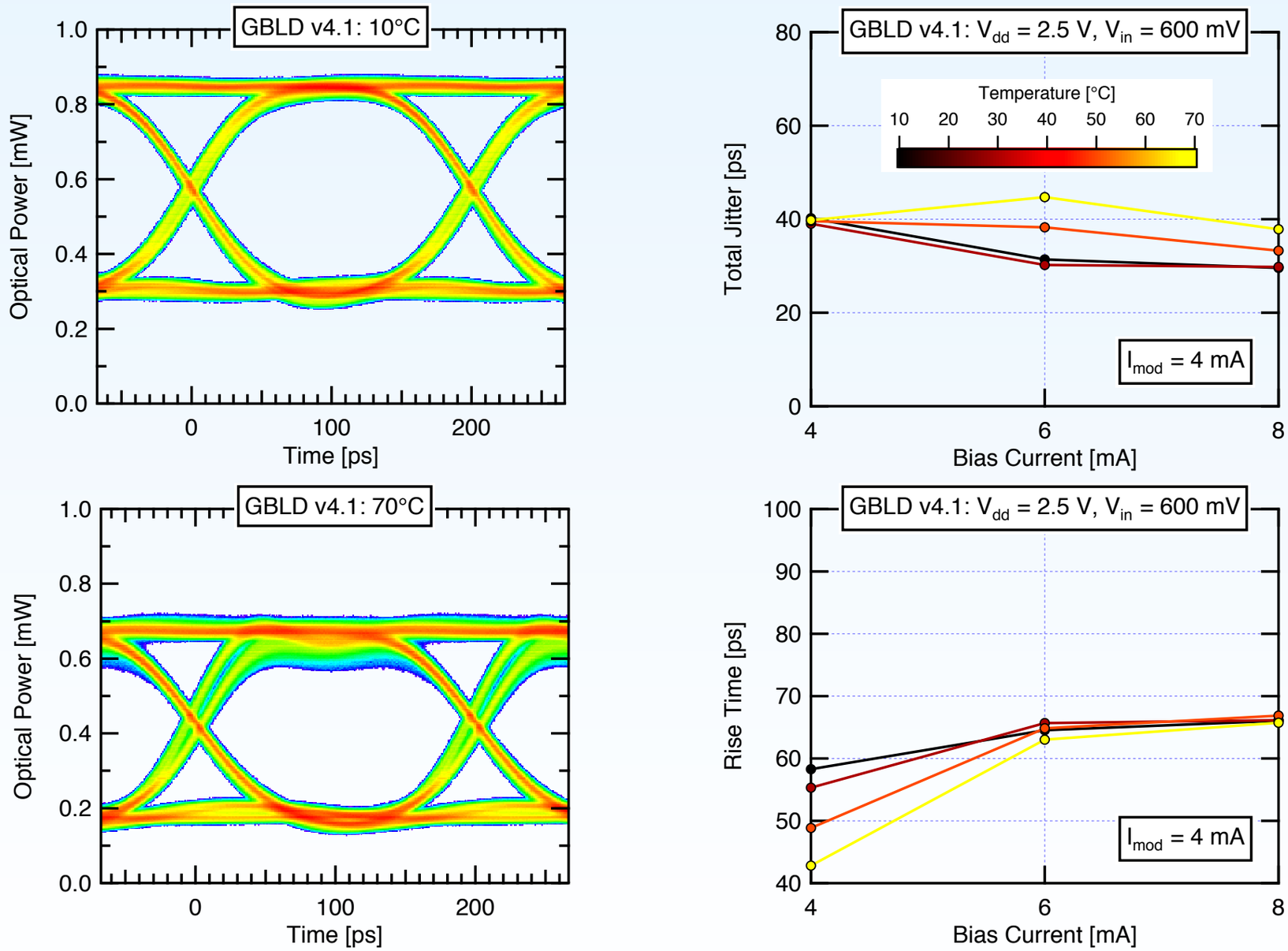

Versatile Link Procurement

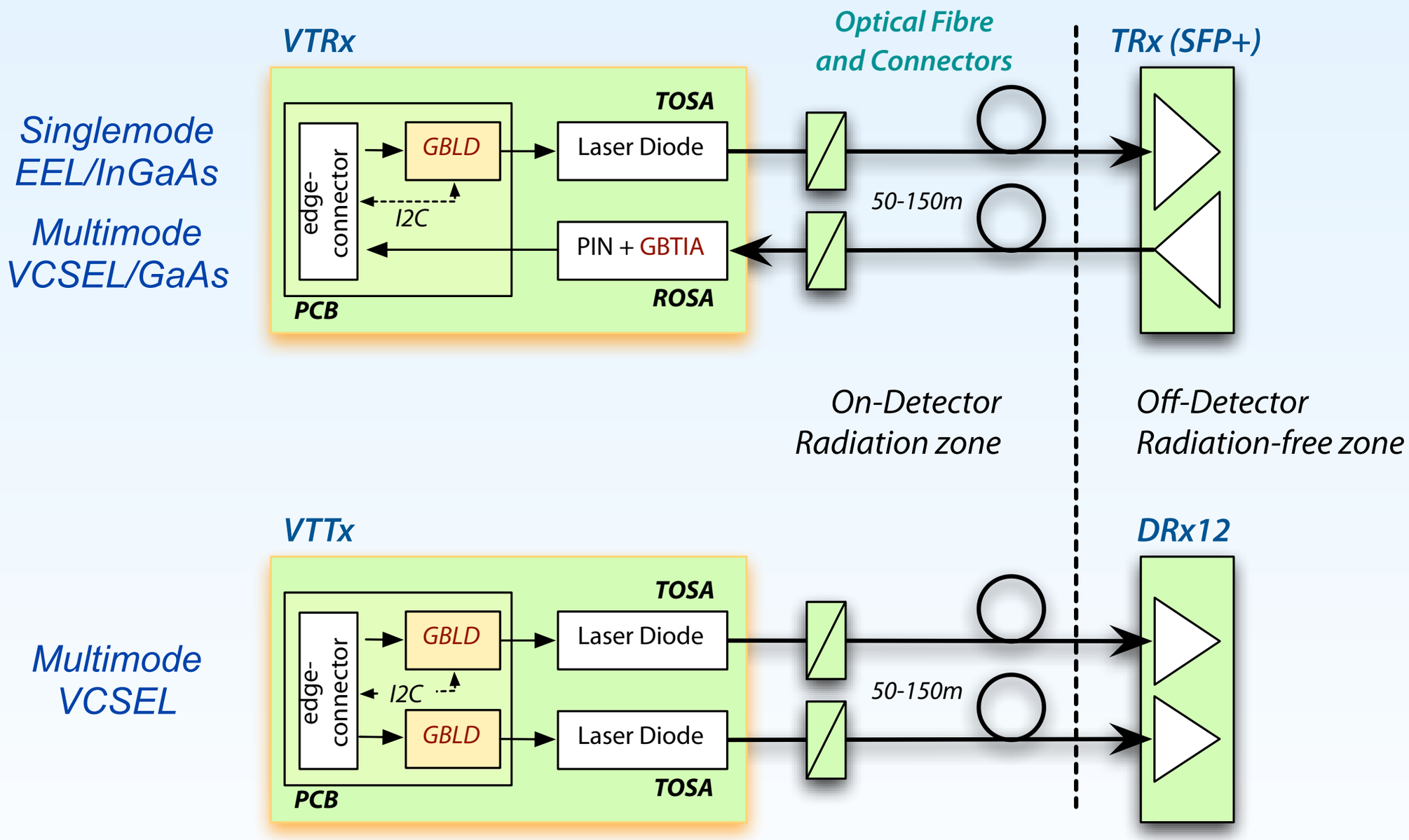

Procurement by CERN on behalf of users

Procurement by users

Procurement quantities

Radn Grade	TOSA		ROSA		Latch		VTRx		VTTx
& User	SM	MM	SM	MM	SM	MM	SM	MM	MM
Cal LHCb		16900		2900		9900		2900	7000
Cal HCAL	200	4400	200	400	200	2400	200	400	2000
Tk PIXph1	3000								
Cal ATLAS SmWh		1850		650		1250		650	600
Cal ATLAS LArg		150		150		150		150	
Totals	3200	23300	200	4100	200	13700	200	4100	9600
	Complete	*MS ongoing*			*Pre-Prod Eval.*				

- Pledges so far
  - ALICE is now also showing interest, likely to represent a large (30-50%) extra number of links
- We procure on your behalf
  - Need funding for parts as well as final modules
  - Need to take funding profiles into account?

Summary

- Feasibility of Versatile transmitter and transceiver modules proven
  - Functional and environmental testing
  - Final ASIC versions available and ready for production
- Prototypes are with users
  - CMS HCAL, LHCb
  - More prototypes for distribution are available
- Procurement process defined and started