High speed readout electronics development for frequency-multiplexed kinetic inductance detector design optimization.

O. Bourrion C. Vescovi A. D'Addabbo N. Boudou M. Calvo
M. Catalano J. Goupy J.F. Macias-Perez A. Monfardini

CNRS-IN2P3-LPSC Grenoble

Sept 24th, 2013

Table of Contents

Table of Contents

Microwave Kinetic Inductance Detectors and their usage

- Superconducting detectors: operated $< 300\,mK$
- Sensitive to photons and ballistics phonons
- Coupling the kinetic inductance to a capacitor yields a resonator $\rightarrow$ frequency readout
- Is constructed by photo-lithography
- High integration can be achieved easily

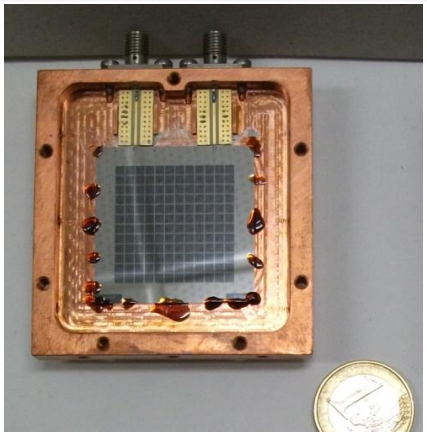

144 pixels array

Applications:

- **Photon** mediated detection: detector for mm-wavelength astronomy, X-rays, ...
- **Phonon** mediated detection:
  - Particle detector (cosmic-ray, dark matter detection, ...)
  - Tool for characterizing phonon propagation in various materials

Our goal:

Optimize MKID arrays for space-borne astronomy by making them insensitive to cosmic-rays.

Imaging by phonon sensor

- Signal induced by direct cosmic ray interaction with MKIDs is very low (metal layer very thin <20 nm, filling factor < 1%)
- High energy particle interaction in the substrate is detected and localized by the **time-resolved detection** of the ballistic phonons produced

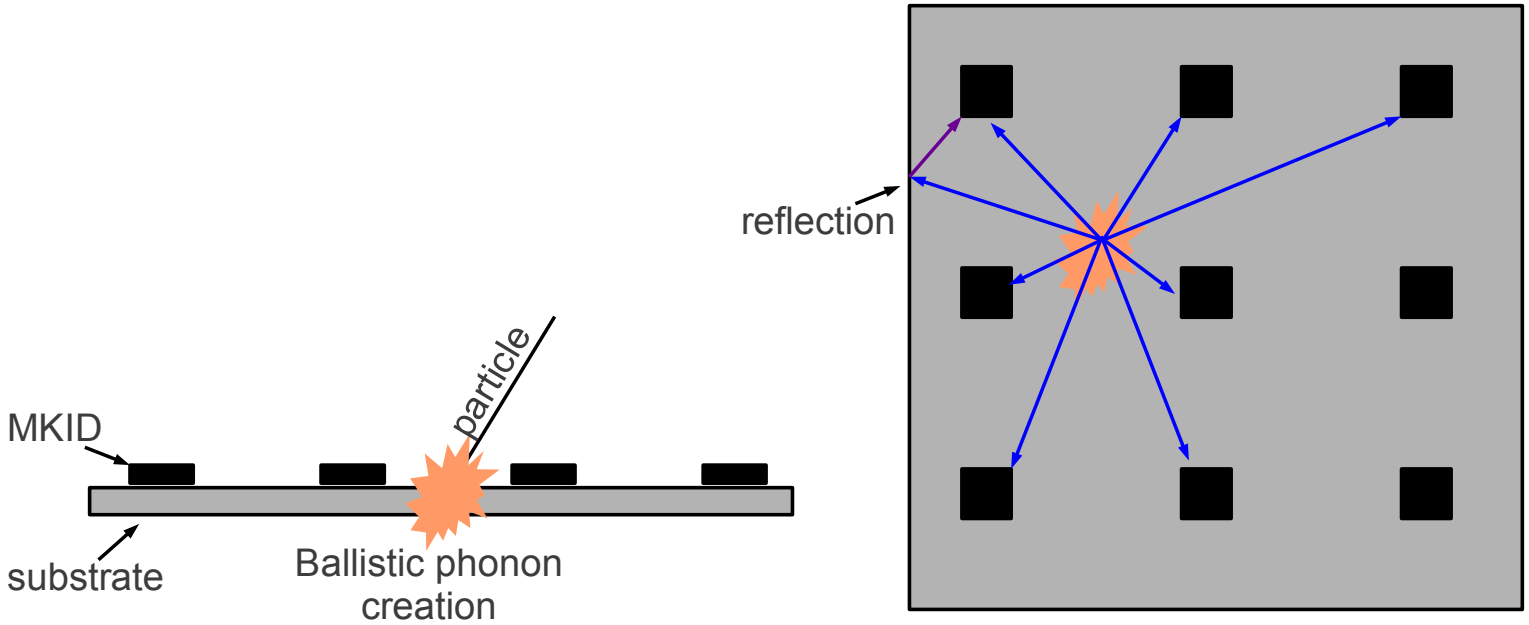

- Direct and reflected phonons can be detected
  ⇒ High speed readout is required for precise time measurement

Table of Contents

MKID readout principle

- MKIDs array → transmission line with n high quality factor resonators Q (10^5)
  - Each resonator has a different self resonant frequency (**average** frequency separation is application dependent)
  - Resonance frequencies lies in the GHz range.

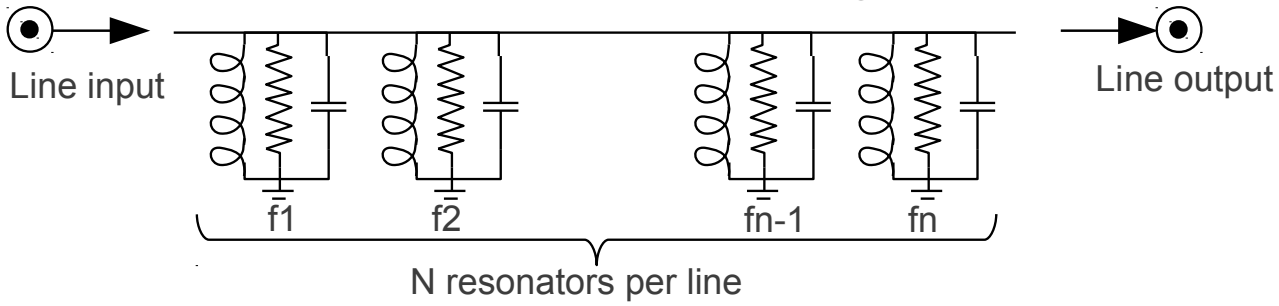

- Detection principle → shift of the resonator self resonant frequency when illuminated or with phonon interaction.
- Constraints:
  - Array at very low temperature (cryostat below 300 mK)
    ⇒ Cable feedthrough must be kept to a minimum
  - Work in RF domain

Array instrumentation method (1/3)

1. Excitation: generation of a frequency comb (frequency multiplexing):
   - Containing the largest possible number of frequencies
   - Each frequency adjustable at a kHz resolution.
   - Each tone generated in the **I**n-phase and **Q**uadrature version
2. Up-conversion of the baseband generated frequency comb
3. The signal passes through the array and is eventually modified
4. At the array's output, down-conversion to baseband
5. Signal processing: determine each tone amplitude and phase

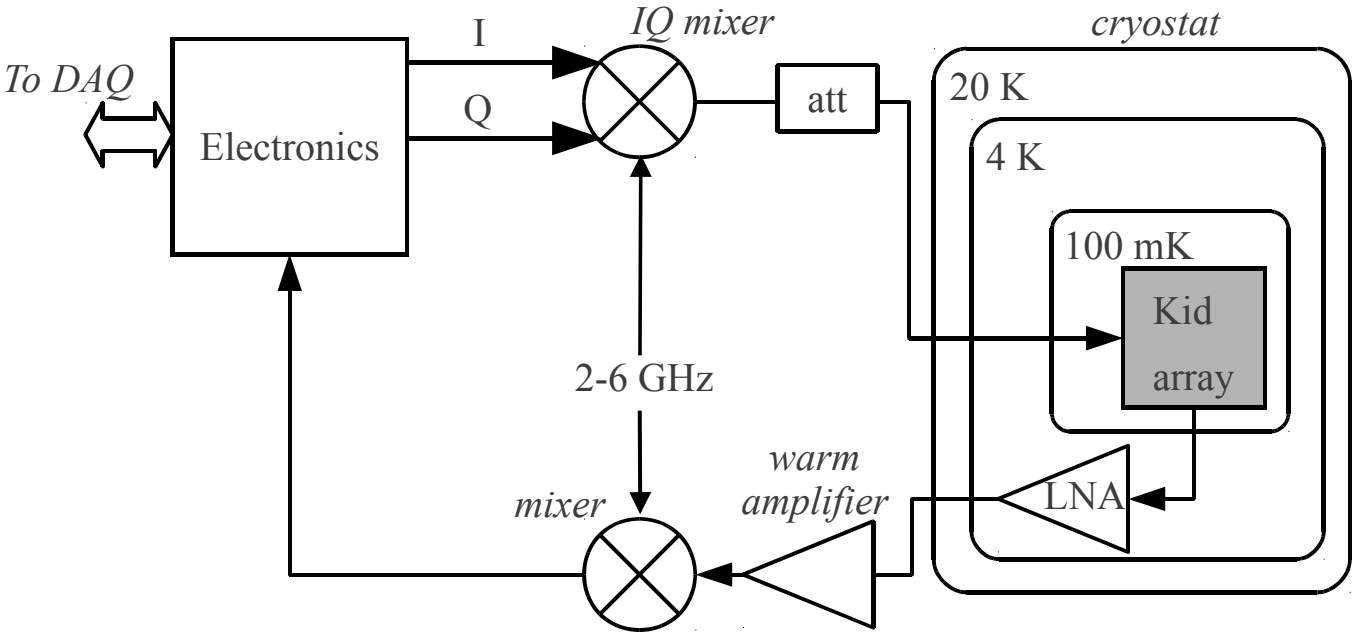

Array instrumentation method (2/3)

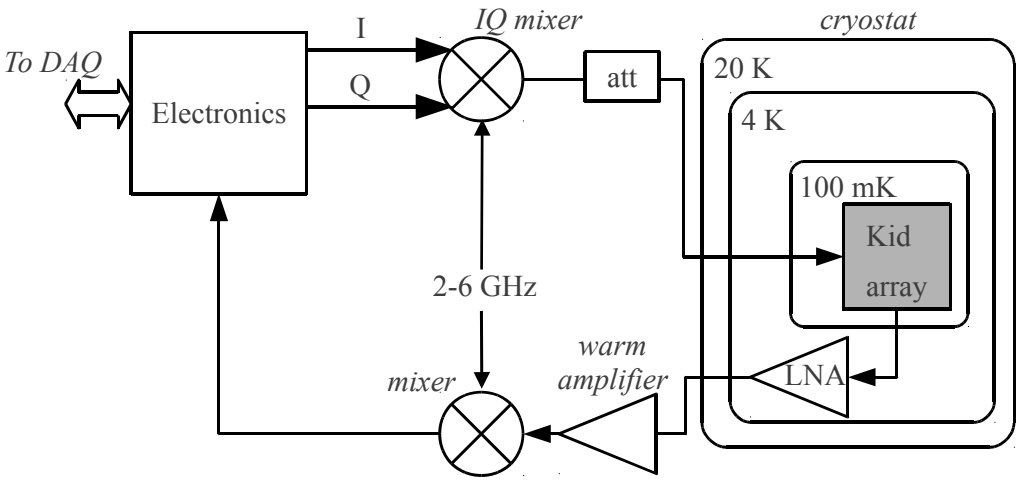

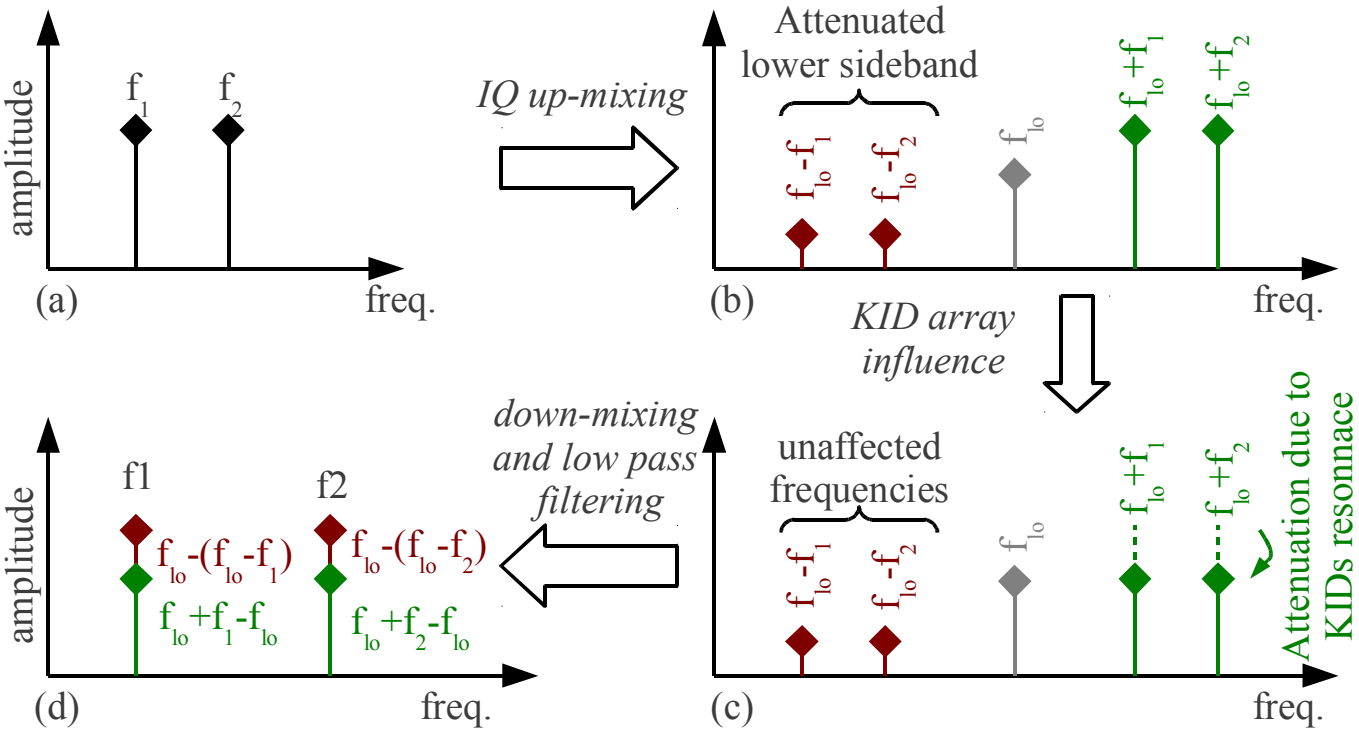

Array instrumentation method (3/3)

1. Sine and cosine waves generated by CORDIC (COordinate Rotation DIgital Computer)
   - Using only adder/subtracters and a precomputed arc tangent table
   - Algorithm easy to "pipeline"
   - Can reach sine and cosine resolution of $1/2^{n-1}$, where n is the number of +/- stages and atan constants
2. Line output signal analyzed by Digital Down Conversion (DDC) ⇒As many DDC processors as MKID to monitor

- Low pass filter design is application dependent
- For $\mathrm{A} \times \sin(\omega t + \phi) \Rightarrow |\mathrm{A}| = \sqrt{\mathrm{I}^2 + \mathrm{Q}^2}$ and $\phi = \arctan \frac{\mathrm{Q}}{\mathrm{I}}$

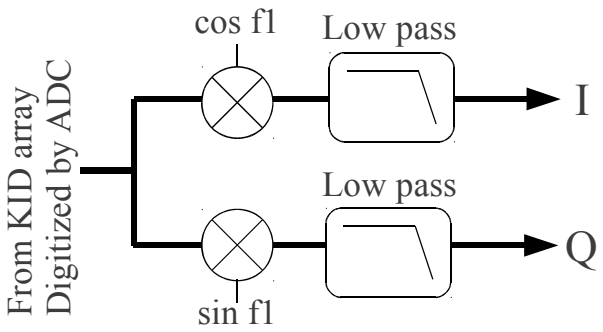

Table of Contents

Requirements

1. **Achieve an acquisition rate of 2 MSPS**, to cope with:
   - Phonons propagation speed, about mm/µs
   - KID signal typical rise time, at 2 GHz with Q=10^4 is a few µs
2. **Read-out an array of at least 3×3 MKIDs**:
   - for time-resolved 2D detection

   $\Rightarrow$ MKID resonance frequencies separated by a few MHz, required bandwidth above 50 MHz
3. **Use a triggered acquisition**:
   - to store useful events only

   $\Rightarrow$ On-line trigger on the module of the complex signal representation (I, Q)
4. **Acquire a data frame of up to 1000 samples**, with the possibility to get up to 500 samples prior to trigger:
   - for time-resolved detection and phonon reflexion discrimination
5. **Have a SNR better than $\sim$60 dB** (due to the best low noise cold amplifier noise followed by the readout gain of 60-65 dB)

Table of Contents

Electronic board overview

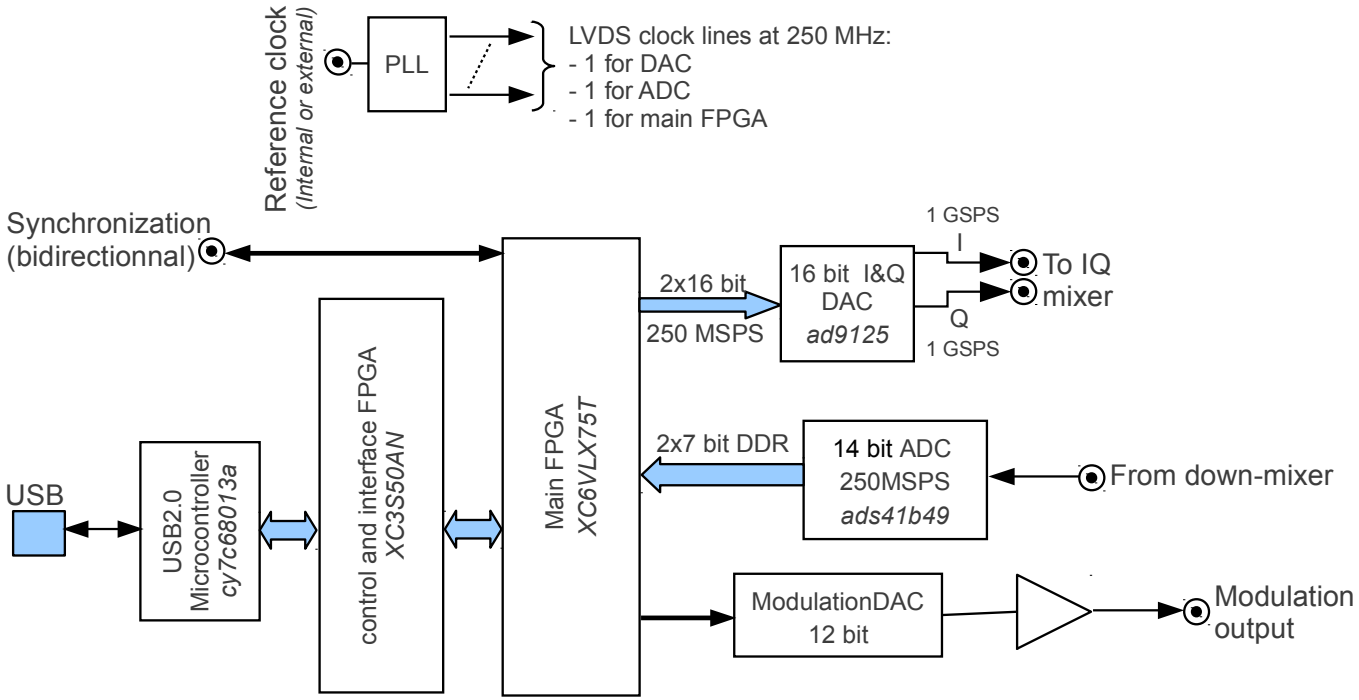

- Spartan 3AN for interfacing
- XC6VLX75T for processing (CORDIC+DDC)
- DAQ + slow control by USB
- Flexibility : FPGA configured par USB

- ADC sampling at 250 MSPS $\Rightarrow$ 125 MHz of bandwidth covered
- DAC input data rate 250 MSPS, analog samples output rate at 1 GSPS! Anti-aliasing analog filter constraint relaxed
- Multi-board synchronization possible with external reference clock and start signal
- Slow DAC for modulation control available (astronomy application)

Actual board and integration

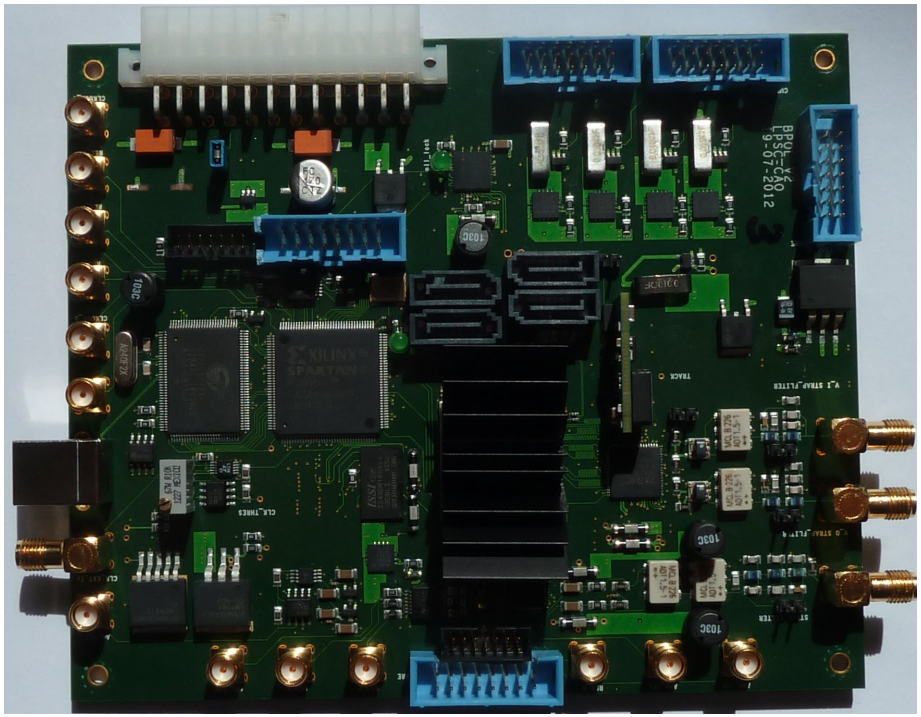

- Dimension
  $150\,\mathrm{mm} \times 125\,\mathrm{mm}$
- Supplied by PC bloc directly (ATX)
- Integrated in a 19“ rack with a computer

Table of Contents

The tone manager – building block –, one per MKID

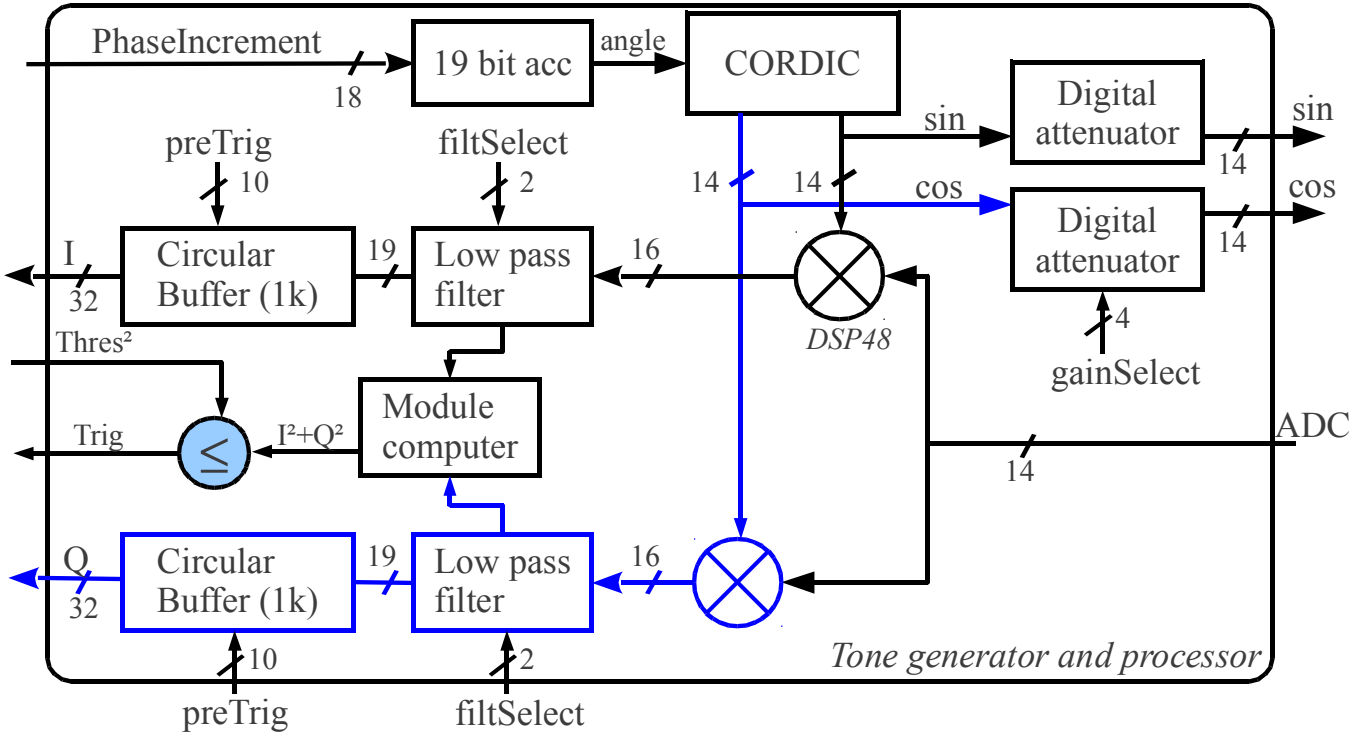

- 14 bit resolution CORDIC, individual tone attenuation (1/8th steps)
- Frequency bin resolution 953 Hz ($250\,\mathrm{MHz}/2^{18}$)
- Phase accumulator started with preset random phase
- Trigger on the square of signal amplitude
- Circular buffer for data delaying and hence pre-trigger tuning
- Possibility to choose between 3 sample rates

Low pass filter –architecture–

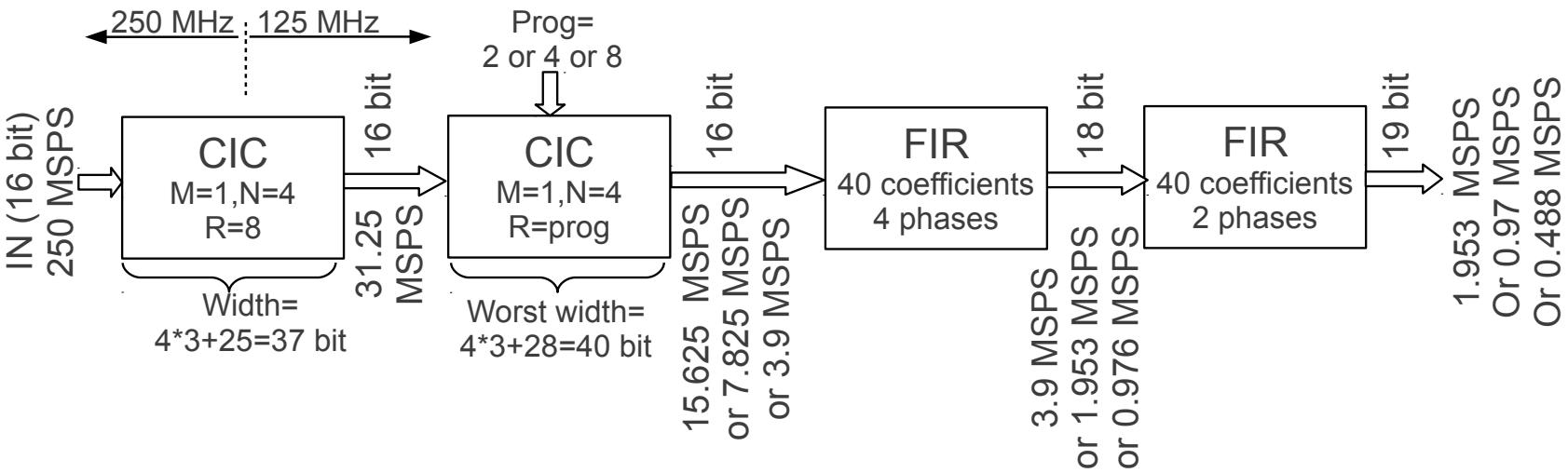

- Highly selective filter (to avoid crosstalk between MKIDs)
- Done in 4 stages (successive filtering and decimation)
- second stage decimation is adjustable $\rightarrow$ sampling rate tuning
- One DSP48 used per branch in the polyphase FIRs
  - $\Rightarrow$ 12 Tone manager can fit in the FPGA
- for one filter: $\sim$ 1494 flip-flops, 906 LUTs, 6 DSP48
- for 2×12 filters: 36k/93k flip-flops, 21k/46k LUTs, 144/288 DSP48

Low pass filter –performances–

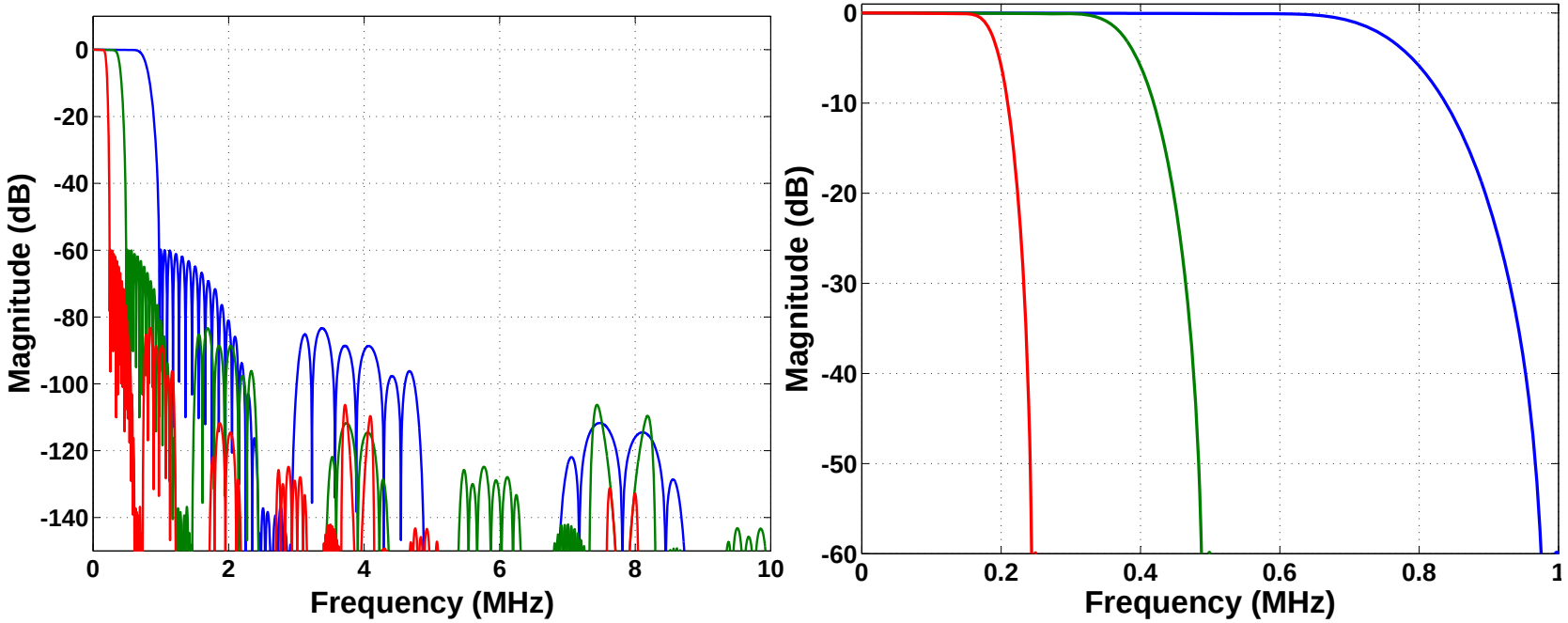

- Highly selective filters (500 kSPS, 1 MSPS, 2 MSPS)
  $\Rightarrow$ 60 dB gain drop in 200 kHz for the 2 MSPS filter
- No crosstalk between pixels (MKID) when sufficiently separated
- Remove white noise contribution to the signal $\rightarrow$ increase SNR

FPGA content overview

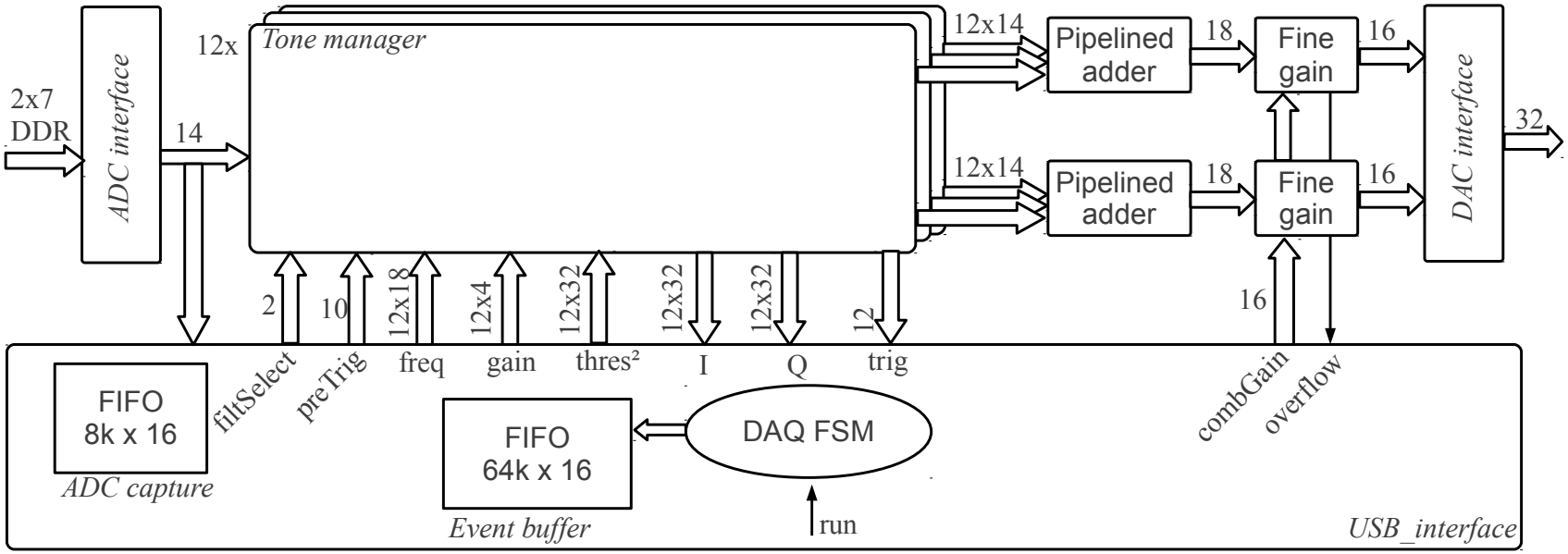

- ADC capture for noise measurement (8kS @250M)
- Digital summation of the sine waves
- Digital gain for the whole comb, steps of $1/2^{16}$. Full gain yields full scale for a single tone enabled (i.e x4). Overflow monitored
- Event buffer can fit 1365 samples max $(64k/((12 \times 2) \times 2))$
- Ressources used: 51k/93k FF, 38k/46k LUTs, 71/156 RAMB36, 156/288 DSP48

Table of Contents

Loop-back measurement – DAC + ADC noise –

- One of the DAC outputs connected to the ADC input.
- A single tone at 51 MHz generated with CORDIC: -12 dB from FS.
- 8k points FFT, comparable to constructor specification.

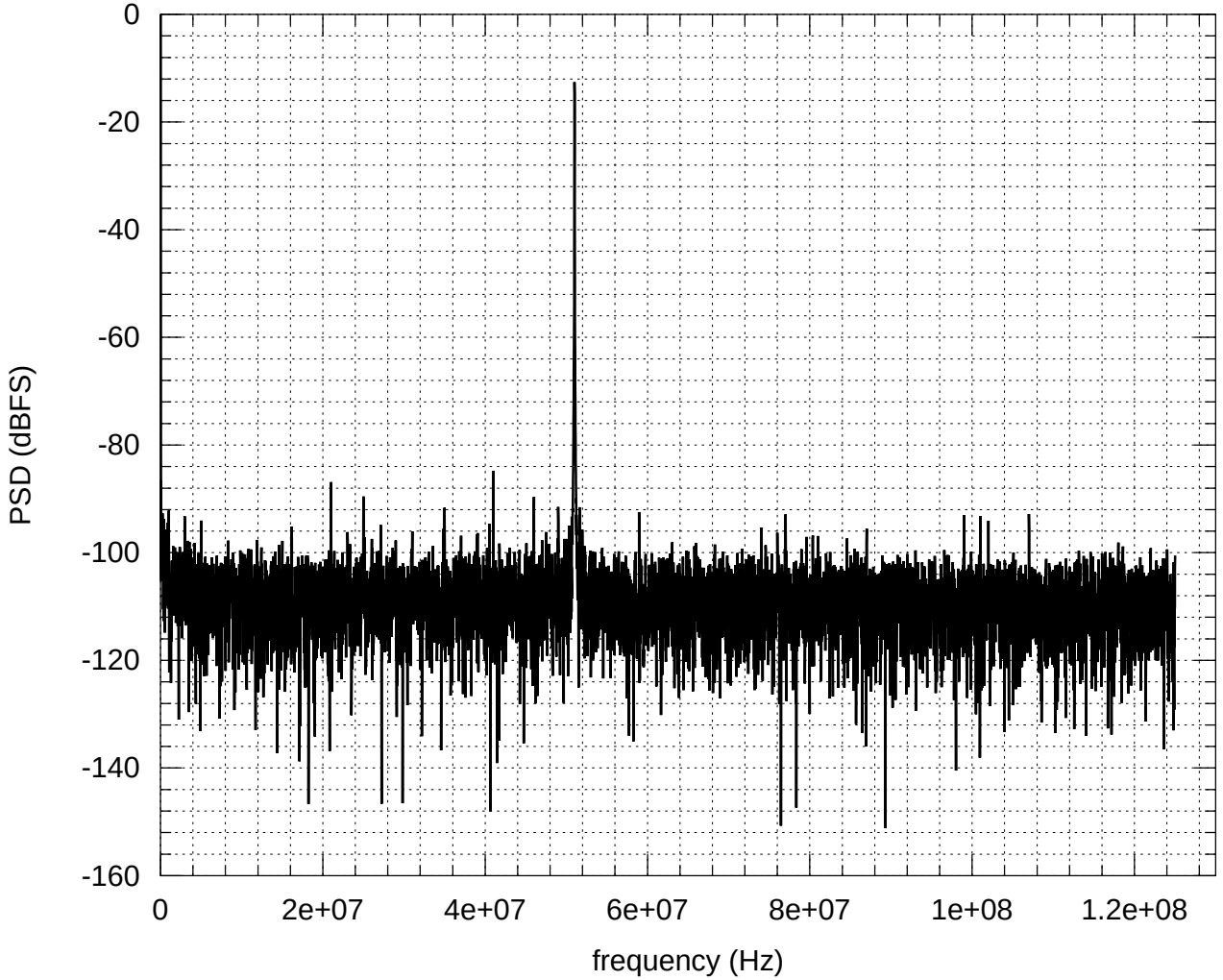

Loop-back measurement – Noise on DDC data –

- Same setup and signal as before. FFT of 1024 data: 2 MSPS case
- High noise rejection, (converted signal sits at 0 Hz)
- Multiples of 300 kHz due to DC/DC used for FPGA core supply.
- End of spectrum shows low pass filter turn on.

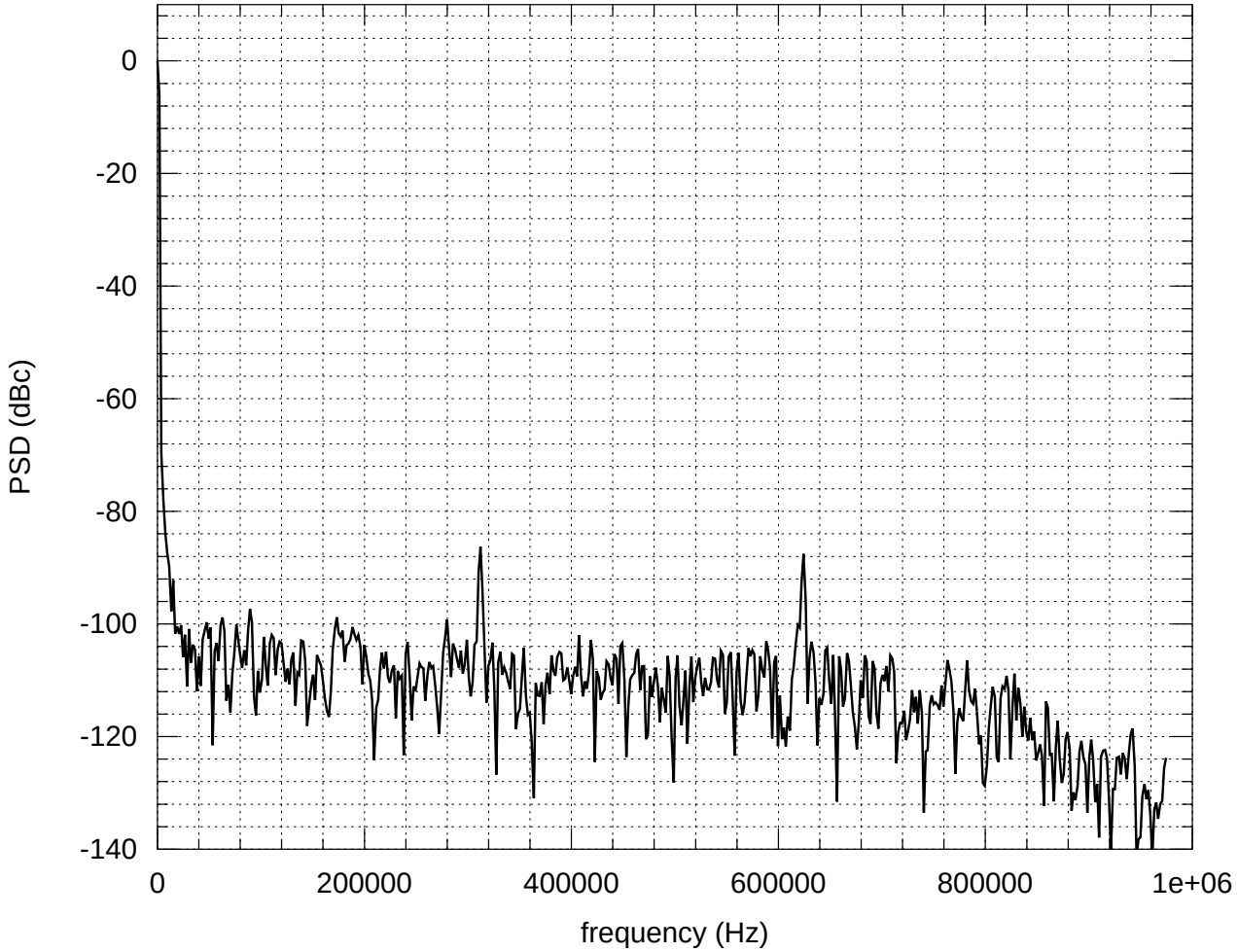

Sample measurement on an array

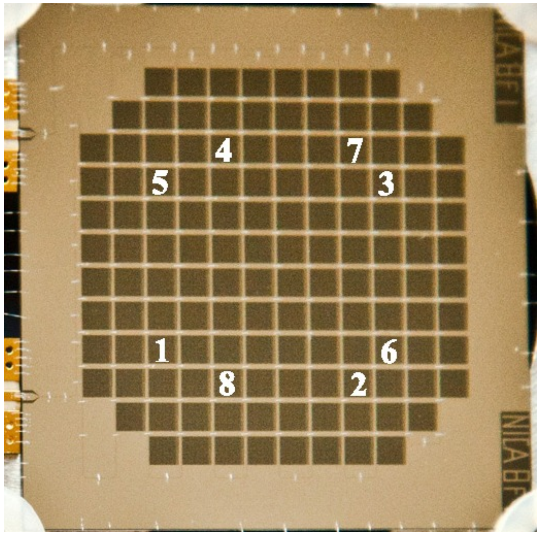

- Sampling at 2 MSPS, 600 samples
- Cosmic ray hit close to pixel 2 and 6
- Amplitude plots are with baseline removed
- Frequency variation show the real amount of signal measured.

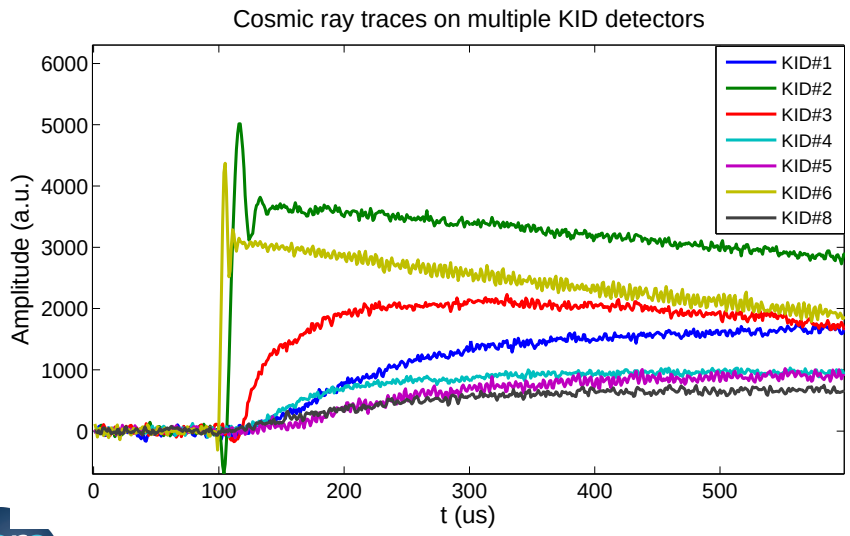

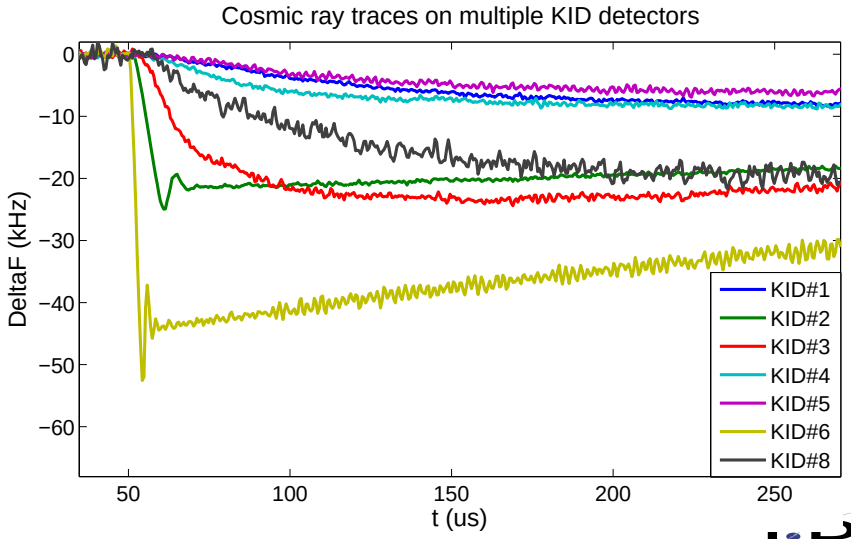

Table of Contents

Summary

- Fast readout of MKID pixel array can be achieved with dedicated electronics
- The limiting factors are:
  - DAC and ADC bandwidth, and hence FPGA speed: number of MKIDs for a given bandwidth
  - DDC low pass filter selectivity: need a lot of FPGA ressources but allows more MKIDs for a given bandwidth

- Powerful tool for investigation of cosmic rays interactions in KID arrays (SPACEKIDS collaboration). Ongoing.
- Potential application: 10-100 keV X-ray large field (10 cm) imaging. Future.
- Used in rare events R&D (e.g. double-beta decay, Roma university)