Arc circuits: warm and cold magnets

W. Venturini Delsolaro

with input from

L. Bottura, M. Casas Lino, M. Lamont,
N. Sammut, X. Panagiota, R. Schmidt,
M. Strzleczyk,

Outline

- Present status of the systems
- Plans for commissioning without beam
- Do we have all (the tools) we need?

Questions

- What will be the status of the systems at the end of HWC commissioning?
- **What needs to be done in order to be ready for beam?**
- When is this work done and who does it?
- How does the picture change in case of HWC and beam commissioning in parallel?
- Different scenarios (one or more sectors, 450 GeV, 7 TeV, or something in between…) = different machine checkouts?

PC, PIC and QPS

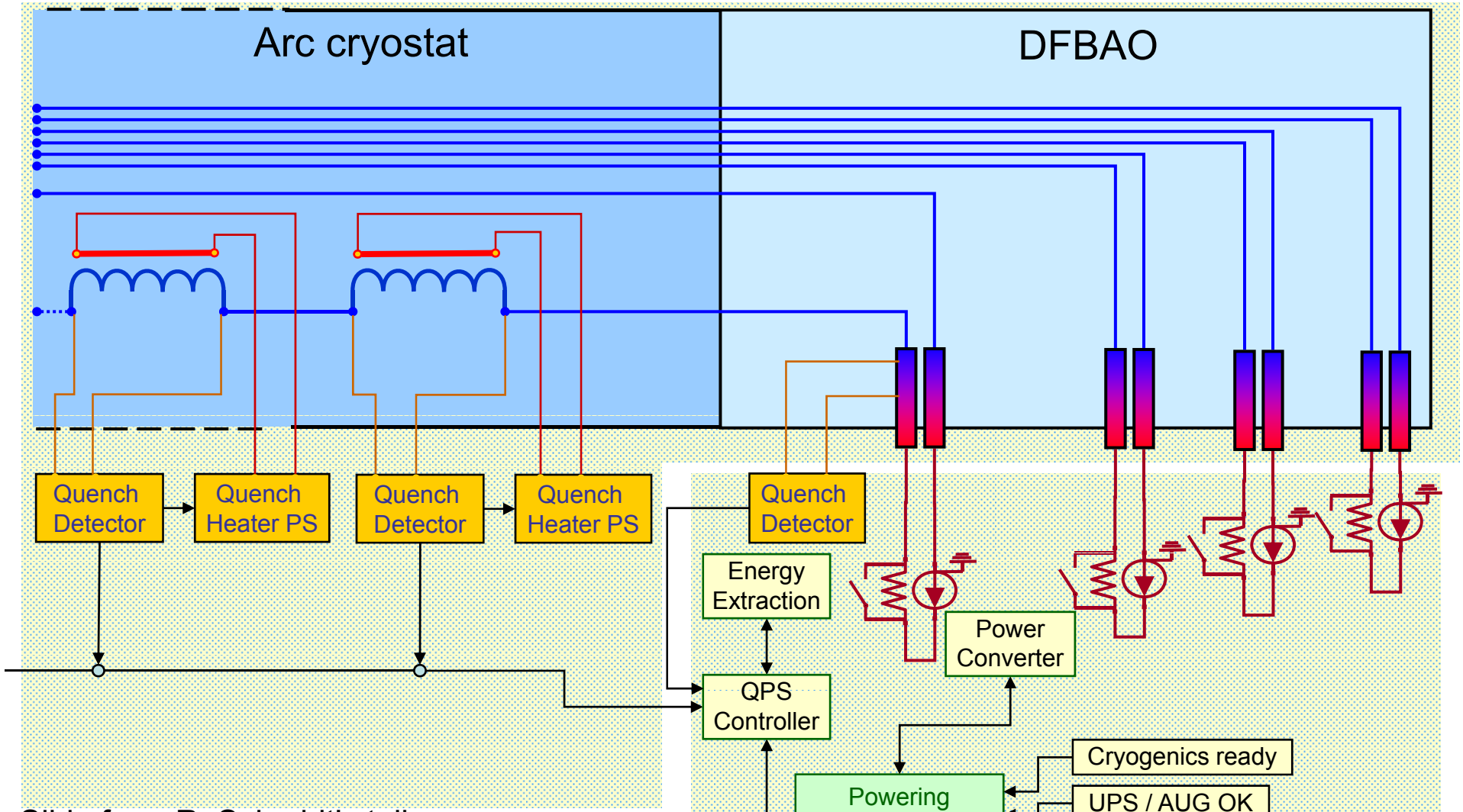

Slide from R. Schmidt's talk

Training for commissioning of the LHC powering system, 29 March 2007

Progress of Individual System Tests

of Power Converters

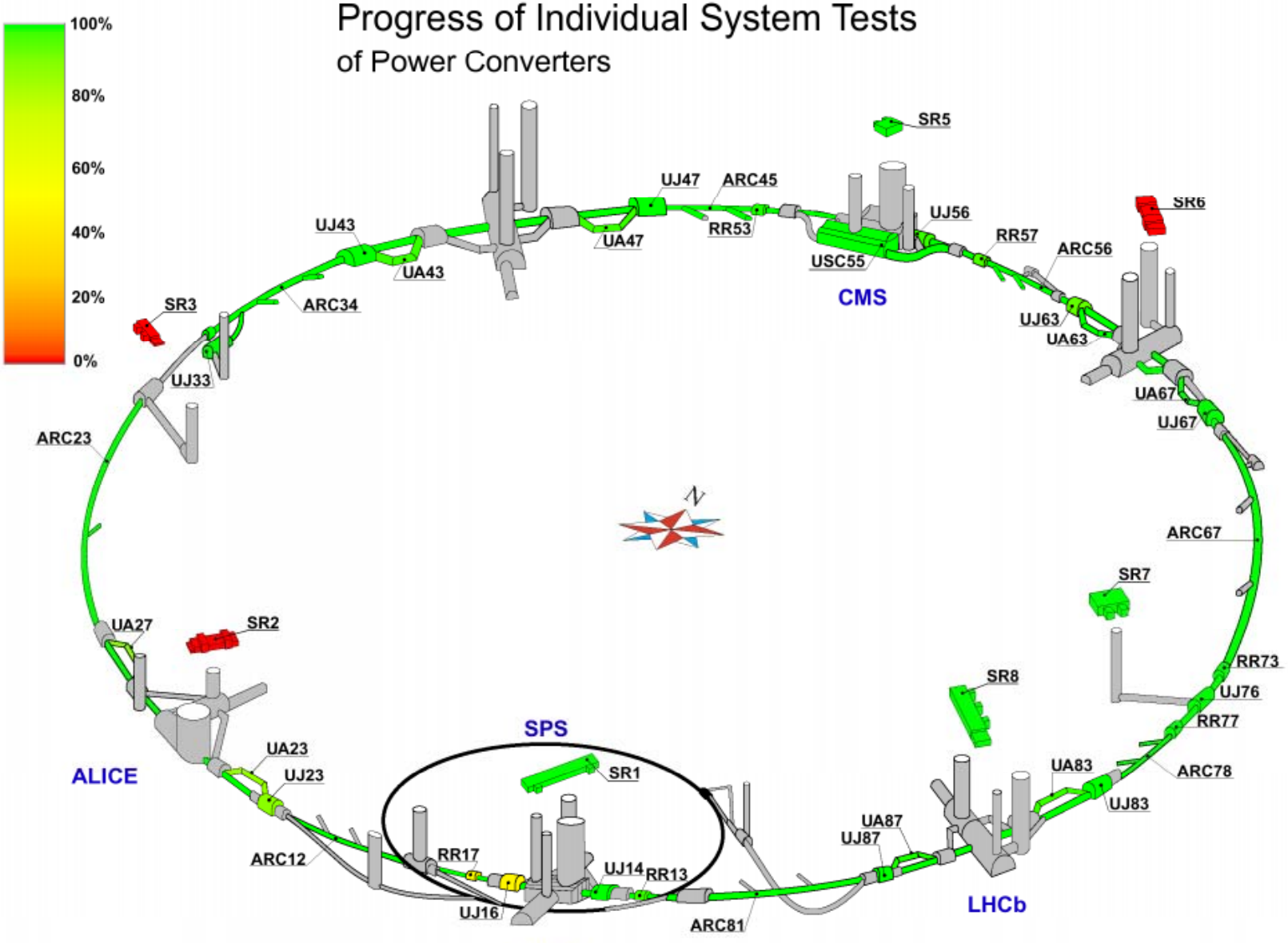

Updated 5 Nov 2007
by Jacek Szkutnik

Progress of Individual System Tests

of Circuits

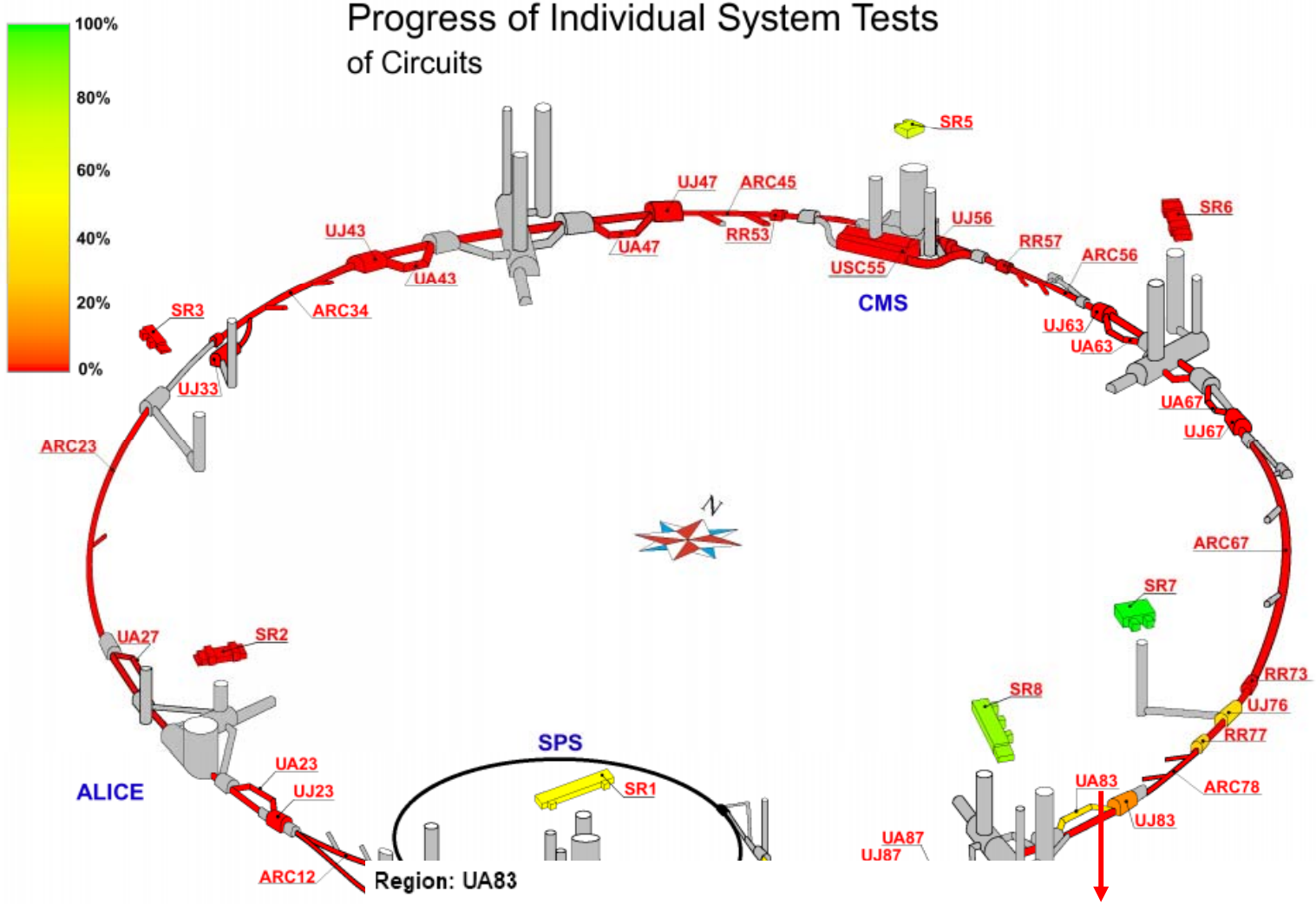

CLASS	DESCRIPTION	JOBS	DONE	%
RC02	Main Superconducting Circuit	146	104	71.2
RC03	Superconducting 600 A Without EE Circuit	374	34	9.1
RC04	Superconducting 120 A Correctors Circuit	474	162	34.2
RC06	Superconducting 600 A With EE Circuit	742	371	50
RC17	Superconducting 600 A Without EE With Crowbar Circuit	290	108	37.2
RC18	Individually Powered Quadruples Circuit	257	75	29.2
RC19	Inner Triplet Circuit	103	1	1
RC21	Individually Powered Dipoles Circuit	80	30	37.5

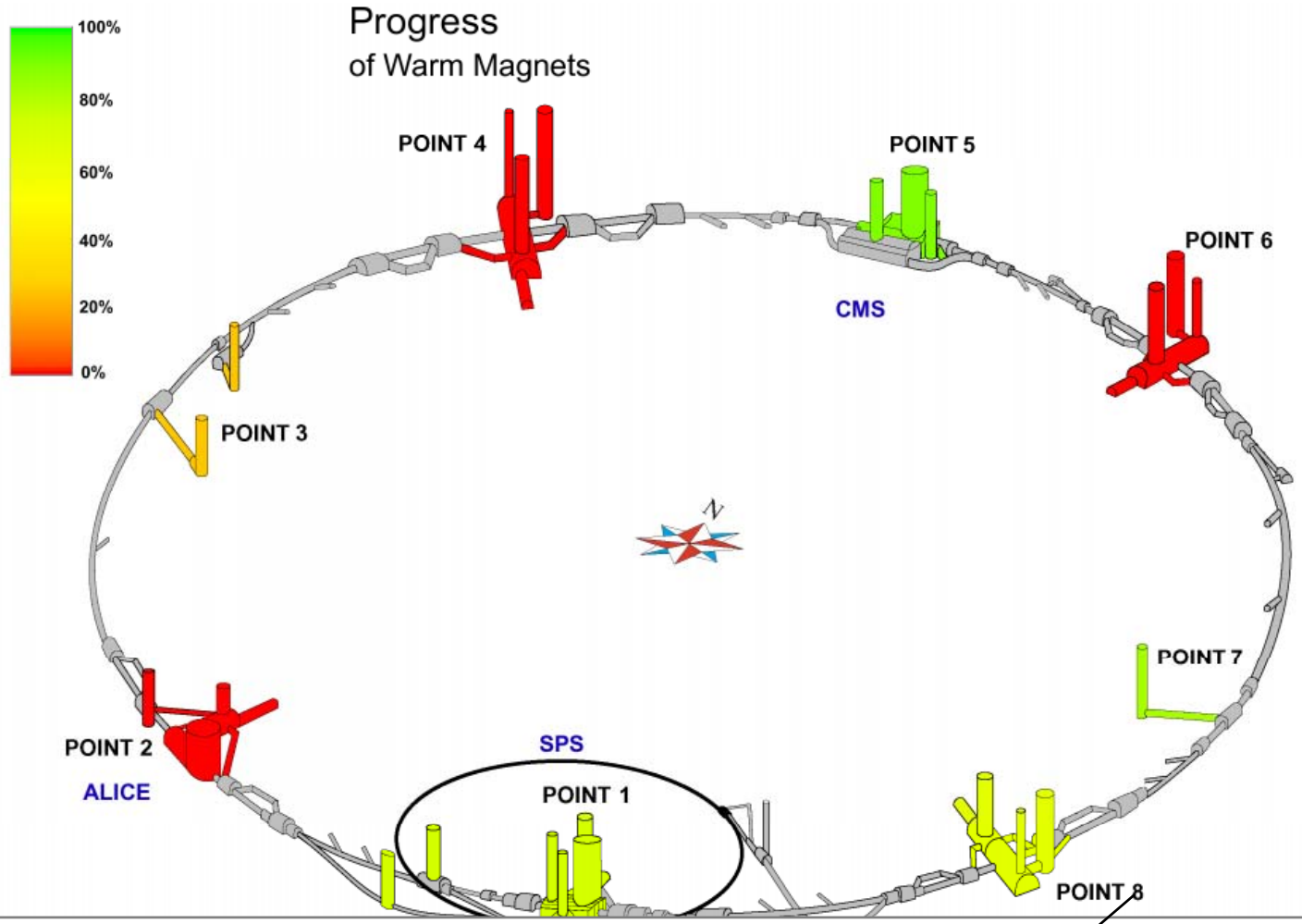

Location: Point8

Slots related to Warm Circuits Type 1

	Profile:	Cooling			Power Cables Non Water Cooled				Power Converter for Warm Circuits Type1	Warm Circuits Interlock Controller		ElQA for Warm Circuits	Warm Electrical Circuit Powered from Surface					
Slot name	Statistics for slot:	10-HCAFCW Connection and Priming	12-HCAFCW Water Quality and Filter Conditions	14-HCAFCW Flow Regulation	10-Ident./ Routing/ Polarity Check at Tunnel	11-Ident./ Routing/ Polarity Check at PC	12-Electrical Test	14-Connections Verification	10-Power Converter IST	10-Warm Circuit Magnet Interlock Test	12- Warm Circuit Power Converter Interlock	10-ELQA for Warm Circuits	10-Setup Warm Circuit Connection to Grid	12-Setup Warm Circuit PC Configuration	16-Setup Warm Circuit Performance Test	20-Warm Circuit Polarity Test	22-Warm Circuit 8h Hours Run	24-Warm Circuit 24 Hours Run
Statistics for step:		100%	100%	100%	100%	100%	100%	100%	100%	100%	100%	100%	100%	33%	0%	100%	67%	0%
RBXWH. L8	82%	Done: OK	Done: OK	Done: OK	Done: OK	Done: OK	Done: OK	Done: OK	Done: OK	Done: OK	Done: OK	Done: OK	Done: OK	Done: NOT OK	Done: NOT OK	Done: OK	Done: OK	Done: NOT OK
RBXWSH. L8	76%	Done: OK	Done: OK	Done: OK	Done: OK	Done: OK	Done: OK	Done: OK	Done: OK	Done: OK	Done: OK	Done: OK	Done: OK	Done: NOT OK	Done: NOT OK	Done: OK	Done: NOT OK	Done: NOT OK
RBXWSH. R8	88%	Done: OK	Done: OK	Done: OK	Done: OK	Done: OK	Done: OK	Done: OK	Done: OK	Done: OK	Done: OK	Done: OK	Done: OK	Done: OK	Done: NOT OK	Done: OK	Done: OK	Done: NOT OK

What will be the status of the systems after hardware commissioning?

- **Aim of HC**: **all systems ready to run at nominal performance** level
- **Reality**: Non conformities list → energy limit, maybe optics changes
- HC procedures are well defined
- Test results are stored in MTF
- The "base" systems clients of the PIC (QPS, PC, EE, Cryogenics interlocks) are fully tested during HC
- HC from CCC uses software more or less similar to definitive (sequencer)
- A complete "vertical cut" of magnet controls and software was already tested during HC (Heat Runs, Squeeze tests)
- Hardware commissioning is completed by PAC (powering all circuits in a sector)

If we suppose HC goes as planned, i.e. no further consolidations (thermal cycles)….. what else is missing ? →

Not covered by HC

- HC ends with PAC (powering all circuits…within a sector), no PACS (Powering All Sectors)! This has to be done during machine checkout (tracking between sectors)
- HC delivers circuits tested to maximum current and current ramp rates (from Layout DB, in general). But it does not check the detailed current cycles → Settings generation and cycle tests remain to be done (LSA, FIDEL)

→ Create and load cycles {I, t} for each circuit and phase (8 MB circuits, 16 MQ circuits, etc…)

- Technical support during cold checkout and operation (from HC)?

- *Checkout = make sure settings are there for all circuits, and that Trimming facilities are operational for all parameters (momentum, coupling, tune, chromaticity, spool pieces corrections, etc…)*
- *Dry run = all circuits run through the operational cycles*

Magnets entry conditions for phase A.1

- **E.A.1.4 Deliverables for the power circuits**.

- 01 Cryogenics. → (OK from HWC)
- 02 Cryostat instrumentation. → (OK from HWC)
- 03 Powering interlocks. → (OK from HWC)
- 04 QPS and energy extraction. → (OK from HWC)
- 05 Power converter currents checked.
- 06 Main lattice circuits (dipoles, quadrupoles) pre cycled to I_nominal, then powered to I_inj.
- 07 Correction circuits pre cycled to I_nominal, then powered to I_inj.
- 08 Experimental magnets & compensators OFF. → (OK ?)
- 09 Separation and crossing bumpers OFF . → (OK ?)
- 10 Online FiDeL magnetic model available via LSA

Software situation for magnets

- Settings generation software is available, from optics and LSA database → LSA team
- Filling LSA database with magnet data is ongoing → FIDEL team
  - At the moment MB and MQ are in, the rest is automatically taken from the layout DB
- Trim application exists → LSA team
- LHC Sequencer still under development, but working version exist (Reyes)
- Global PM application under development (AB/CO)

Tracking tests in SM18 (AB-AT eam)

- Two MB (with their b_3 and b_5 correctors) and one SSS (MQ) at 1.9 K
- Using full LSA functionalities
- Aims: MB/MQ ; MB/MB tracking, b_3 and b_5 correction during a “real” machine cycle

B_2/B_1 tracking

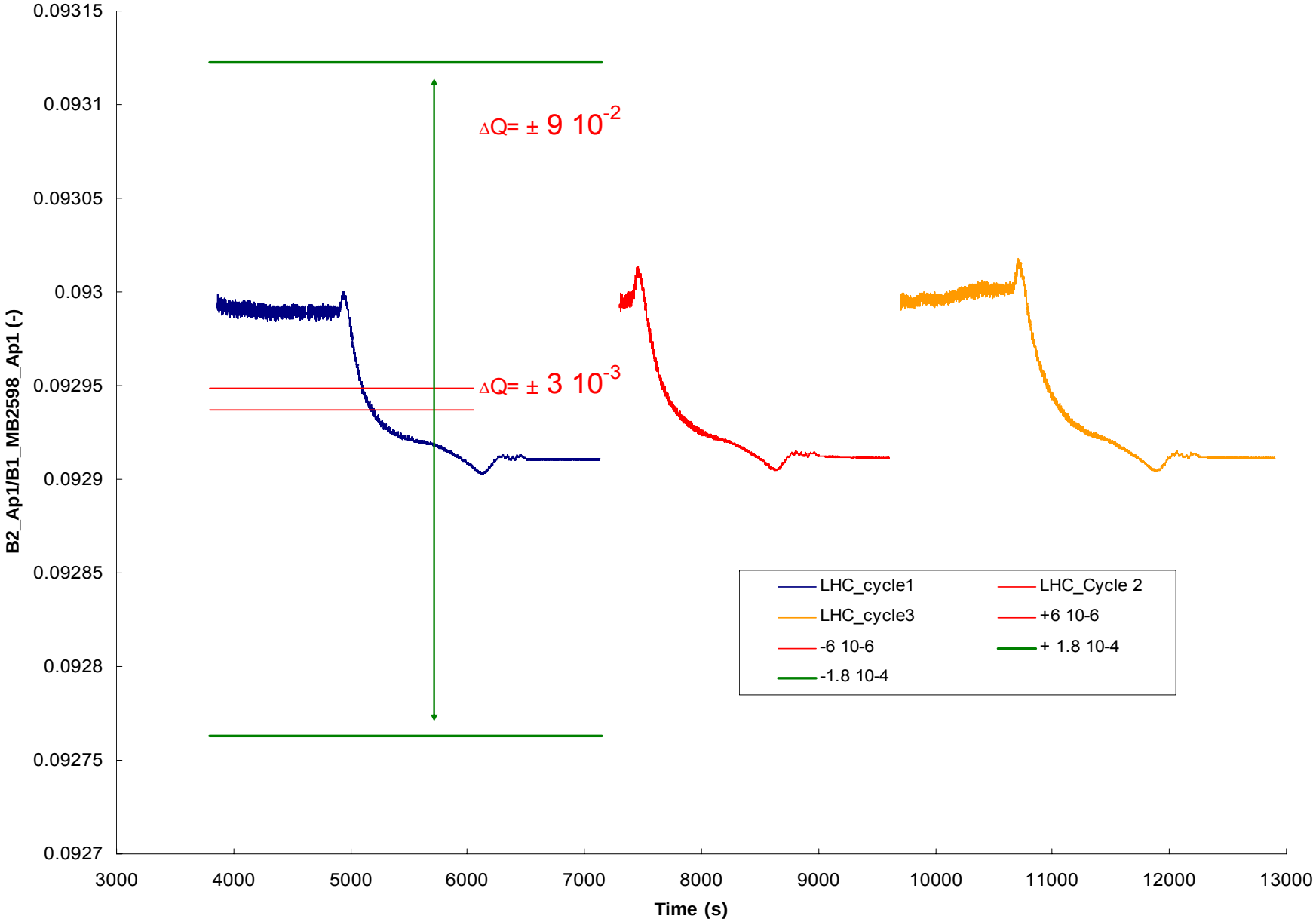

b3 compensation

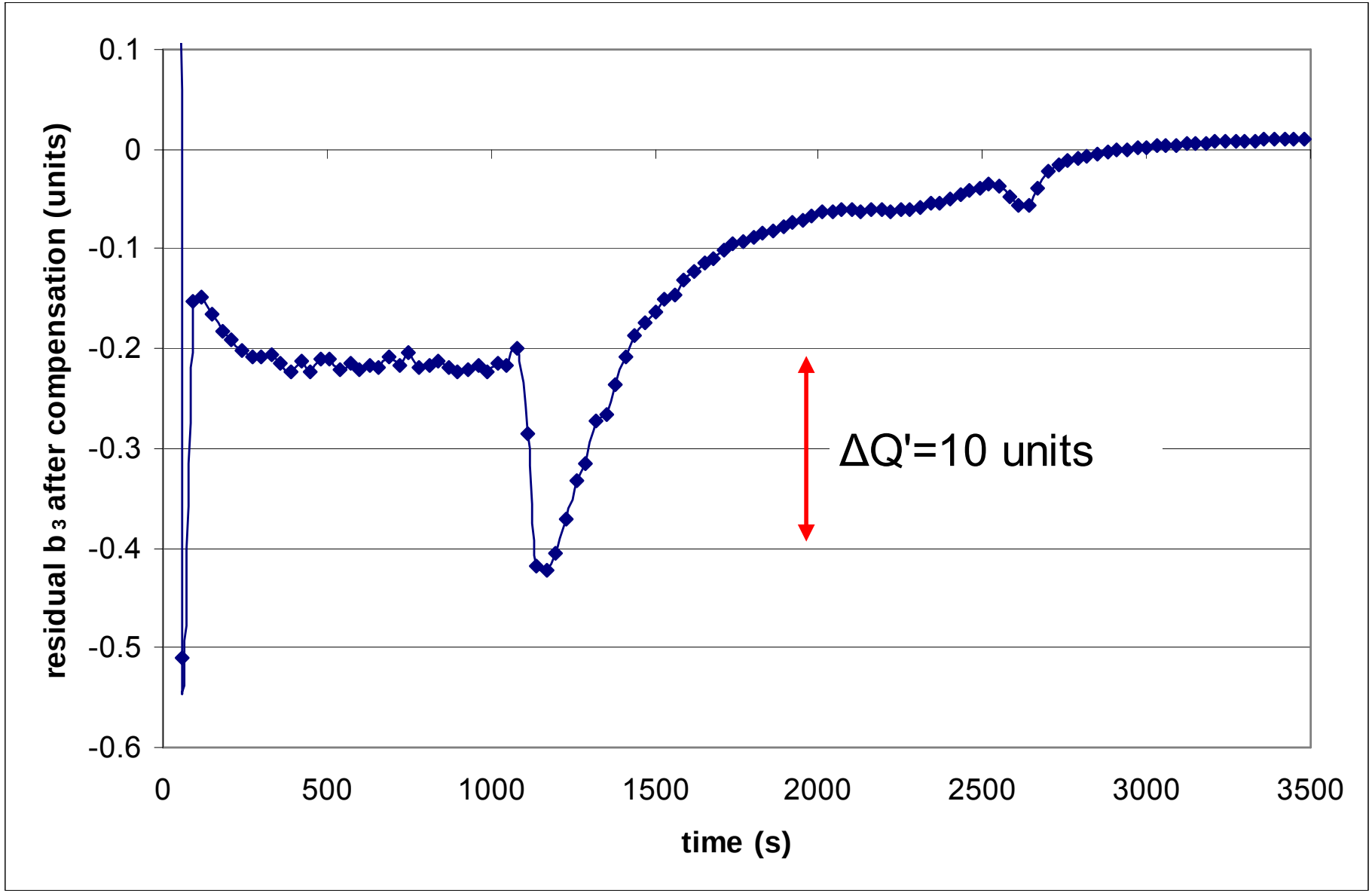

Concluding remarks

- A lot of work is being done to prepare the magnet circuits, by many actors: HC { MMP, QPS, EE, PO etc), LSA, FIDEL
- Dry runs of individual sectors during hardware commissioning will be extremely useful. But: are they compatible with the HC schedule?
- SM18 “playground” is shared with other activities (RF)
- Pre-cycle policy will have to be adapted to the variable scenarios
- Technical support (re powering after quench, etc) must be clearly defined and organized (hopefully not too difficult after months of collaboration during HC)