Calculation and measurement of thermal radiation through a pipe-shaped shield

ICRR, Univ. of Tokyo, KEK[A], NAOJ[B]

Yusuke SAKAKIBARA,
Nobuhiro KIMURA[A], Toshikazu SUZUKI[A], Kazuhiro YAMAMOTO,
Shigeaki KOIKE[A], Ryutaro TAKAHASHI[B], Chihiro TOKOKU,
Yoshio SAITO[A], Tomotada AKUTSU[B], Kazuaki KURODA

2014.7.10 ICEC 25 – ICMC 2014 (University of Twente, Enschede, the Netherlands)

Contents

- Interferometric cryogenic gravitational wave detector (KAGRA)
- Pipe-shaped radiation shield (duct shield)
  - Thermal radiation
    - Calculation
    - Measurement (supported by Jecc Torisha)
- Future work

KAGRA (Large-scale Cryogenic Gravitational wave Telescope)

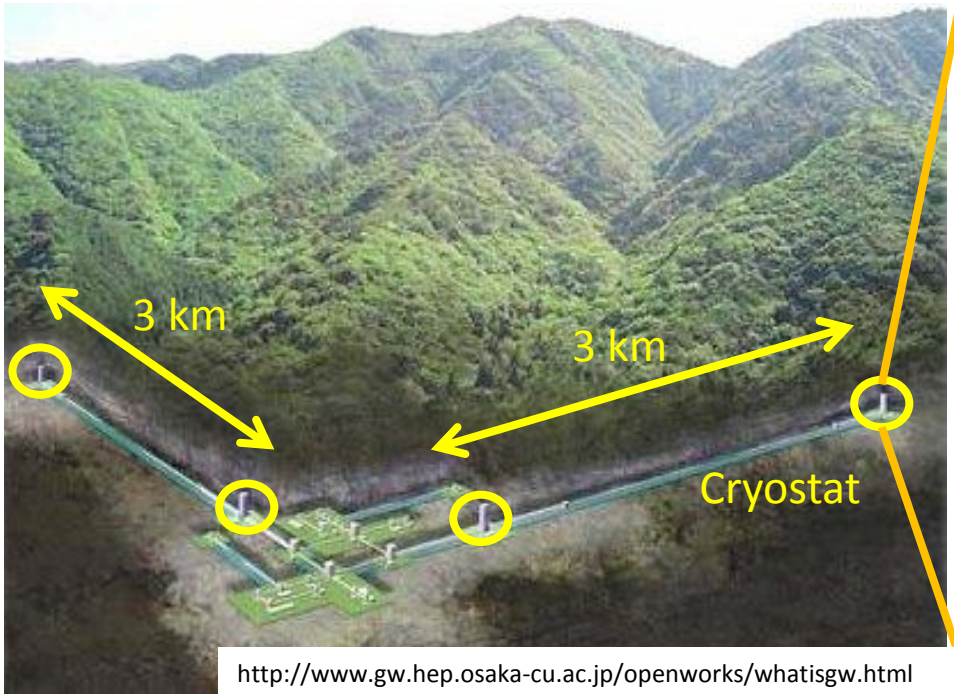

http://www.gw.hep.osaka-cu.ac.jp/openworks/whatisgw.html

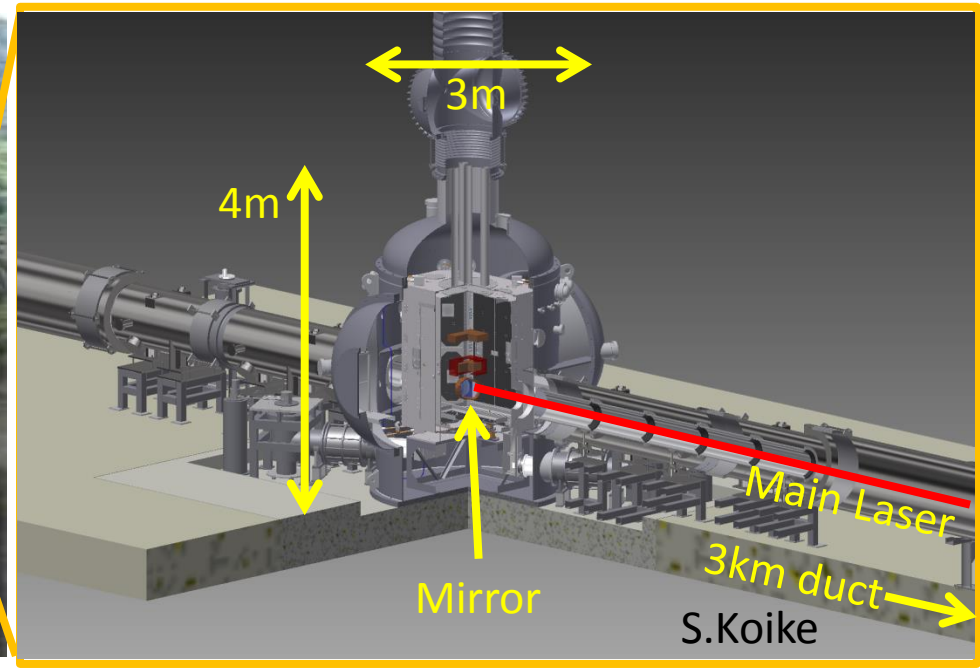

- KAGRA aims to detect gravitational waves from coalescence of binary neutron stars more than once per year
- Features
  - Kamioka underground with small seismic motion
  - Mirrors (~20 kg) are cooled down to 20 K
    - Reduce thermal noise

Purpose of duct shields

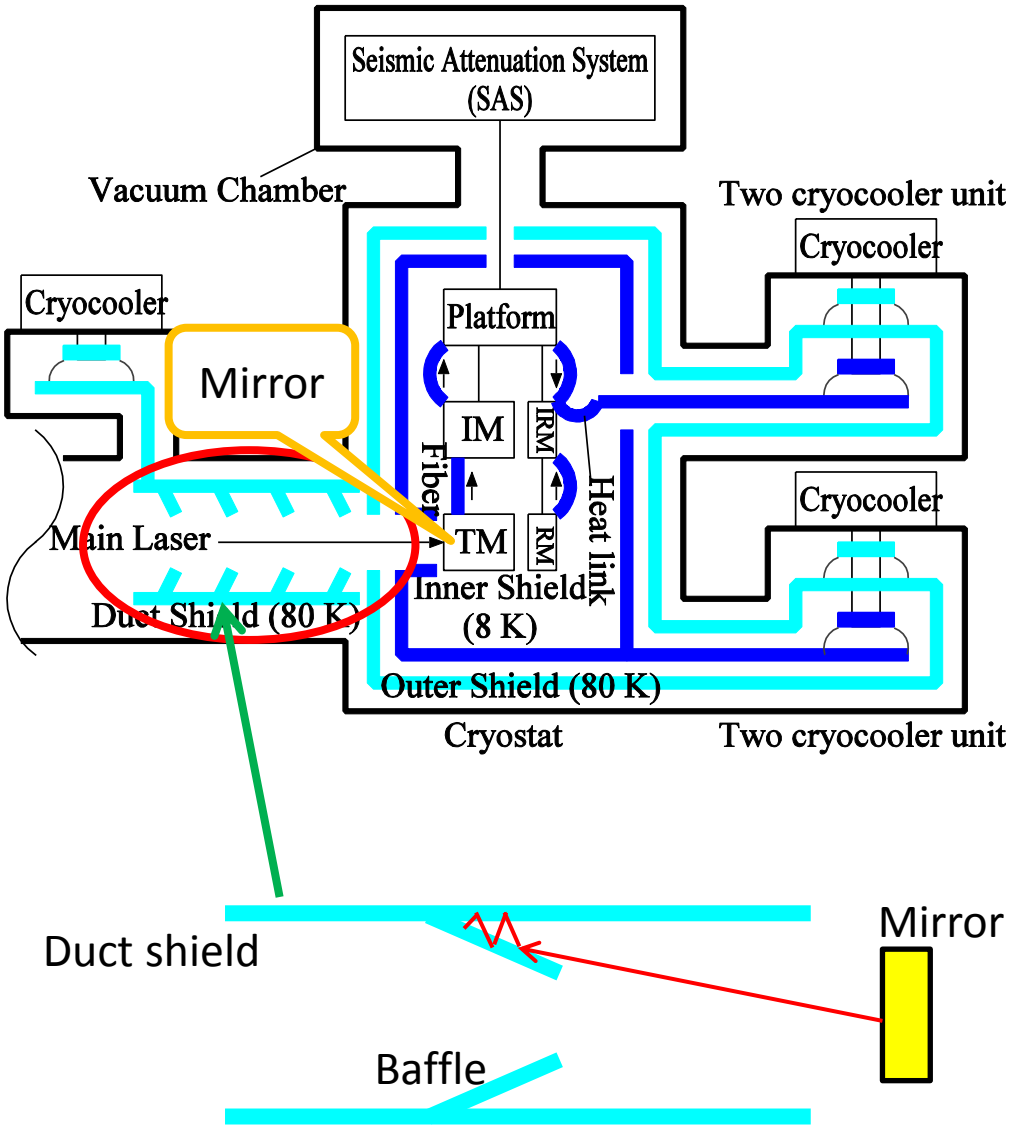

- Only suspension system is cooled down (3 km duct and SAS: 300 K)
- Mirror must be surrounded by radiation shields
- Holes for main laser are necessary
- Duct shields
  - To reduce thermal radiation
    - Duct to decrease solid angle to 300 K region
    - Duct reflects radiation
    - Baffles can reduce thermal radiation through duct shield
  - To cause no scattered light noise
    - Small vibration with rigid supports

Design of duct shield

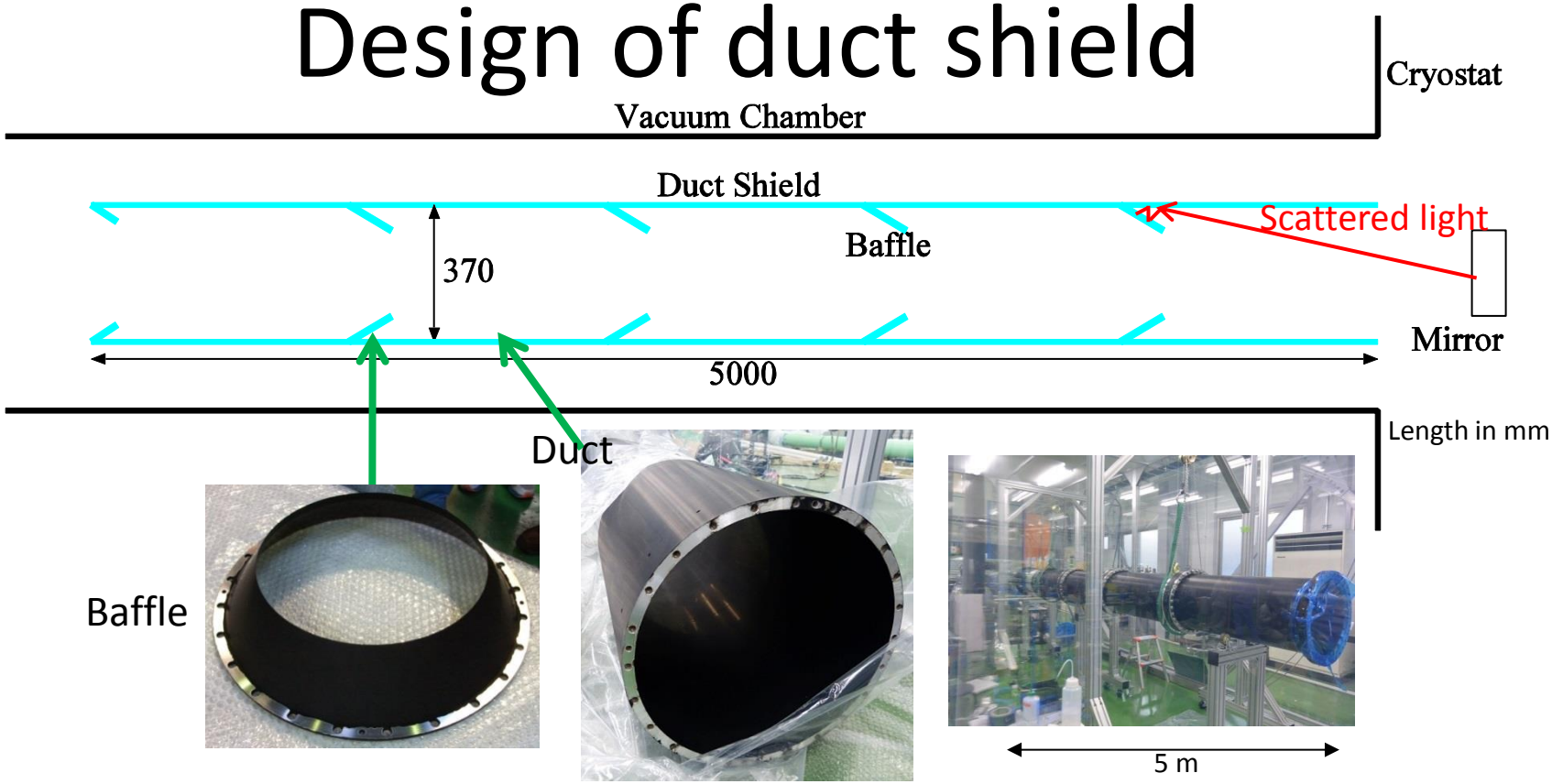

- Baffles are designed to satisfy KAGRA requirement of thermal radiation and scattered light
- Duct and baffles are coated with black coating Solblack to absorb thermal radiation and scattered light
- Baffles are tilted to catch scattered light
- Cooled down by one cryocooler

Calculation of thermal radiation

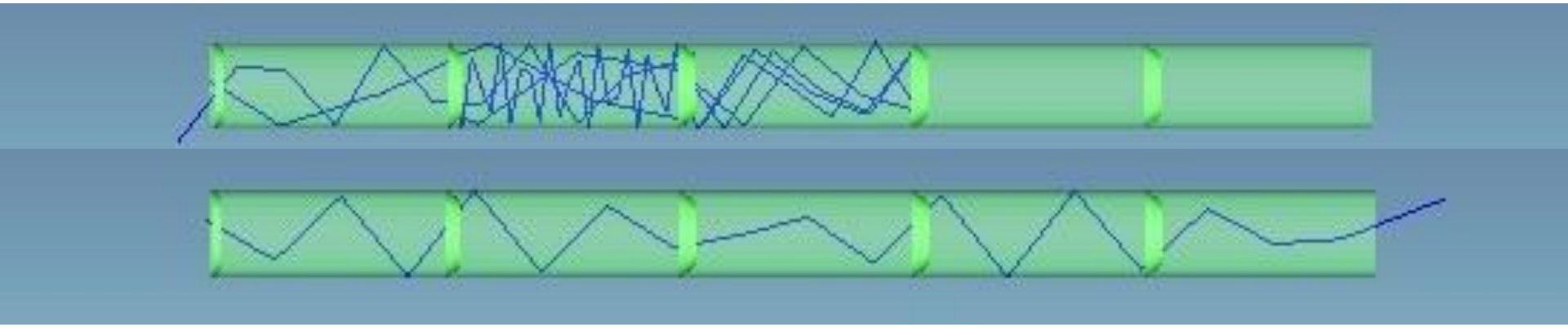

Reflectivity (Al + Solblack) used for calculation

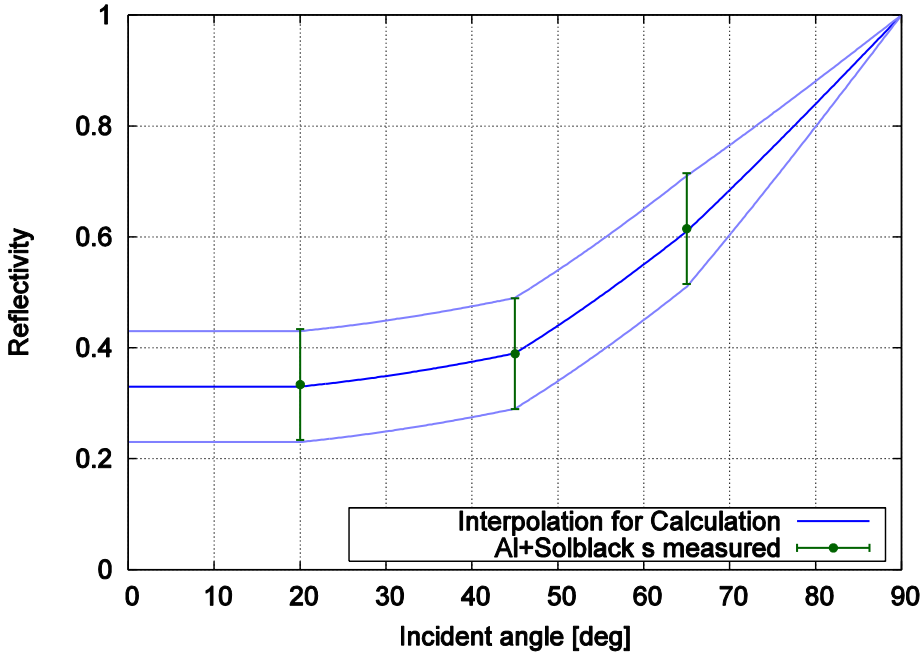

- Rays are reflected by duct shield many times -> power of rays is reduced
- Radiation was calculated by commercial ray-tracing software ZEMAX
  - Rays of thermal radiation were emitted with random direction
  - When ray hits duct shield, power of ray is multiplied by reflectivity

Measurement of thermal radiation

Plates made by N. Kudoh (KEK)

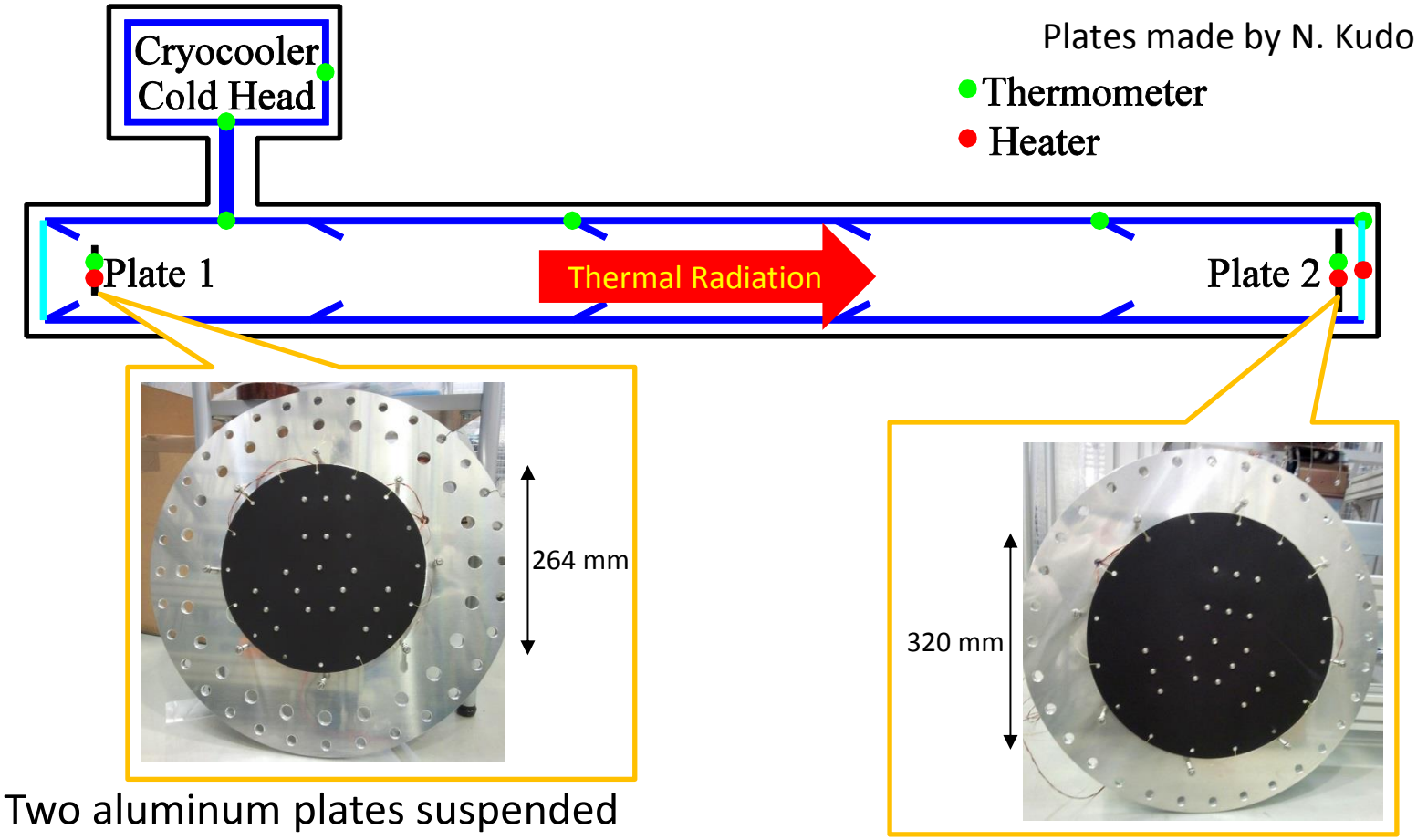

- Two aluminum plates suspended
  - Coated with Solblack to enhance emissivity or absorptivity
  - Plate 1 is heated up to 300 K and emits thermal radiation
  - Plate 2 absorbs radiation and is heated up
  - Calibration is conducted using heater on plate 2

Results

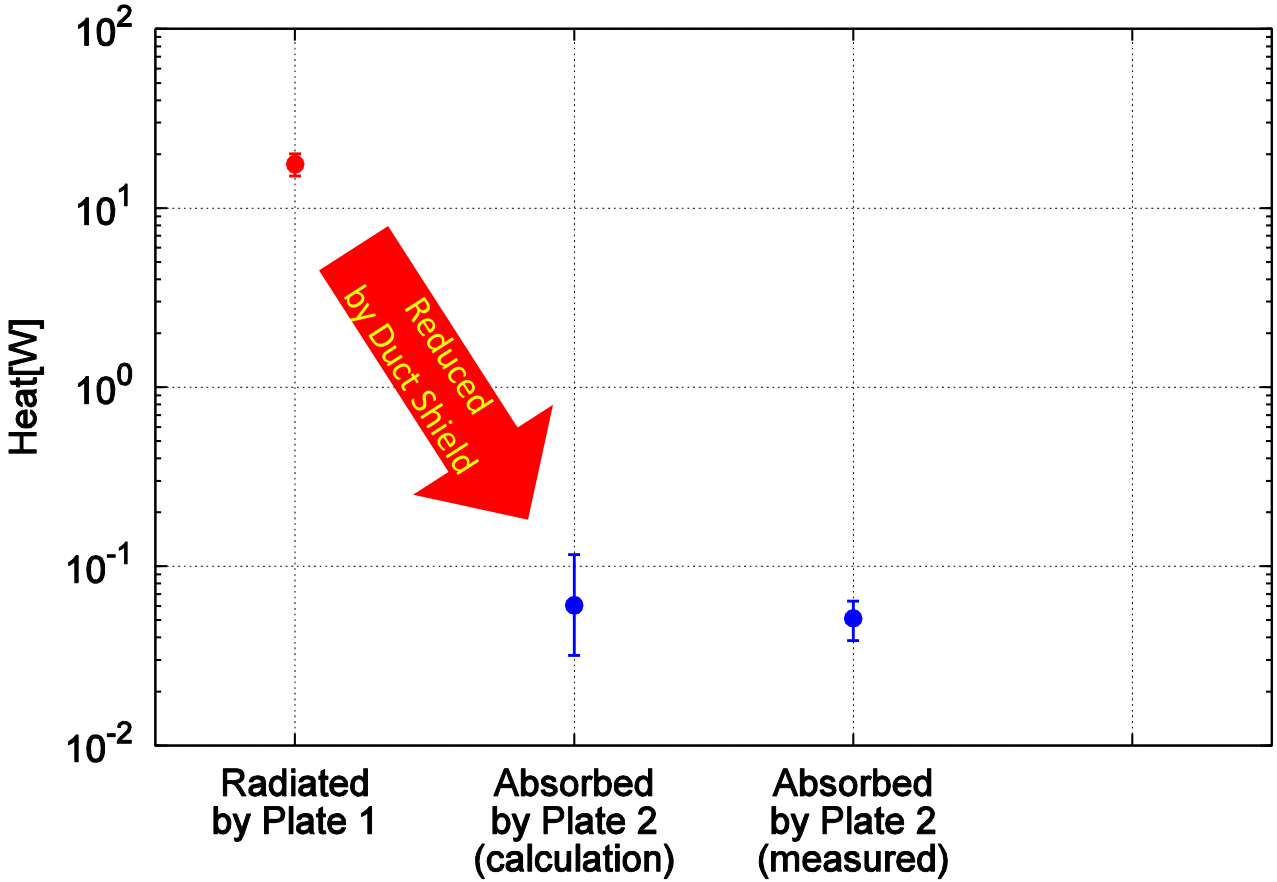

- Calculation predicts only order of magnitude of heat input
  - Measured reflectivity at 10 um of shield has error
  - Rays are reflected by shield many times
- Mirror will absorb 10 mW (It satisfies KAGRA requirement: 1 W including laser absorption)

Results

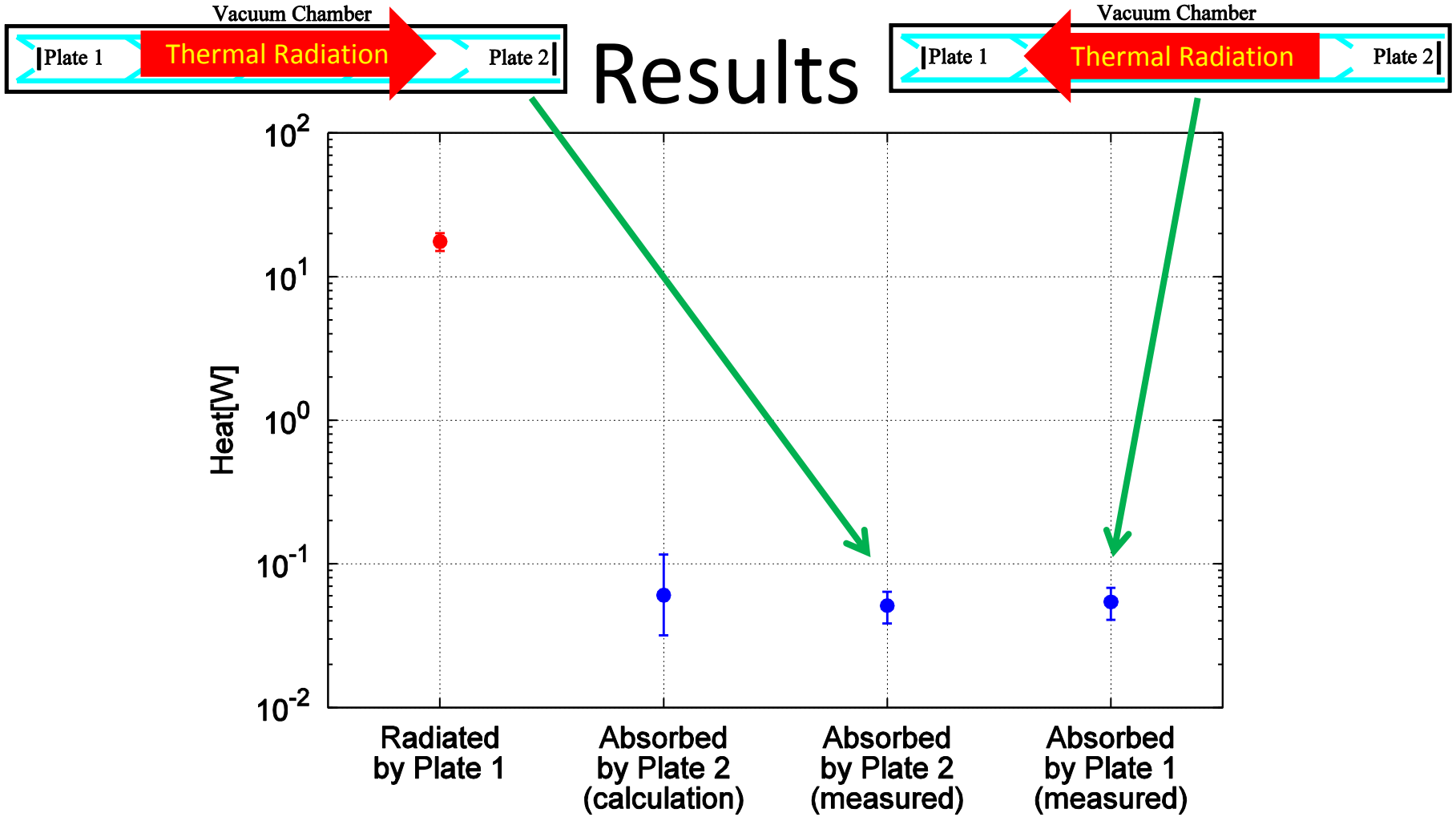

- Experiment where PLATE 2 is heated up to 300 K and PLATE 1 absorbs radiation was conducted
- Heat transfer of left and right direction should be equal
  - Otherwise, even if two plates have same temperature, heat will be transferred

Results for duct shield No.2

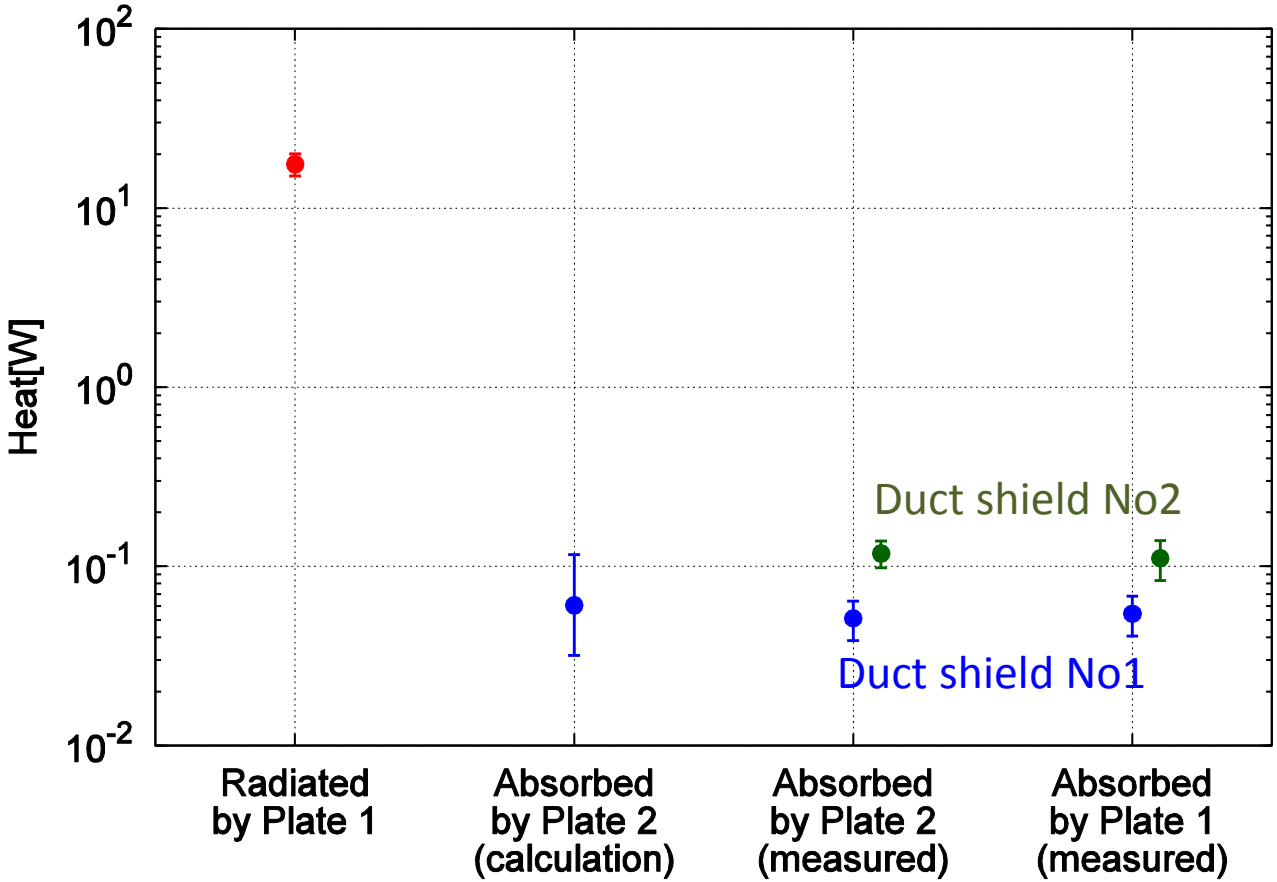

- Thermal radiation through duct shield No.2 is near upper edge of calculation
  - Difference of reflectivity of Solblack by 0.1
    - Difference of condition (uneven thickness, crack,…) of Solblack coating (under investigation)

Temperature log (duct shield No.1)

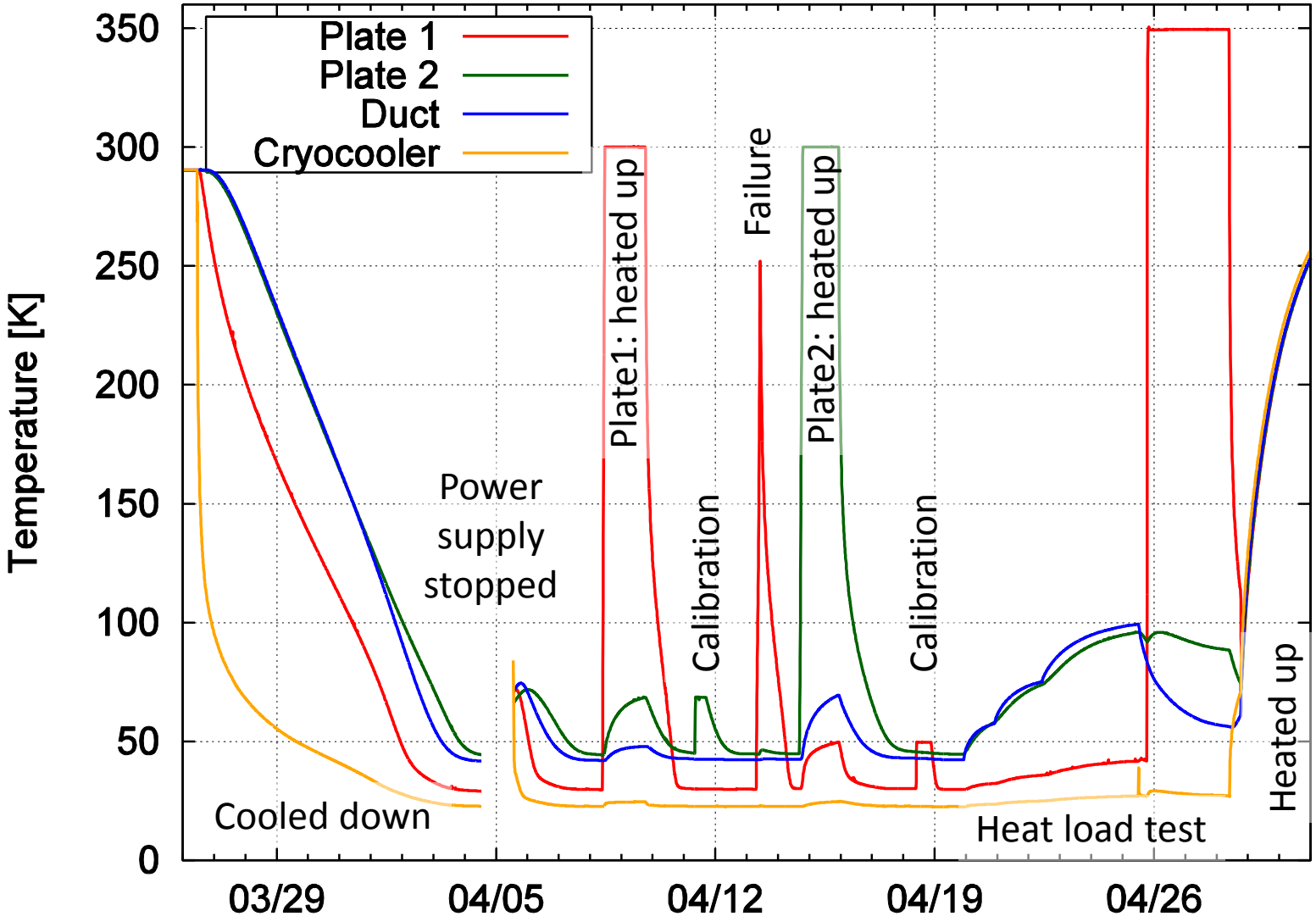

Temperature log (duct shield No.2)

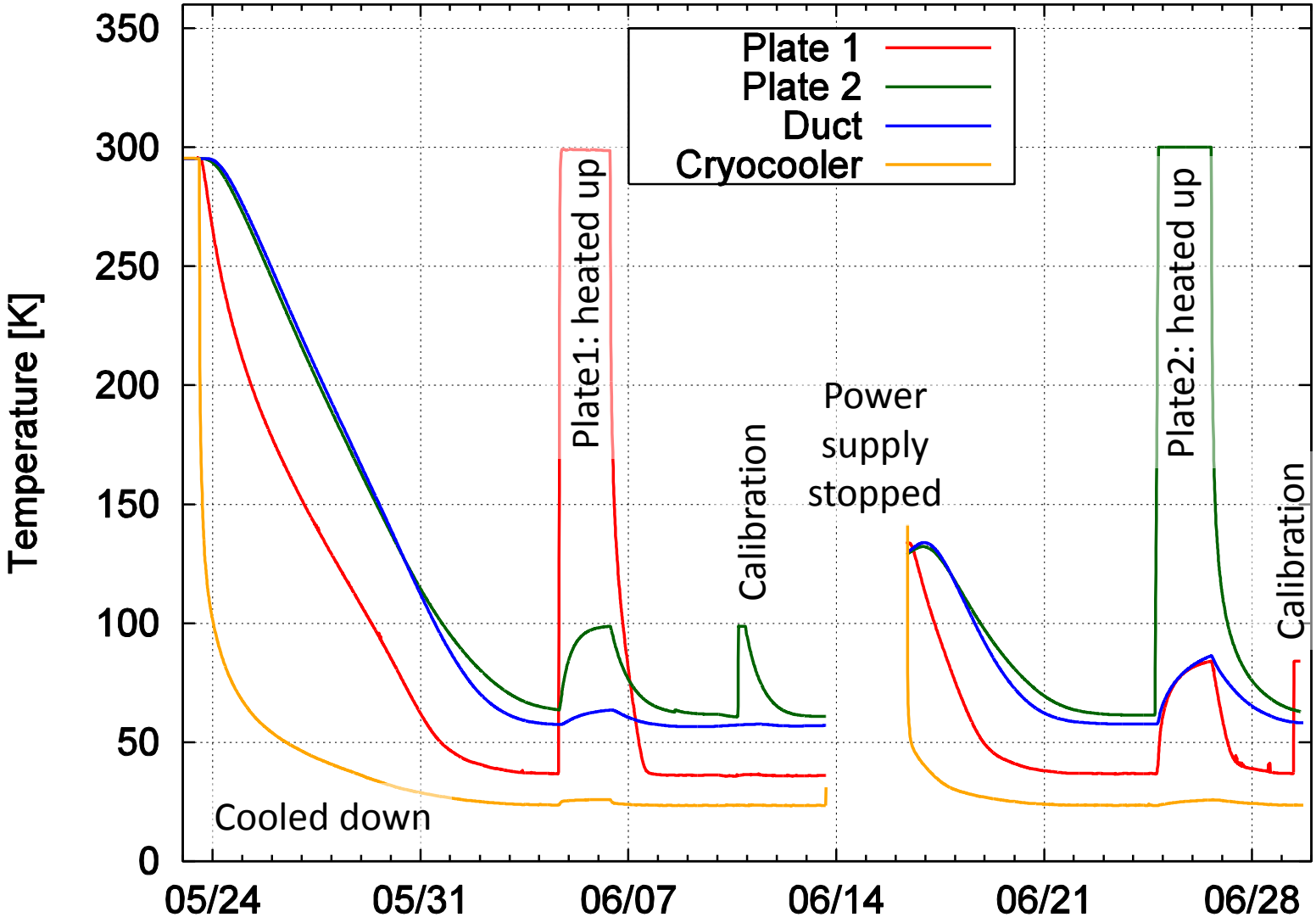

Summary

- Summary
  - Duct shields were designed to satisfy KAGRA requirement of thermal radiation and scattered light
  - Thermal radiation through duct shield was measured
    - Result is consistent with calculation and satisfies KAGRA requirement although there is variance between duct shields

- Future work
  - Investigation of variance between duct shields
    - Similar measurements for remaining one duct shield will be conducted to check if the result is reproduced
  - Estimation of scattered light noise

Design of duct shield

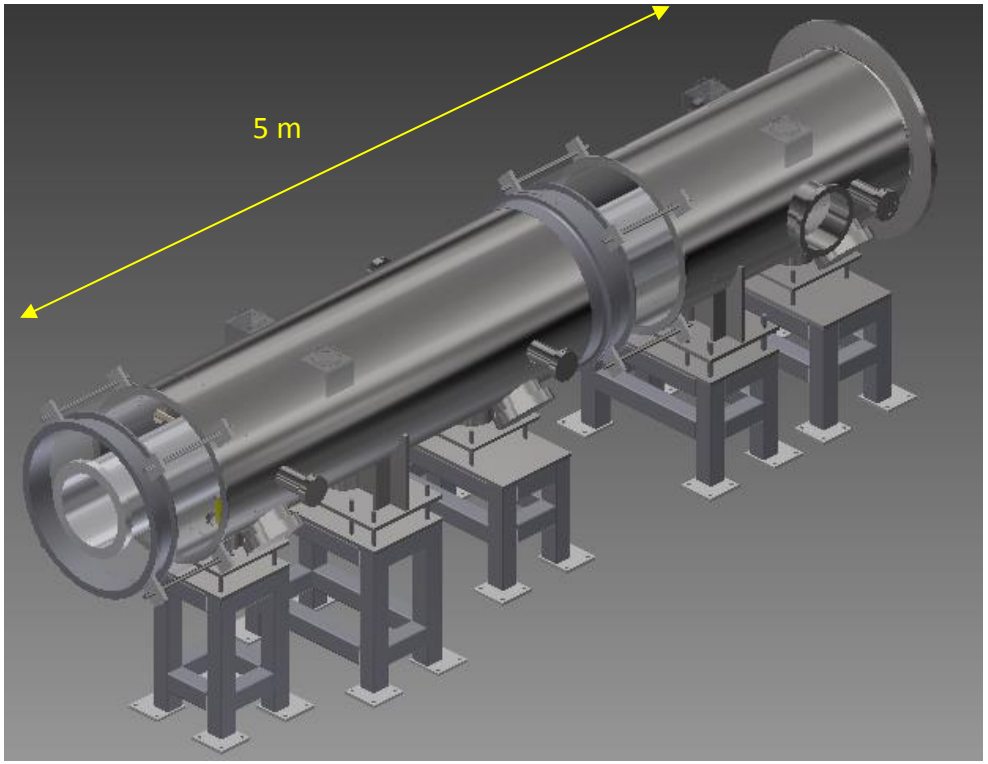

S. Koike

- Vacuum duct and duct shield is fixed rigidly to the ground to reduce vibration, and, to reduce scattered light noise

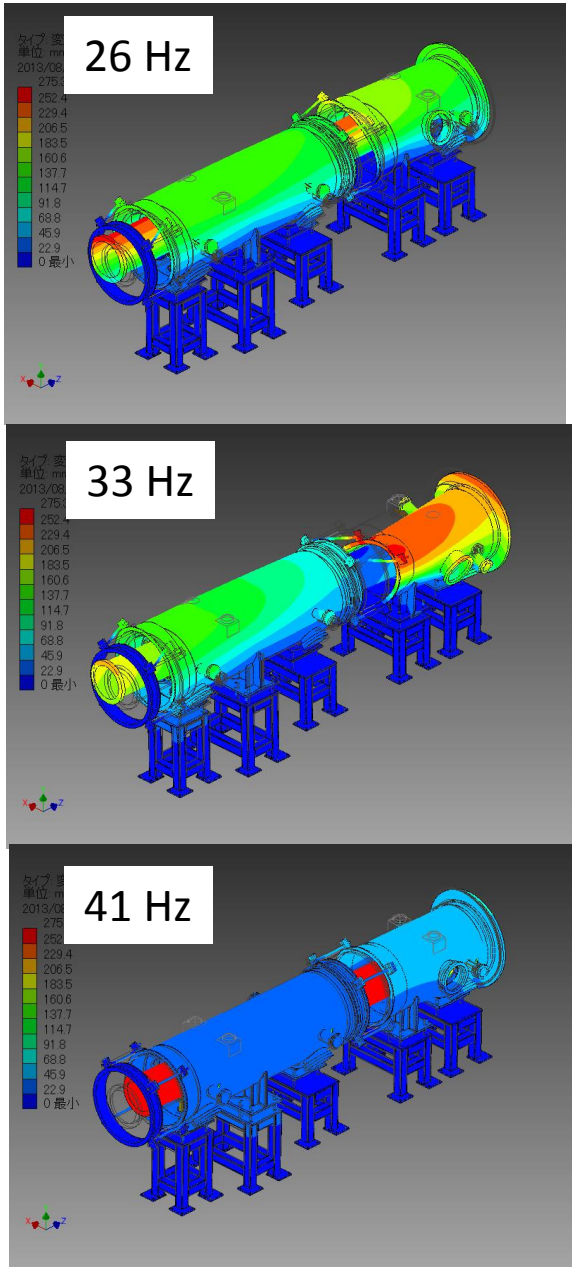

Heat load test

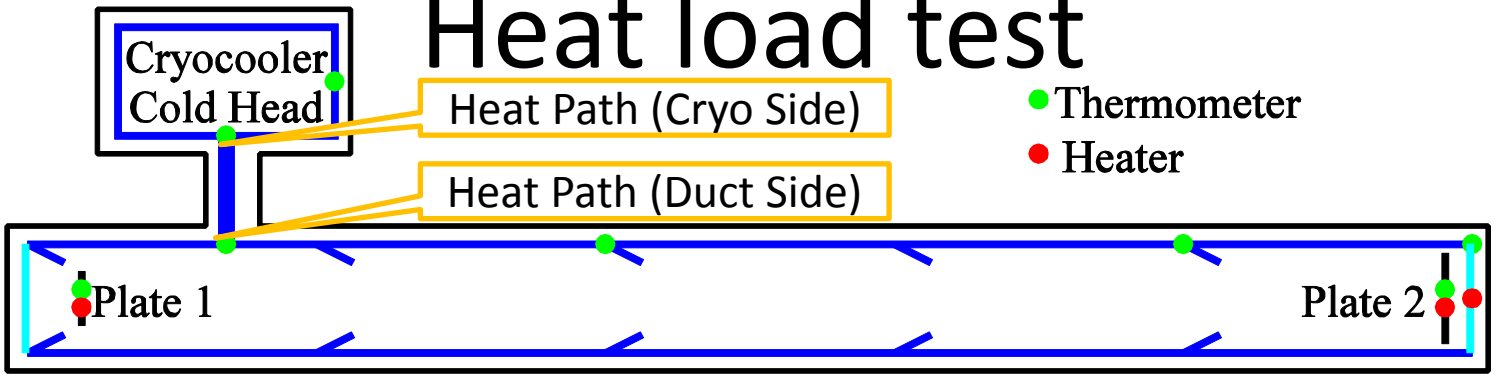

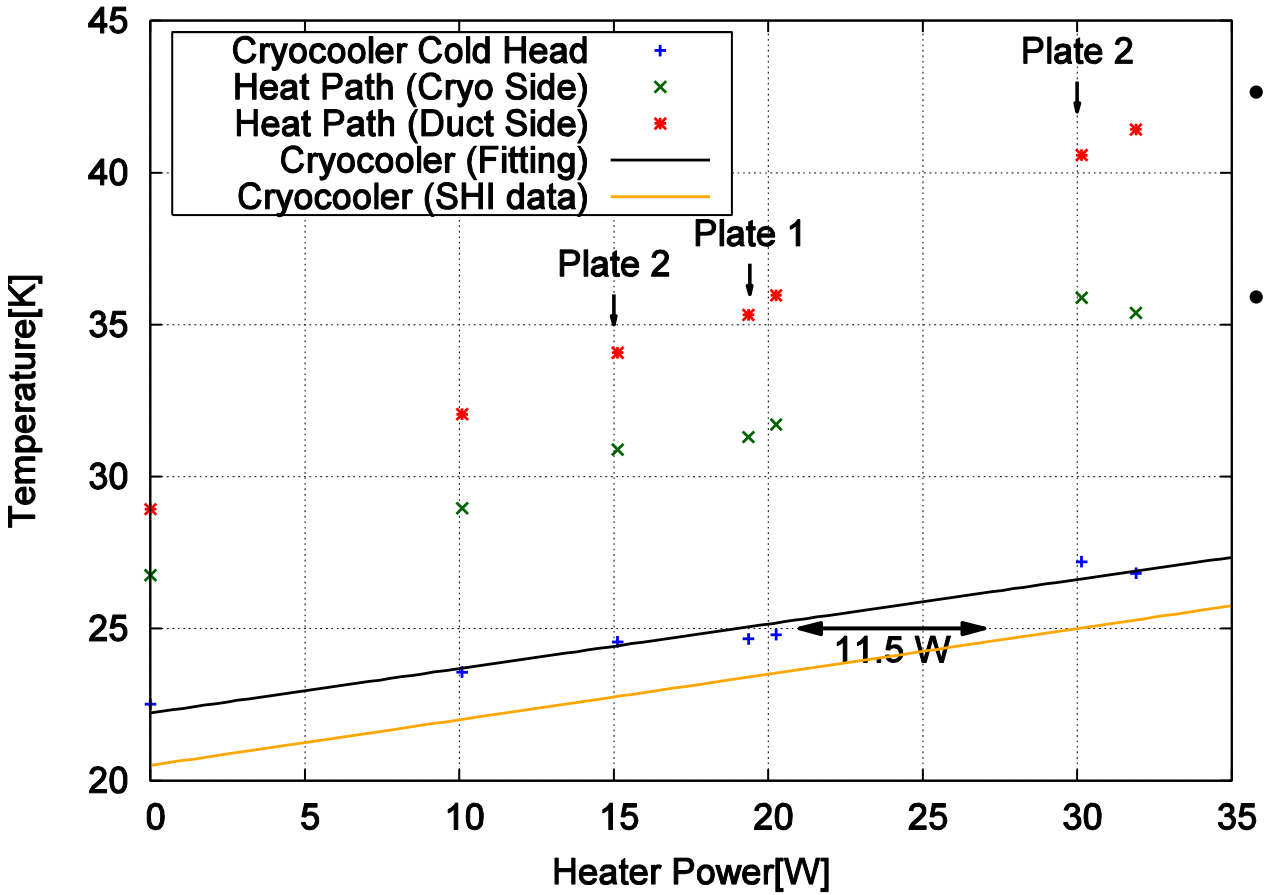

- Heat load is applied by three heaters on duct shield
- Heat input without heater is consistent with thermal radiation from SI ~10 W