Ground Operations Demonstration Unit for Liquid Hydrogen (GODU LH2)

Dr. William Notardonato
Cryogenic Test Laboratory
NE-F6, KSC FL 32899
bill.notardonato@nasa.gov
(321) 867-2613 (office)
(321) 412-5352 (cell)

Content

- Background
  - Hydrogen and NASA
  - Shuttle Operations
  - Past Investigations
- GODU LH2 Project
  - Goals and Objectives
  - Design
  - Status
- Future Plans

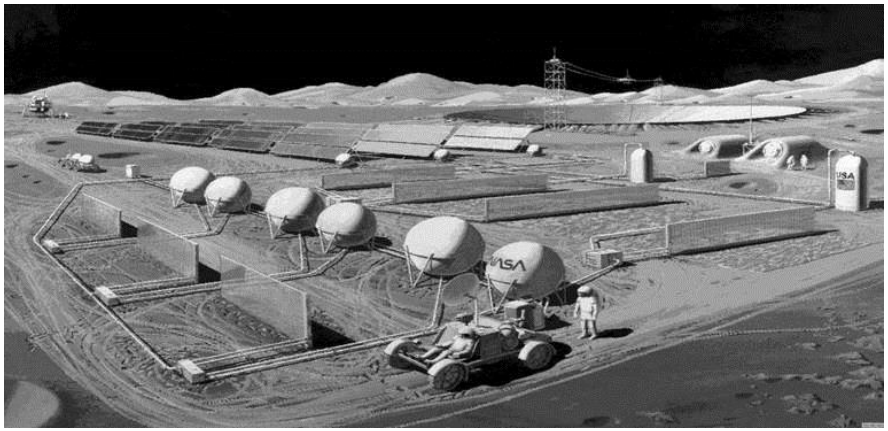

NASA LH2 Background

- NASA helped drive development of large scale LH2 industry in the 1950's and 1960's
- LC 39 built for Apollo Program and modified for Shuttle Program
- LC 39B currently being reconfigured for Space Launch System (SLS)

Status of KSC LH2 Systems

- Since the completion of LC 39, cryogenic technology has progressed, in many cases by two generations
  - Refrigeration systems
  - Transfer lines and disconnects
  - Compressors and valves
  - Controls and instrumentation
- Spaceport hydrogen operations are different from every other industrial gas customer, and industry is not optimized to meet our needs
  - Large scales
  - Unsteady demand and high peak demand
  - Strict delivery requirements
- Hydrogen has a reputation as a difficult and expensive fuel choice, but necessary due to performance benefits

LH2 Losses for Shuttle Program at KSC

- 54.2 M gallons purchased over life of the program at KSC
  - Historical KSC use efficiency is approximately 55%
  - Defined by mass launched/mass purchased
- Replenish loss
  - Heat leak during transit, chill-down of transfer system, and tanker pressurization
  - 12.6 % of the KSC hydrogen purchased or 6.8M gallons
- Normal Evaporation Loss
  - heat leak from the ambient to the ground storage tank
  - 12.2 % of the KSC hydrogen purchased or 6.6M gallons
- Load Loss
  - Chill-down of ground and flight system and ET heat leak during replenish
  - 20.6 % of the KSC hydrogen purchased or 11.2M gallons
- On board quantity
  - Chill-down of ground and flight system and ET heat leak during replenish
  - 54.6 % of the KSC hydrogen purchased or 29.6M gallons

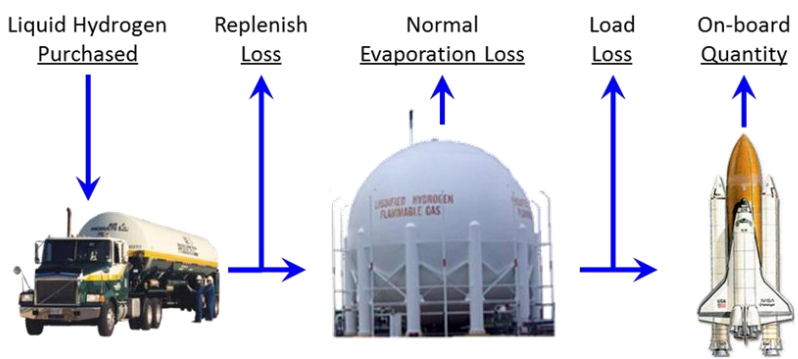

Future Spaceport LH2 Goals

- Goal is to increase the efficiency of hydrogen operations to >80%
- Targeted hydrogen losses
  - Storage tank boil off
  - Chill down losses
  - Tanker venting recovery
  - Line drain and purge
  - Tank venting
- Local hydrogen production and liquefaction capability
  - Sized for KSC needs but allowed to sell offsite
- Propellant conditioning and densification
  - Bulk temperature to 16 K
  - Thermal energy storage for load balancing
- Reduction in helium use
- Reducing in spaceport carbon footprint

Economic Justification

- Several studies over the past 40 years have shown economic payback of hydrogen ZBO system at LC-39
- Basic economic models have been developed
- Average annual hydrogen demand for both business as usual and advanced systems scenarios is estimated
  - All losses except for loading losses are assumed to be recovered
- Capital costs for hydrogen production, distribution, liquefaction, and transfer lines are estimated
  - Well known cost models for production, distribution, and liquefaction used
  - No cost savings for smaller storage volumes included
- Operational costs only considers natural gas and electrical cost, does not include labor savings
- Payback period depends on system size, LH2 cost, electric cost, storage volume, refrigeration efficiency, hydrogen recovery modes, and capital costs
- Payback period varies from 5 years to 12 years compared to current system

GODU- LH2 Background

- The concept is based on the principle that hydrogen losses can be eliminated if a refrigeration system is integrated into the storage tank (IRAS).
- Placing the cold heat exchanger in the liquid hydrogen allows for direct control over the liquid state.
- Oversizing the refrigerator allows for propellant densification and liquefaction.
- Lab scale operations (150 l) have been successfully demonstrated at Florida Solar Energy Center
- GODU LH2 will expand the scale and operations of the FSEC demonstration

GODU LH2 Objectives

- Demonstrate zero loss storage and transfer of LH2 at a large scale
- Demonstrate hydrogen liquefaction using close cycle helium refrigeration
- Demonstrate hydrogen densification in storage tank and loading of flight tank
- Also includes a number of secondary objectives including creating a densified hydrogen servicing capability, maintaining critical cryogenic design and operations skills, demonstrating low-helium usage operations, and validating modern component technologies

Specific Test Objectives

Objective	Operation	Current State of the Art	Full Success Criteria
Zero Loss Storage and Transfer			
Zero Boil Off Storage	Store LH2 in main storage tank	0.1% to 0.5% per day boil off	0% per day- No hydrogen venting in steady state storage operation
Zero Loss Tanker Offload	Transfer hydrogen from tanker to main storage tank	10% loss	0% loss - Offload 100% of tanker with no venting
Zero Loss Chill Down	Chill down transfer lines prior to operation	Varies by system mass	0% loss - Full recovery of all chill down vapor
Zero Loss Stop Flow	Leave transfer lines serviced between launch attempts	Lines drained and purged between launch attempts	0% loss - No hydrogen vented for two days during simulated scrub turnaround
Hydrogen Liquefaction			
In Situ Liquefaction in Main Storage Tank	Allow for local liquefaction inside storage tank	Hydrogen liquefied in New Orleans and trucked to KSC	50 gallons per day at 5% COP
Tank Pressure Control	Maintain positive pressure in tank during densification	Densification operations create subatmospheric pressure inside	15 psia with bulk liquid temp below 16K
Hydrogen Densification			
Storage Tank Densification	Use refrigeration to control state of bulk fluid in tank	Past densification systems used large quantities of hydrogen	Continuous densification inside storage tank with bulk fluid
Flight Tank Densification	Load simulated flight tank with densified hydrogen	None	Simulated tank loading with bulk fluid temperature of 17K

Functional Diagram

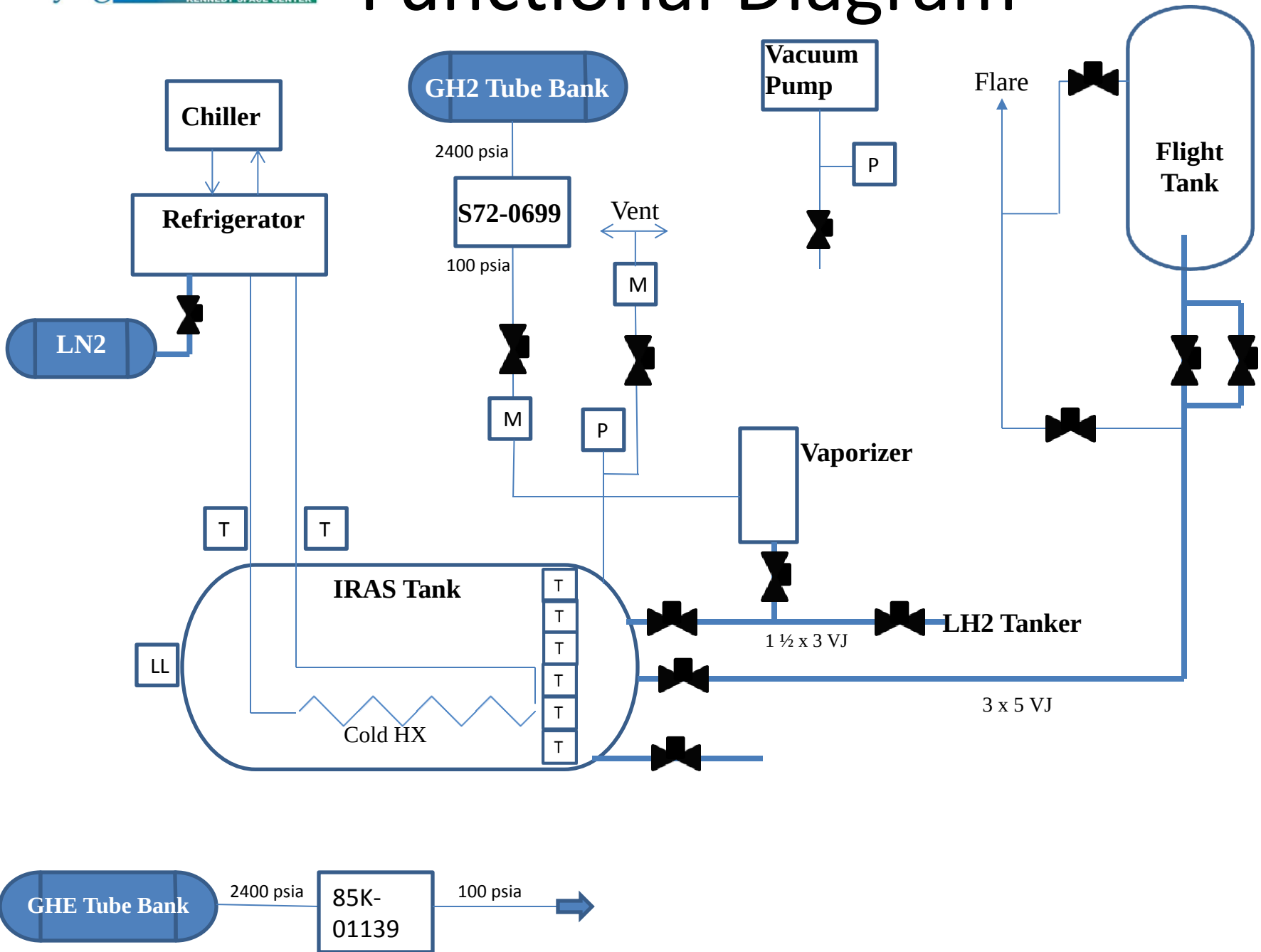

Refrigeration System

- Procurement of cryogenic refrigerator (Linde LR1620)
  - 850W at 20K with LN2 pre-cooling
  - 400W at 20K without LN2
  - 22.3 g/s cold helium flow to heat exchanger
- Procurement of commercial chiller units
- Integration into ISO container with vacuum pump, power and control electronics and hazardous area purge unit

Storage Tanks

- Integrated Refrigeration and Storage Tank
  - 33000 gal tank from Cx 41
  - Modify manway for helium and instrumentation feedthru
  - Internal stiffening rings for sub-atmospheric operation
  - Cold helium heat exchanger and supports
  - Three temperature rakes to measure vertical and horizontal temperature gradients
- Simulated Flight Tank
  - Space Act Agreement with ULA to use Cryote test tank
  - Used for final load demonstration with densified propellants
  - Testing pushed back until 2015

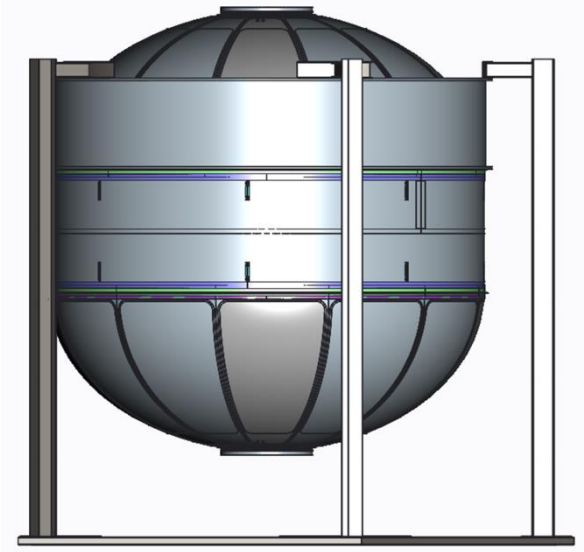

Fluid Transfer

- Vacuum jacketed transfer lines
  - Reuse 240’ existing 3” x 5” VJ lines from X-33 site
  - Procure new VJ lines to interfaces
  - Design/analyze piping support system

- Gaseous hydrogen vent system

- Gaseous hydrogen flare system
  - Refurbish existing X-33 flare stack
  - 8” dia vent pipe from simulated flight tank

- Liquid hydrogen vaporizers
  - Reuse from NASA Plumbrook K-Site

Test Site

- Site layout
  - Ground preparations (gravel, concrete)
- Access control
- Paging and area warning system
- Ground power modifications
- Pneumatics
  - Refurbish panels from LC-39, OPF, HMF
- Communication and video systems
- Process Safety Management

Current Status

- IRAS tank has been sited. Structural modifications completed and instrumentation is installed. Final HX sections are being installed in preparation for tank closeout.
- Refrigerator/chiller fabrication and mechanical installation complete. Electrical power feed is completed. Waiting on final helium interconnect/service tubing fabrication
- Hydrogen transfer and vent systems are installed and validation testing is complete.
- Pneumatic storage bottles and distribution panels are installed. Final tube mock up complete and tubing out for hydrostat test and cleaning.
- Command and control system are functionally complete in lab. Installation in the field is in work
- Instrumentation is installed and DAQ program is being written.


EMPTY
5823544

GODU LH2 Future Uses

- Upon completion of the GODU LH2 testing the system will be available for other uses.
  - Servicing on upper stages or test stands with densified hydrogen
  - Hydrogen distribution applications
  - Cryostat 900 and high efficiency transfer lines
  - Fuel cell and electrolysis research
  - Spacecraft loading ground support equipment
  - Superconductivity applications

Conclusions

- Current Kennedy Space Center cryogenic systems are outdated and operationally inefficient
- The GODU LH2 project will demonstrate the technology and operations needed to improve KSC LH2 systems
- The GODU LH2 test system will be operational near the end of 2014 – Intermediate test results to be published at Cryogenic Engineering Conference in Tuscon AZ in July 2015

? ? ?