Material Distribution Study of the Inner Tracker Upgrade

William A Burrus
Shih-Chieh Hsu & Lynn Marx
University of Washington
08.08.13

Upgrade Overview

- ATLAS upgrade
- Inner tracker upgrade
  - Phase I is ongoing until 2015
    - IBL+Pixel
  - Phase II on 2022
    - Full Silicon IT

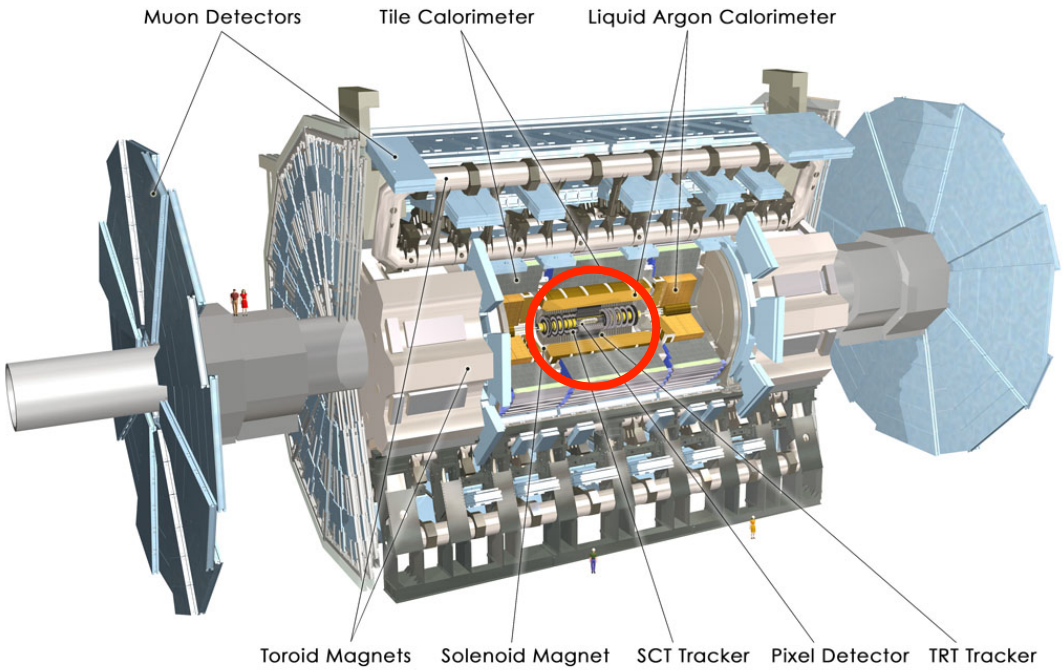

Phase I Upgrade

- Current pixel detector is subject to high levels of radiation damage
- Insertable B-Layer (IBL) is the first step in upgrading the pixel detector
- Will provide a very high precision set of measurements as close to the interaction point as possible

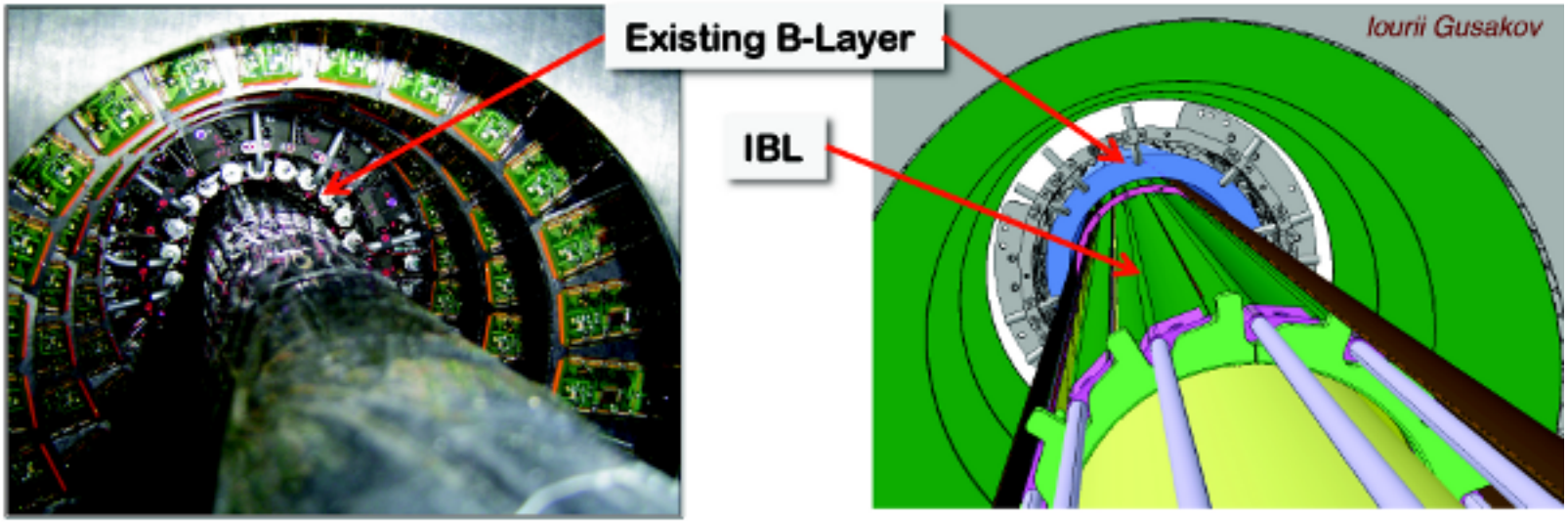

Parts of the IBL

Stave

- CarbonFoam
- CoolingPipe
- Omega

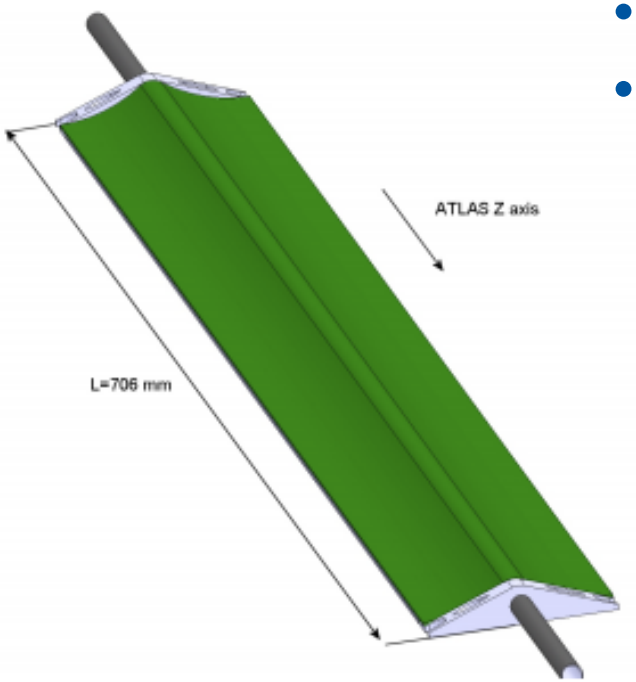

Stave

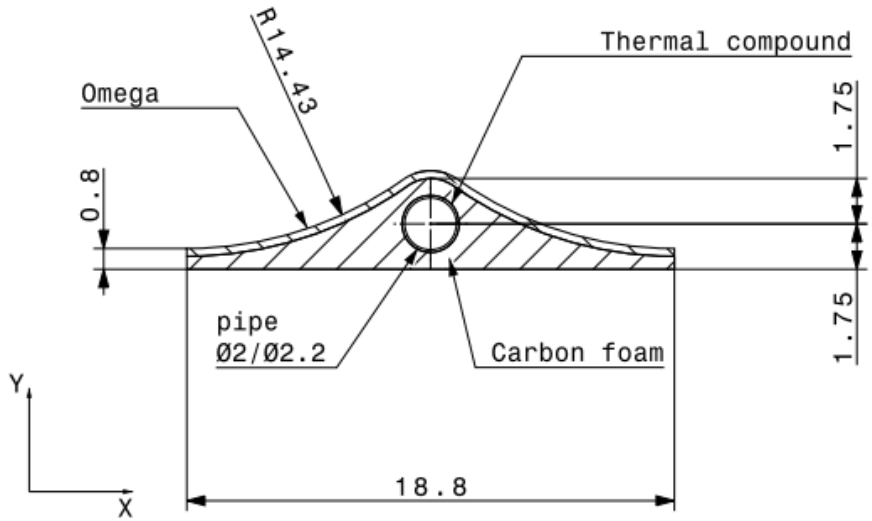

Cross section of a stave

Parts of the IBL

- Flex
  - Flex cable runs along the back side of the stave
- Sensor
  - Sensors are bonded onto the frontend chips
- Chip

Cross section of half of a stave

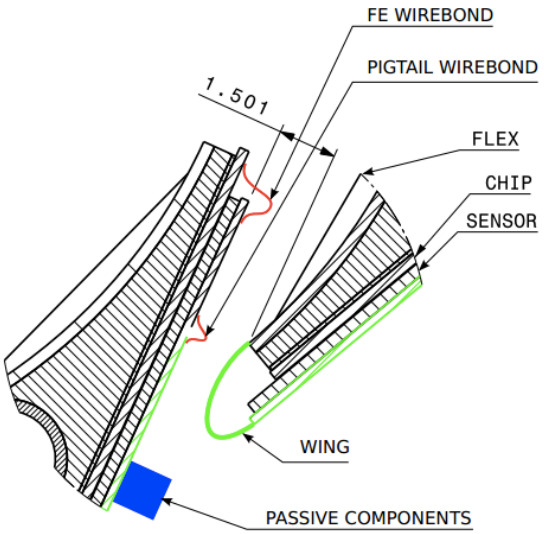

Flex

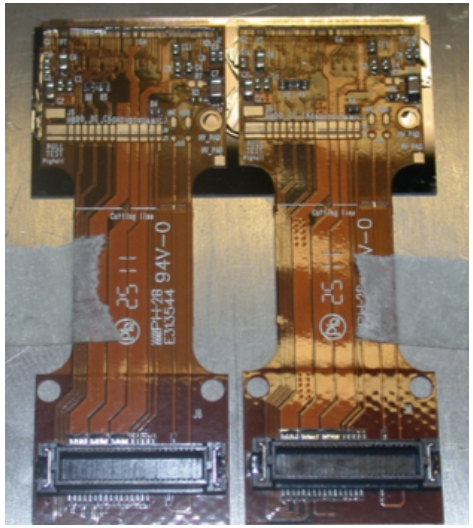

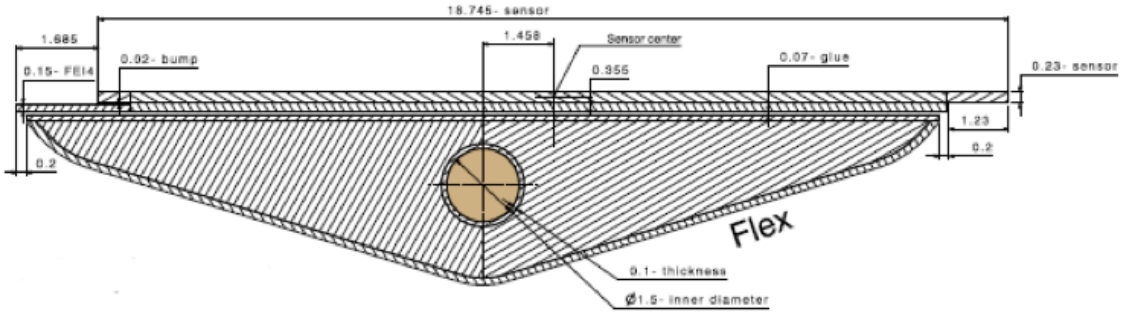

Cross section of an IBL stave

Material Distribution of the IBL

- Graph of pseudorapidity (η) vs radiation length (X_0)
- η
  - Describes angle of particle relative to the beam axis

$$\eta = -\ln\left[\tan\left(\frac{\theta}{2}\right)\right]$$

  - θ is the angle between the particle momentum and the beam axis
- X_0
  - Characteristic of a material
  - Related to the loss of high energy

$$Xo = \frac{716.4}{Z(Z+1)\ln\frac{287}{\sqrt{Z}}}\ g.cm^{-3}$$

- My graph uses the most recently updated IBL information

TDR-019

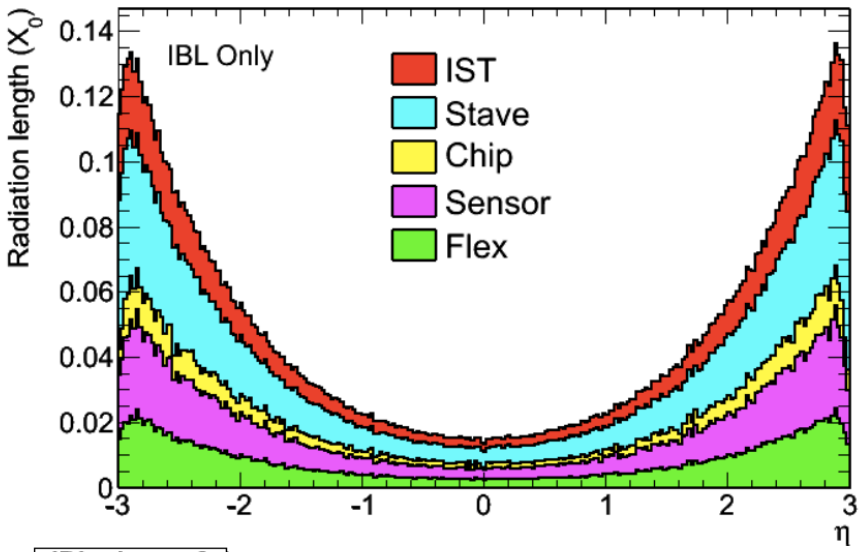

My Graph

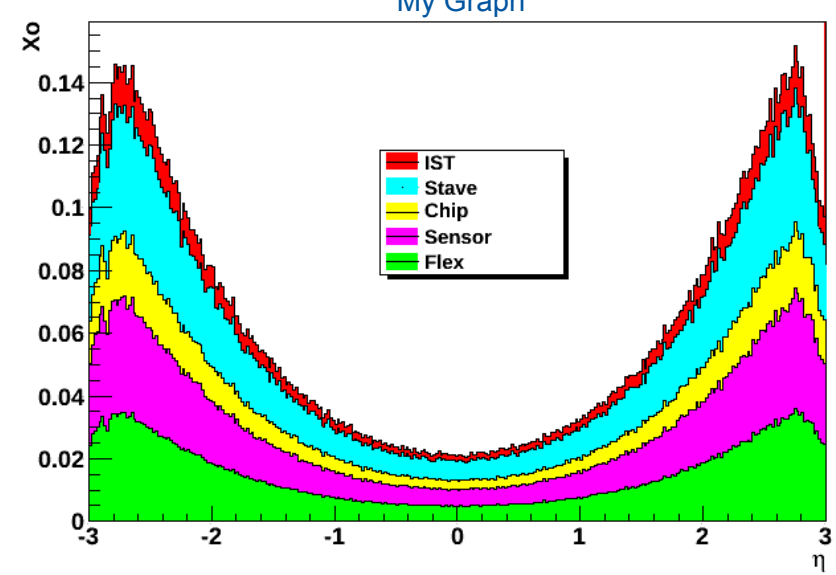

Phase II Upgrade

- Consequence of increased luminosity and accumulated radiation damage
- Will take place in 2022
- Full silicon inner tracker
- Many different layouts are being considered

LOI vs Conical

Red Pixel
Blue Silicon Micro-Strip
Horizontal lines – Barrel Layers
Vertical lines | Endcap disks
Bottom grey line Beam pipe
Middle grey line Inner support tube
Top grey line Pixel support tube

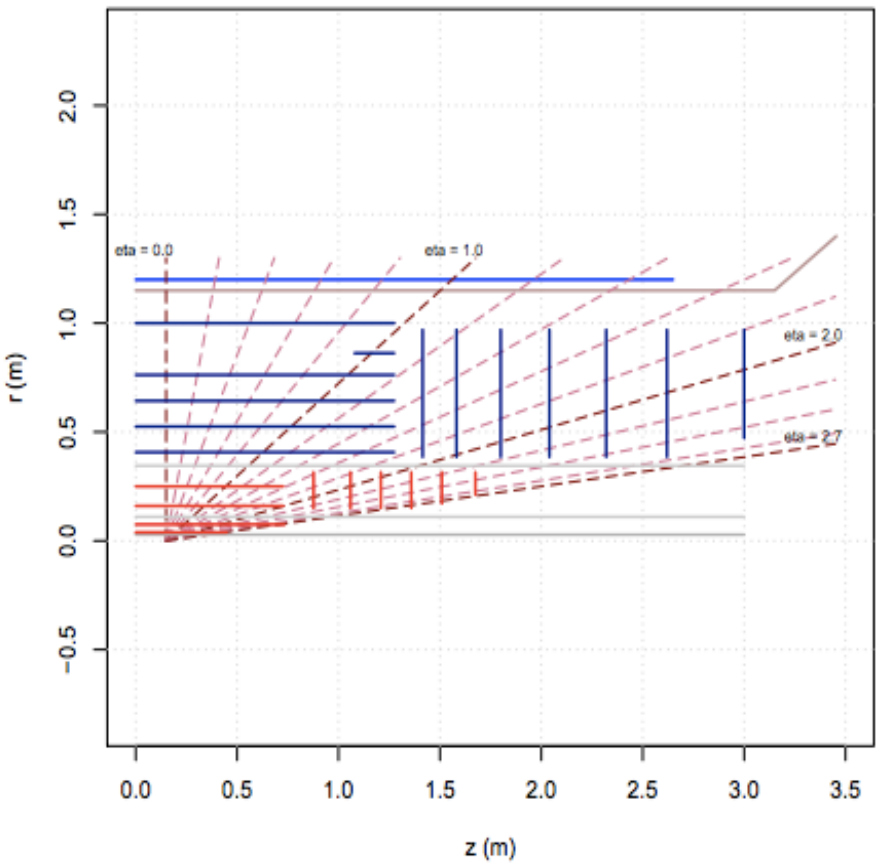

LOI Layout

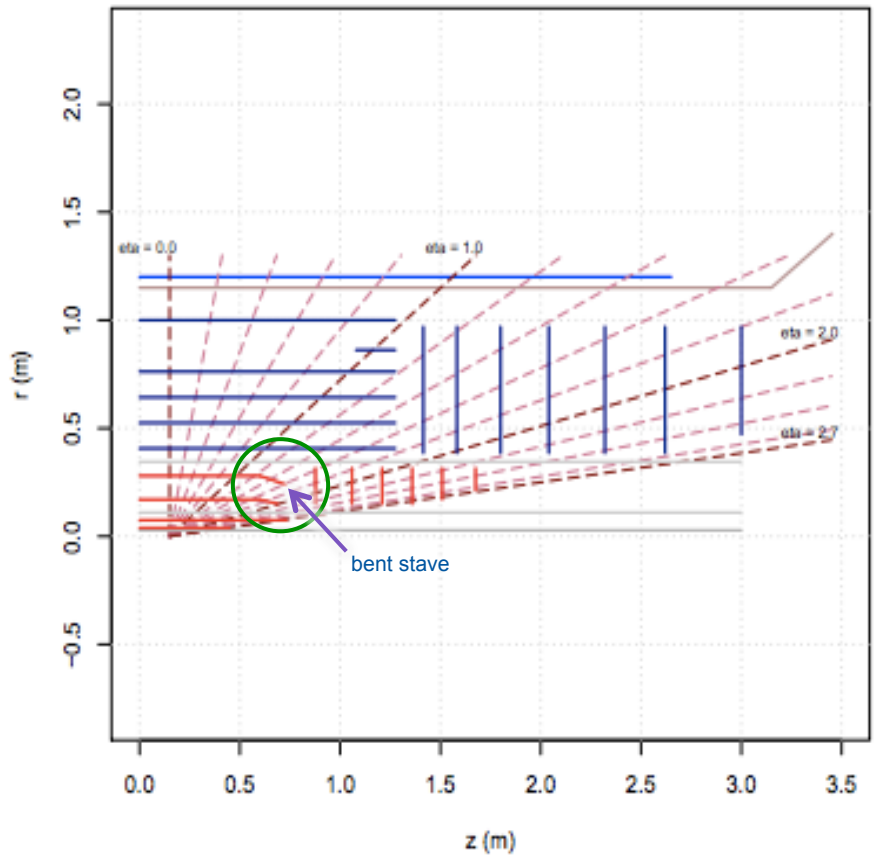

Conical A Layout

Conical A vs Conical C

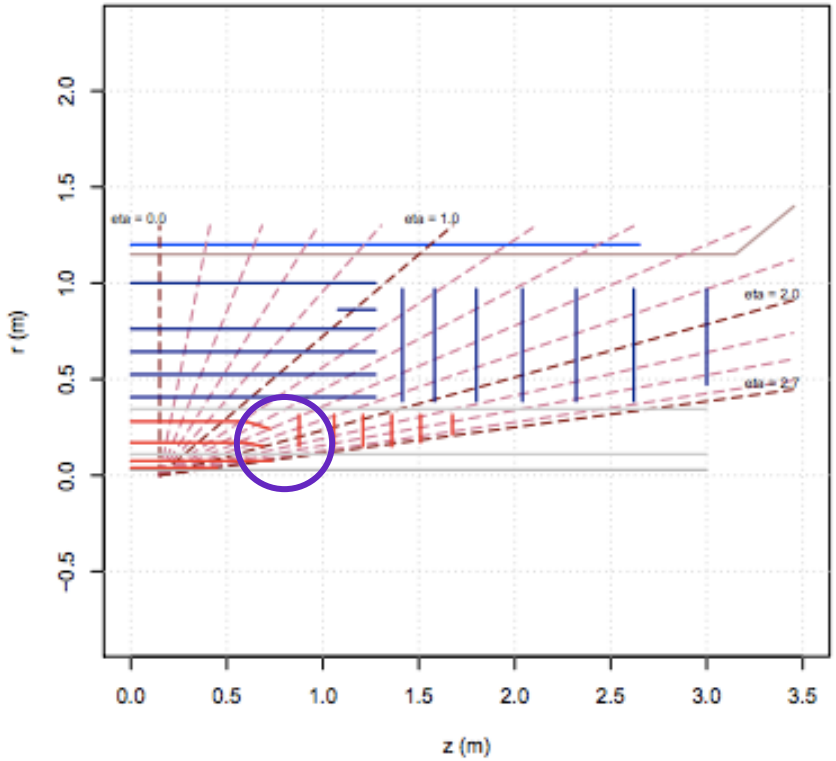

Conical A - two outer barrel layers placed equidistant between inner pixel and strip layers

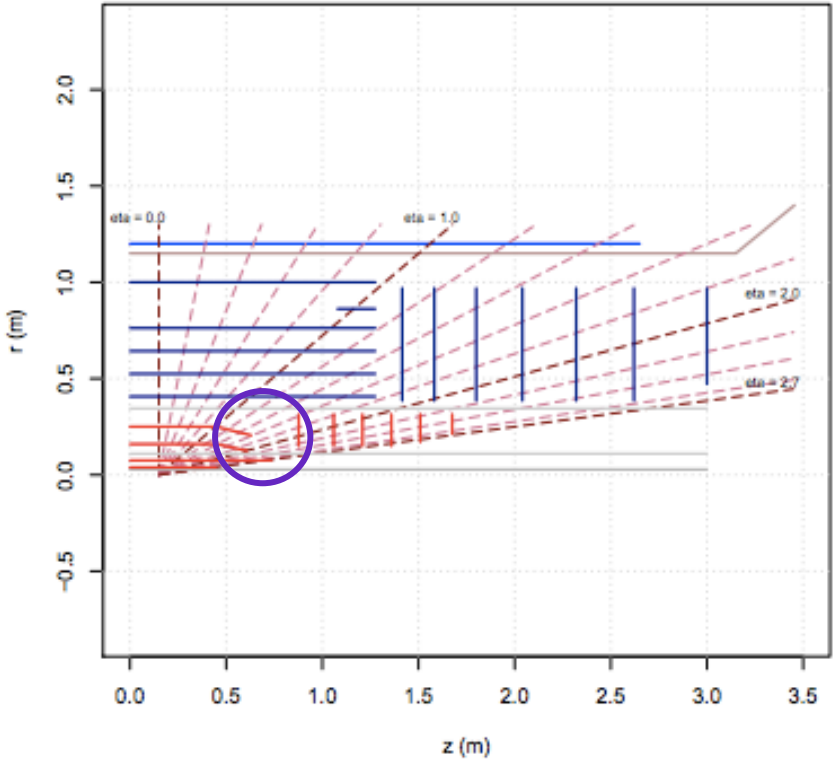

Conical C - two outer barrel layers left at the same radii but shortened to reduce the silicon area

Conical A vs LOI

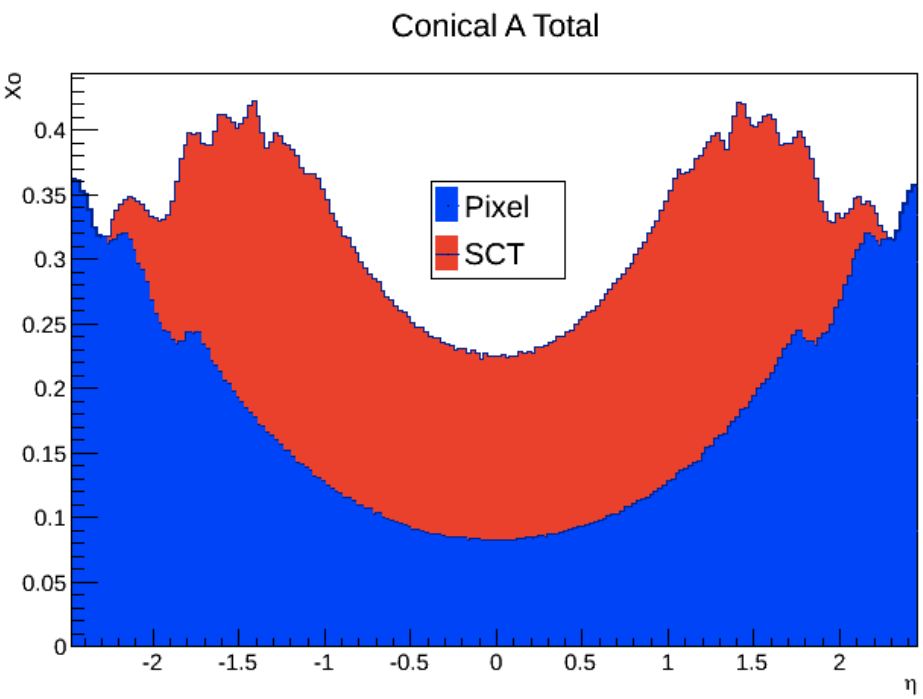

Total material distribution for the Conical A layout

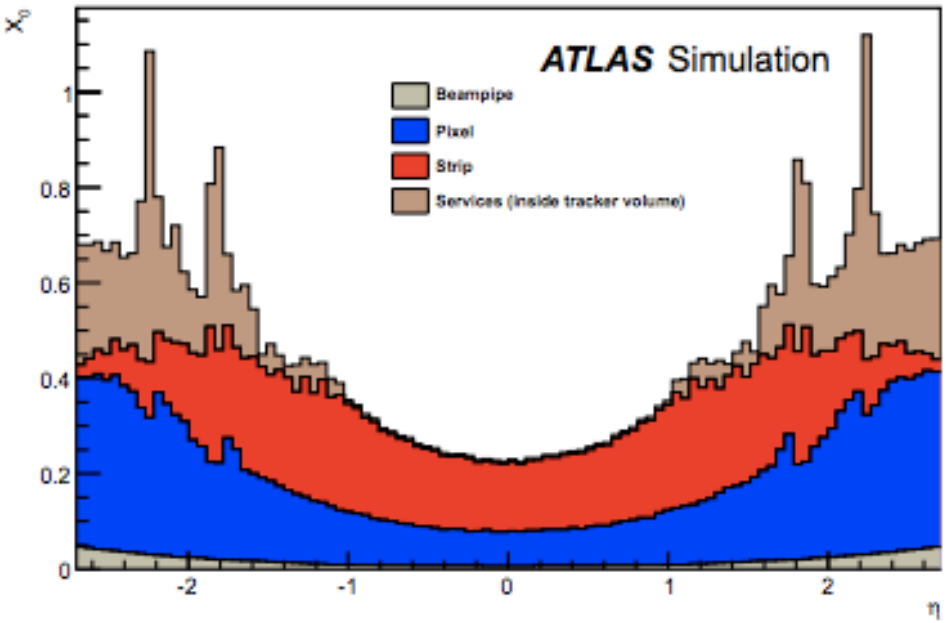

Total material distribution for the LOI layout

- LOI material distribution is from the ATLAS document LHCC-I-023
  - Letter of Intent for the Phase II Upgrade
- Services weren't included for the Conical A layout
- Conical A seems to have a considerable advantage over the LOI

Summary

- Completed
  - Familiarity with Linux/C++/ROOT
  - Reproduction of TDR-019 study
  - Radiation length calculation for IBL layout
  - Radiation length calculation for Conical A layout
- Acknowledgements
  - NSF, UW Group, UMich Group, CERN Summer Student Program
  - Jean Krisch, Homer Neal, Steven Goldfarb, Junjie Zhu, Jennifer Roloff, Lynn Marx, Shih-Chieh Hsu, Summer Students


BARCELONA City
HSBC

Backup Slides

Conical Layout

- Based on integrated staves structures with a flat middle section and bent ends known as bent staves
- Pros
  - Integrated staves help to reduce mass & front-load integration effort
  - No need to individually cable each module
  - End of Stave (EOS) cards can serve a group of modules with small services as opposed to each module having its own service
- Cons
  - Drawback is that the EOS cards must take up physical space at the end of the stave
  - Bent stave increases the physical distance from the last active pixel on a stave to the first active pixel on the corresponding endcap

Conical A

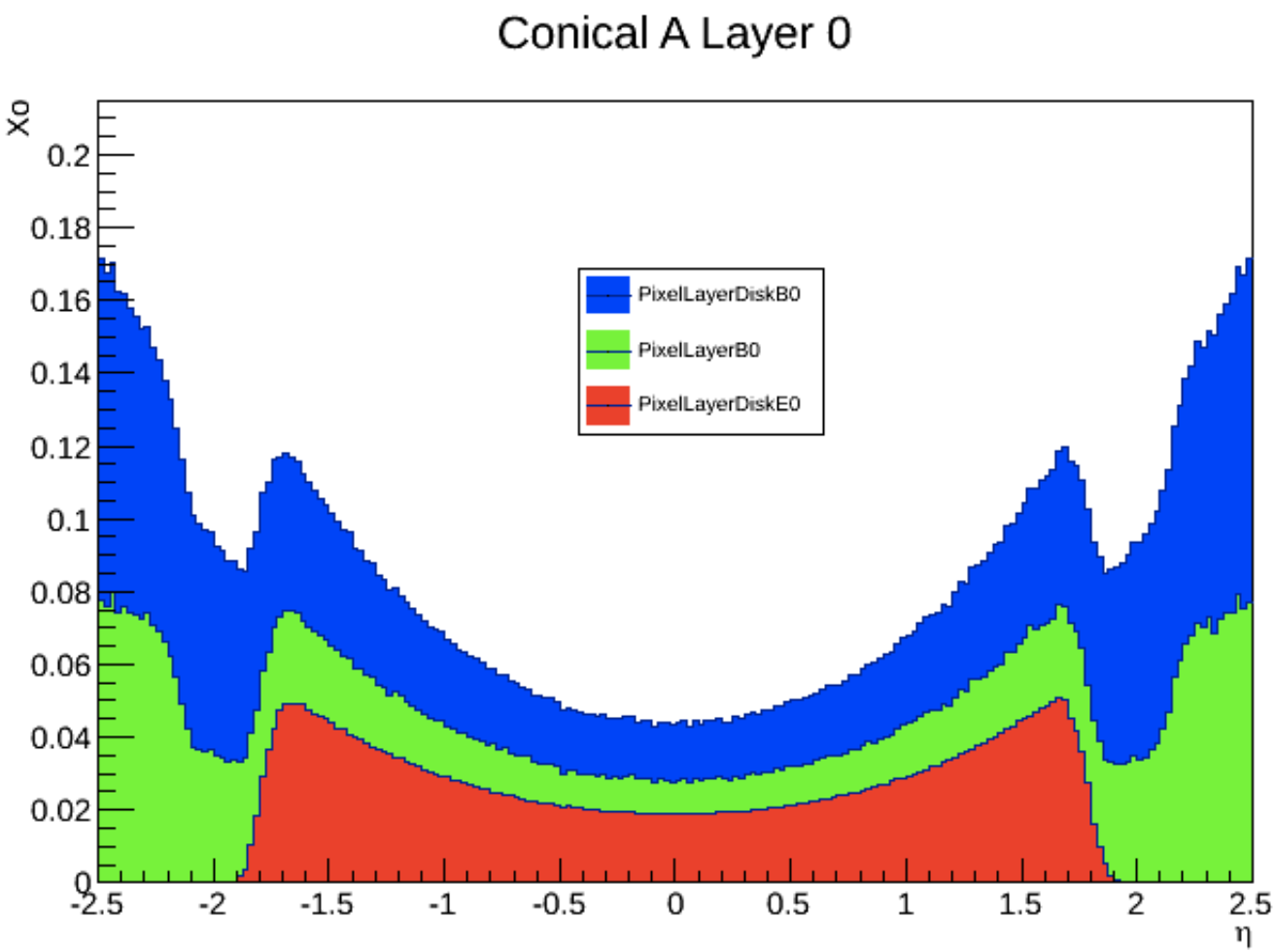

Material distribution for layer 0 of the Conical A layout

Conical A

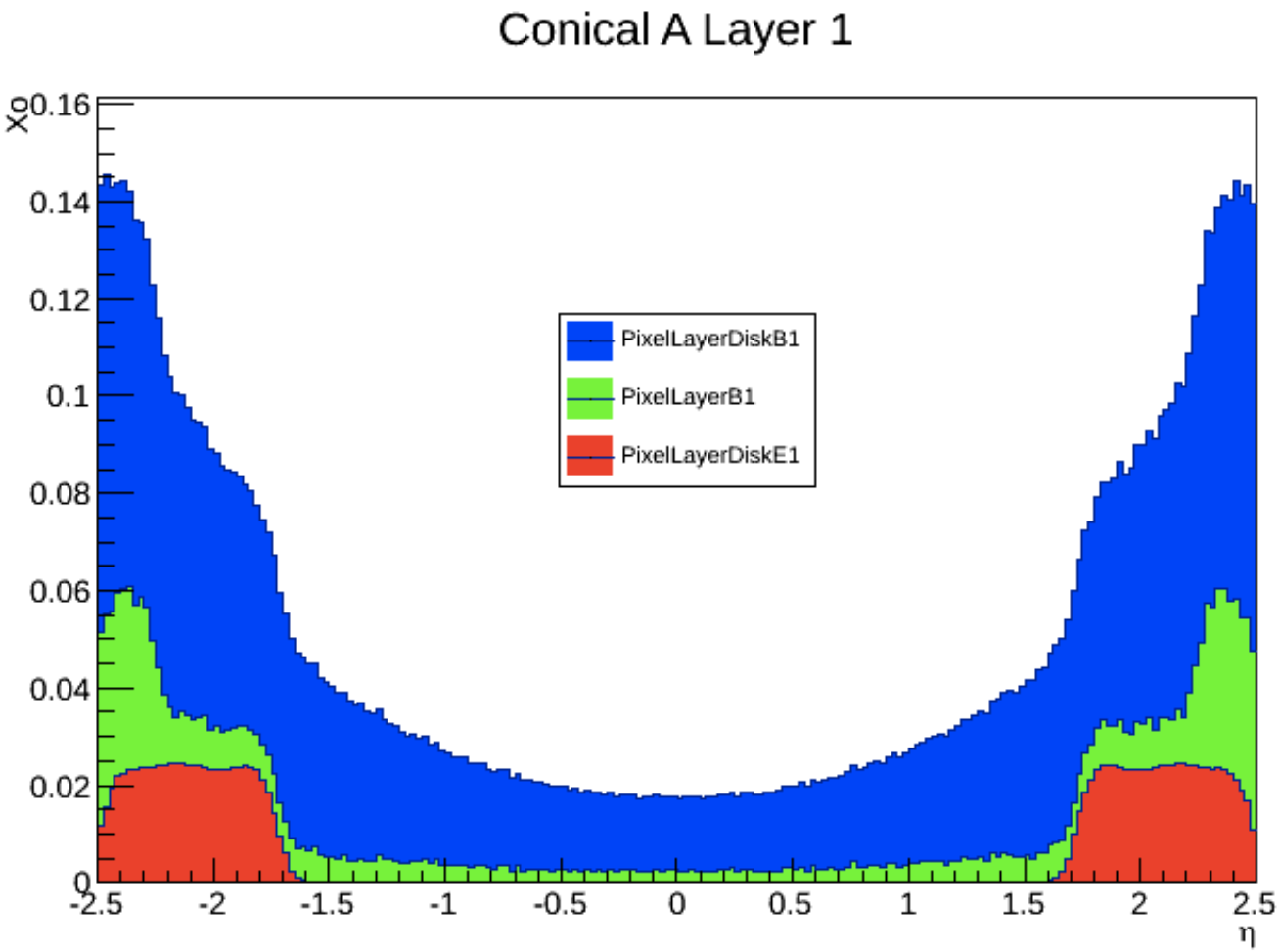

Material distribution for layer 1 of the Conical A layout

Conical A

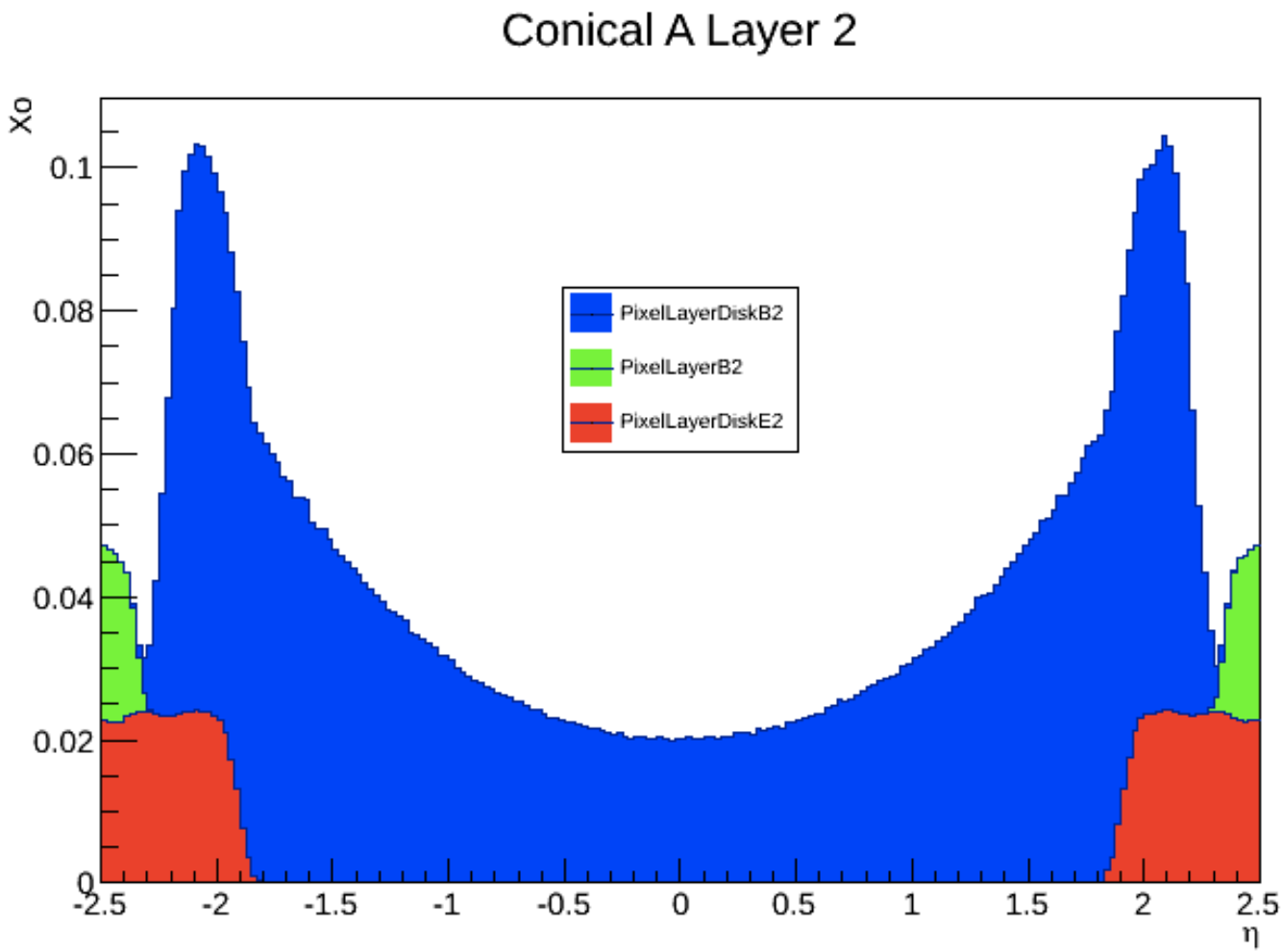

Material distribution for layer 2 of the Conical A layout

Conical A vs IBL

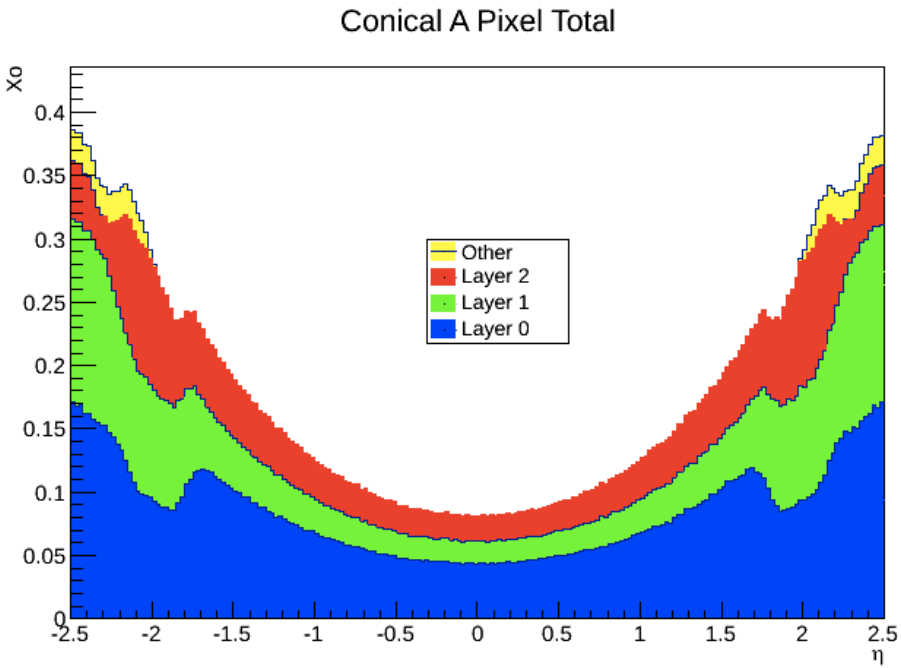

Total material distribution for the Pixel Detector of the Conical A layout

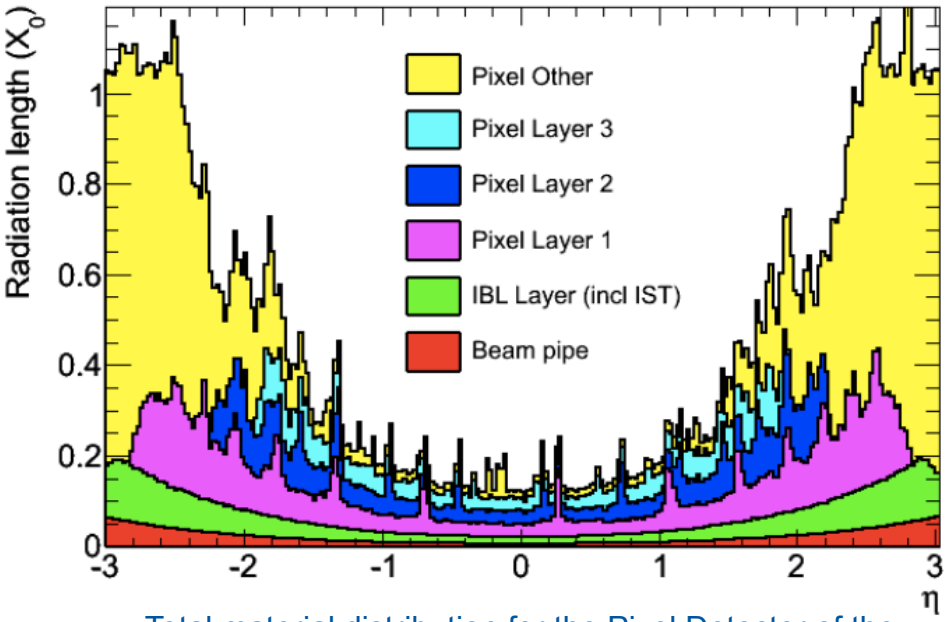

Total material distribution for the Pixel Detector of the IBL layout

- IBL material distribution is from the ATLAS-TDR-019 document
  - Technical Design Report for the IBL
- Services weren't included for the pixel layers in the Conical A layout code
- The pixel layers are still comparable
- Conical A layout seems to be slightly better than the IBL layout

CERN

www.cern.ch