LHC Crab Cavity

HOM Coupler Optimization & RF Modeling

Zenghai Li
SLAC National Accelerator Laboratory

LHC-CC13
CERN, December 9-11, 2013

Outline

RF Dipole Cavity (SLAC-ODU design)

- HOM coupler - damping
- Ridged HOM coupler SC-NC transition - wall loss on NC section
- Tolerances – dipole pole tilt and offset

DQW Cavity Simulation (BNL design)

- Coupler port design comparison
- HOM coupler RF and MP evaluation – in progress

RF Dipole

- Shape: square cavity with double ridge deflecting poles
- Operating mode: TE11 like
- Curved pole surface to minimize amplitude of multipole fields
- Compact size, suitable for both vertical and horizontal crabbing schemes

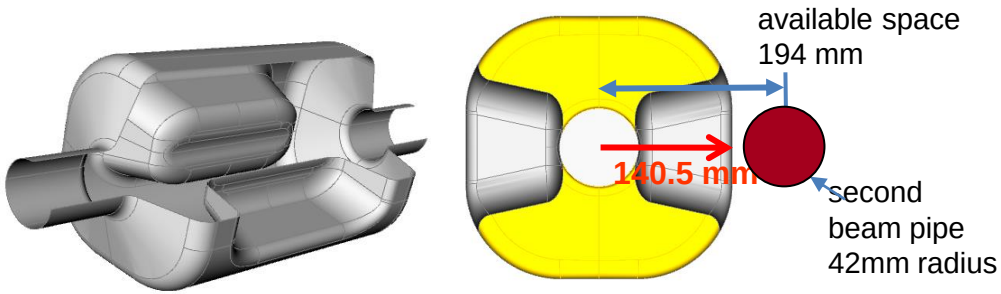

RF dipole cavity & curved pole surface

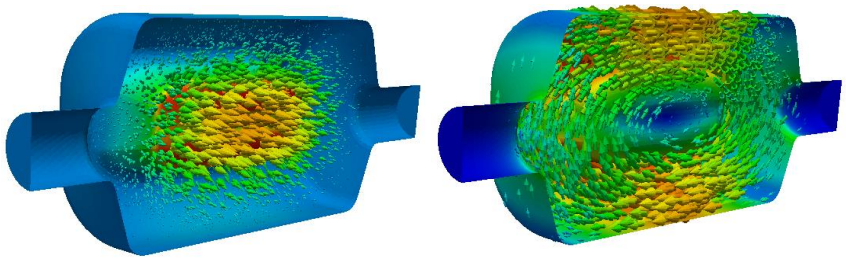

TE11 like Electric and Magnetic fields

Frequency (MHz)	400
Operating Mode	TE11
Lowest dipole HOM (MHz)	633
Lowest acc HOM	715
Iris aperture (diameter) (mm)	84
Transverse dimension (mm)	281
Vertical dimension (mm)	281
Longitudinal dimension (w/o couplers) (mm)	556
R_T (ohm/cavity)	433
V_T (MV/cavity)	3.34
Bs (mT)	55.6
Es (MV/m)	33.4

RFD Cavity HOM Damping – 2013-04 Version

- Vertical dipole coupler off center - space for second beam pipe if needed, coupling to higher multipoles
- Dent on wg-stub wall to enhance coupling

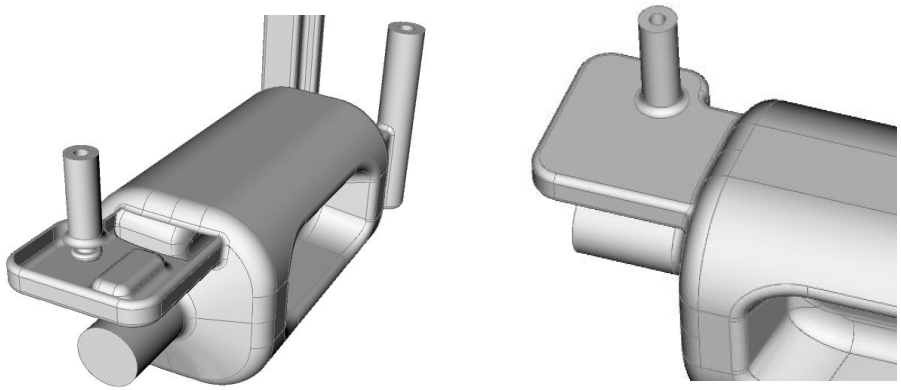

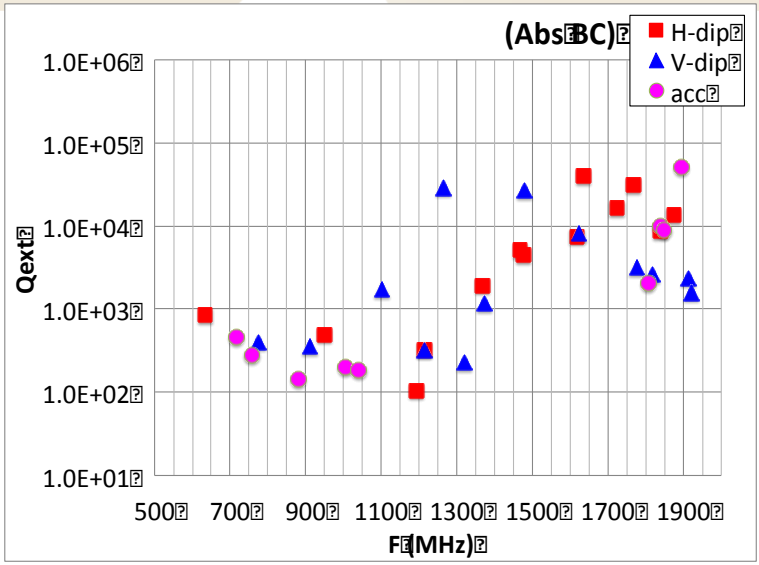

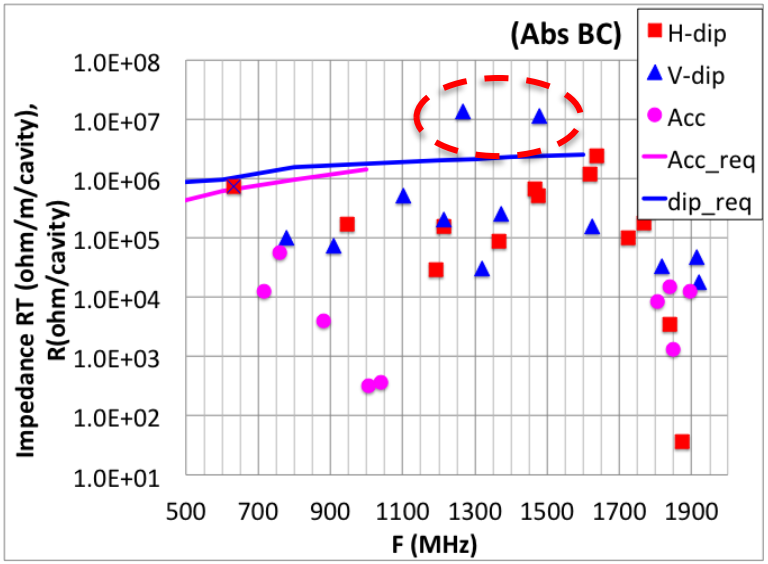

all modes except two vertical modes at 1.265 and 1.479 GHz were well damped

RFD Cavity – Modifications to HOM Couplers

- Horizontal HOM coupler – moved up the starting position of the ridged gap
- Vertical HOM Coupler – simplified & smaller wg stub, pickup coax moved toward the symmetry plane

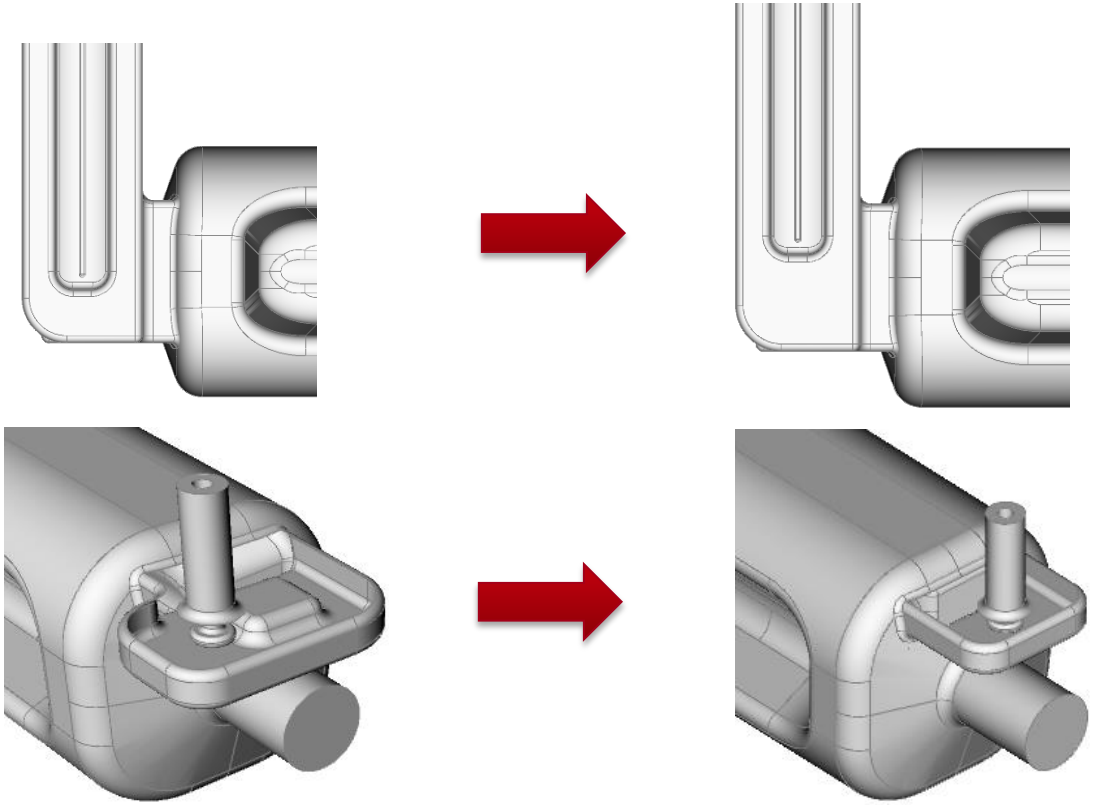

Older design

Improved design

HOM Couplers Tuned to Damp the Whole Spectrum

- An example of damping response of individual modes to coupler modifications
- Tune to damp the whole spectrum

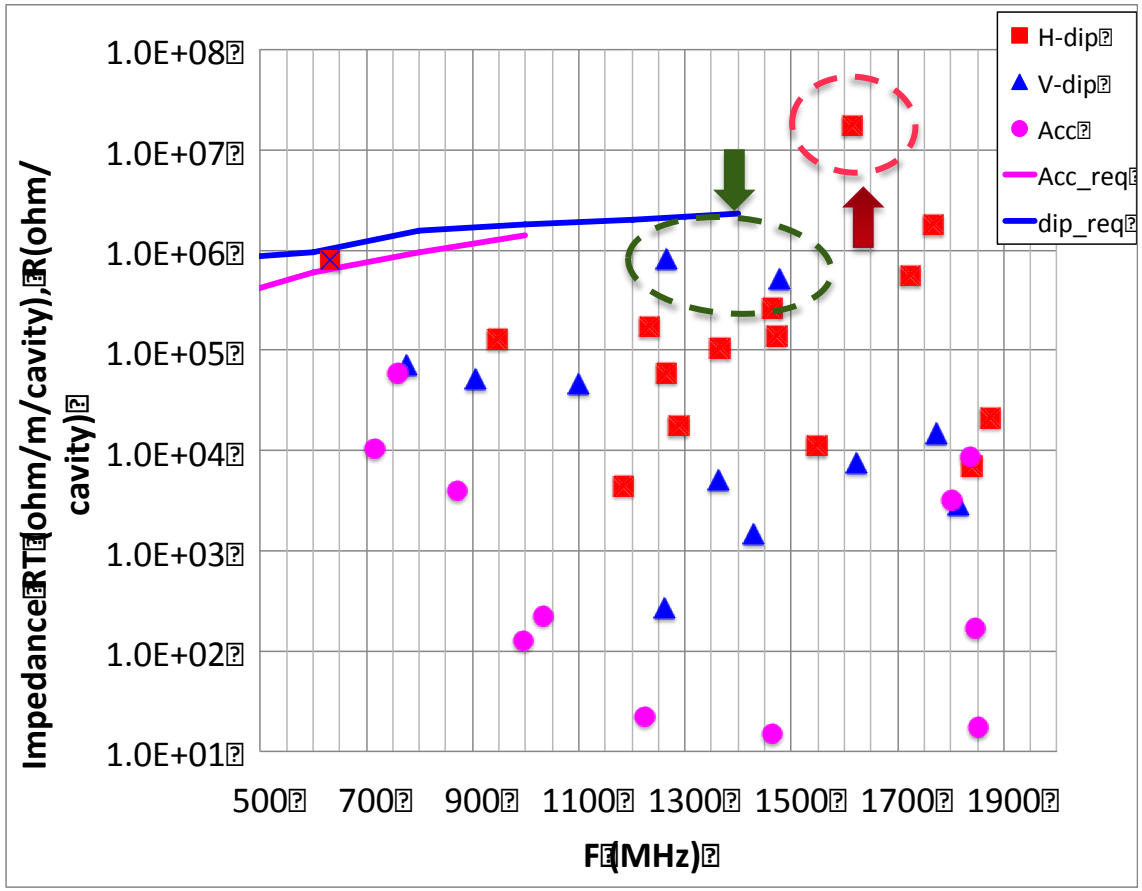

RFD Cavity – HOM Damping with Improved HOM Couplers

Good Damping achieved up to 2 GHz for all modes

- Qext of modes at 1.265 and 1.479 GHz lowered by more than a factor of 10
- Other modes remain well damped

➢ Engineering design for the SPS test cavity

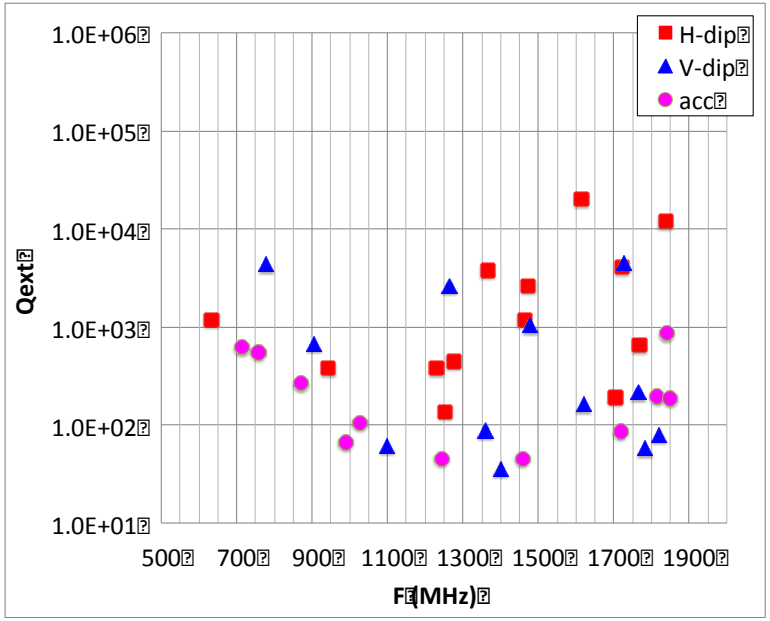

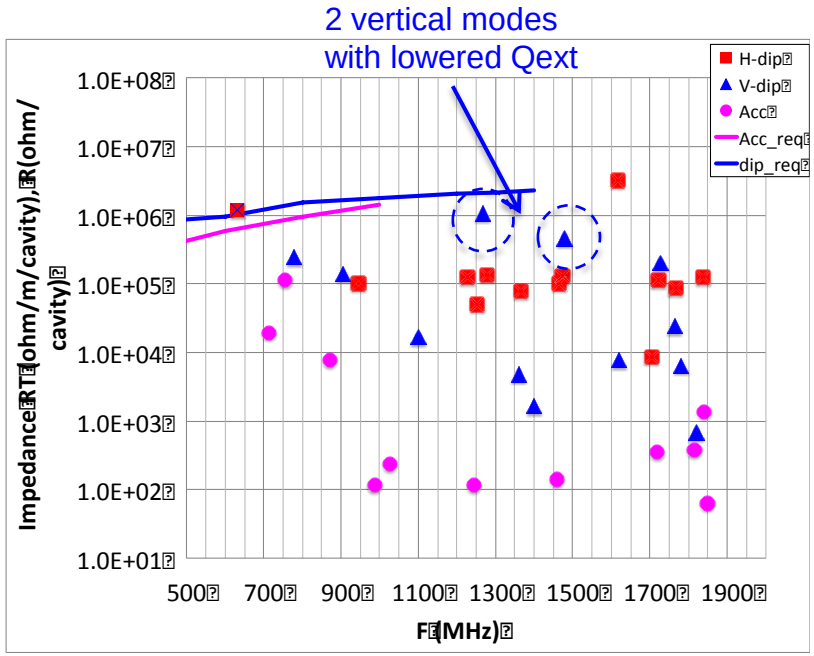

FPC Coupler

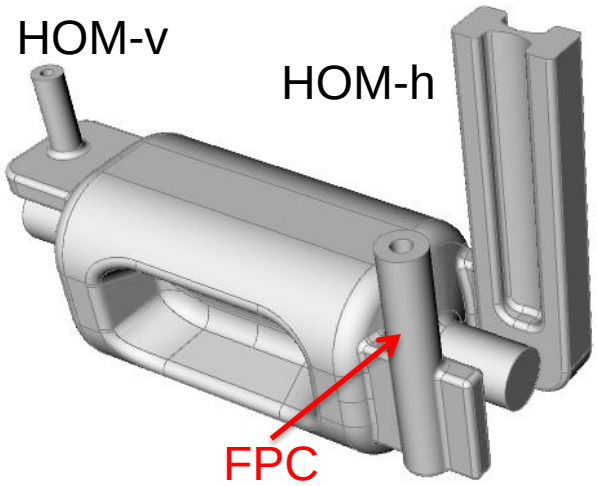

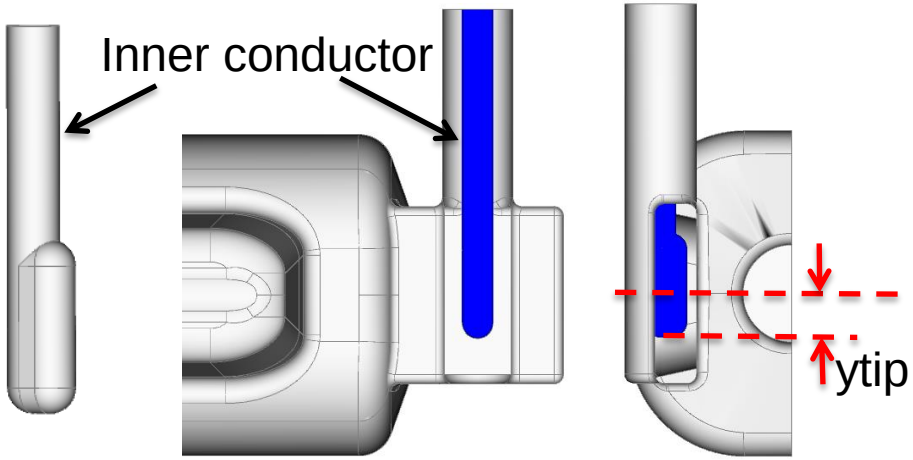

- Outer diameter: 62 mm
- Inner diameter: 27 mm

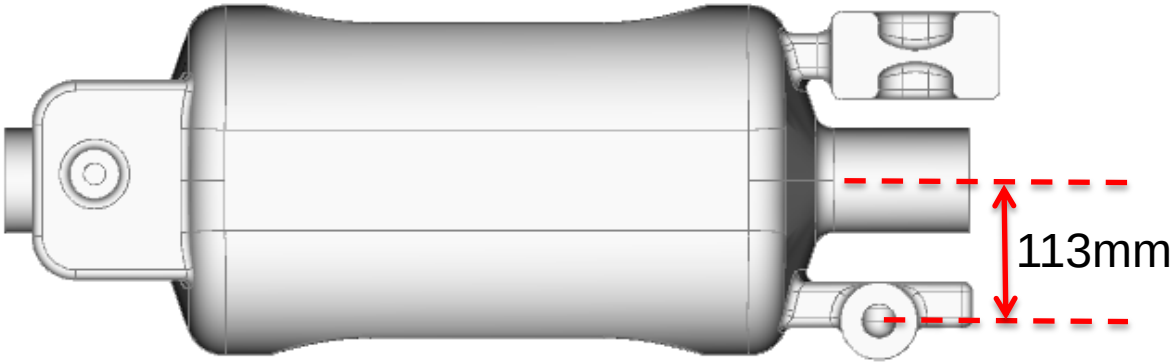

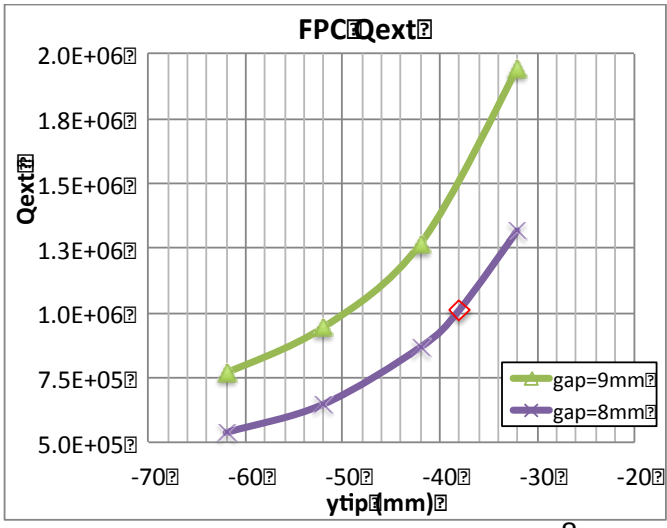

FPC Coupler Antenna

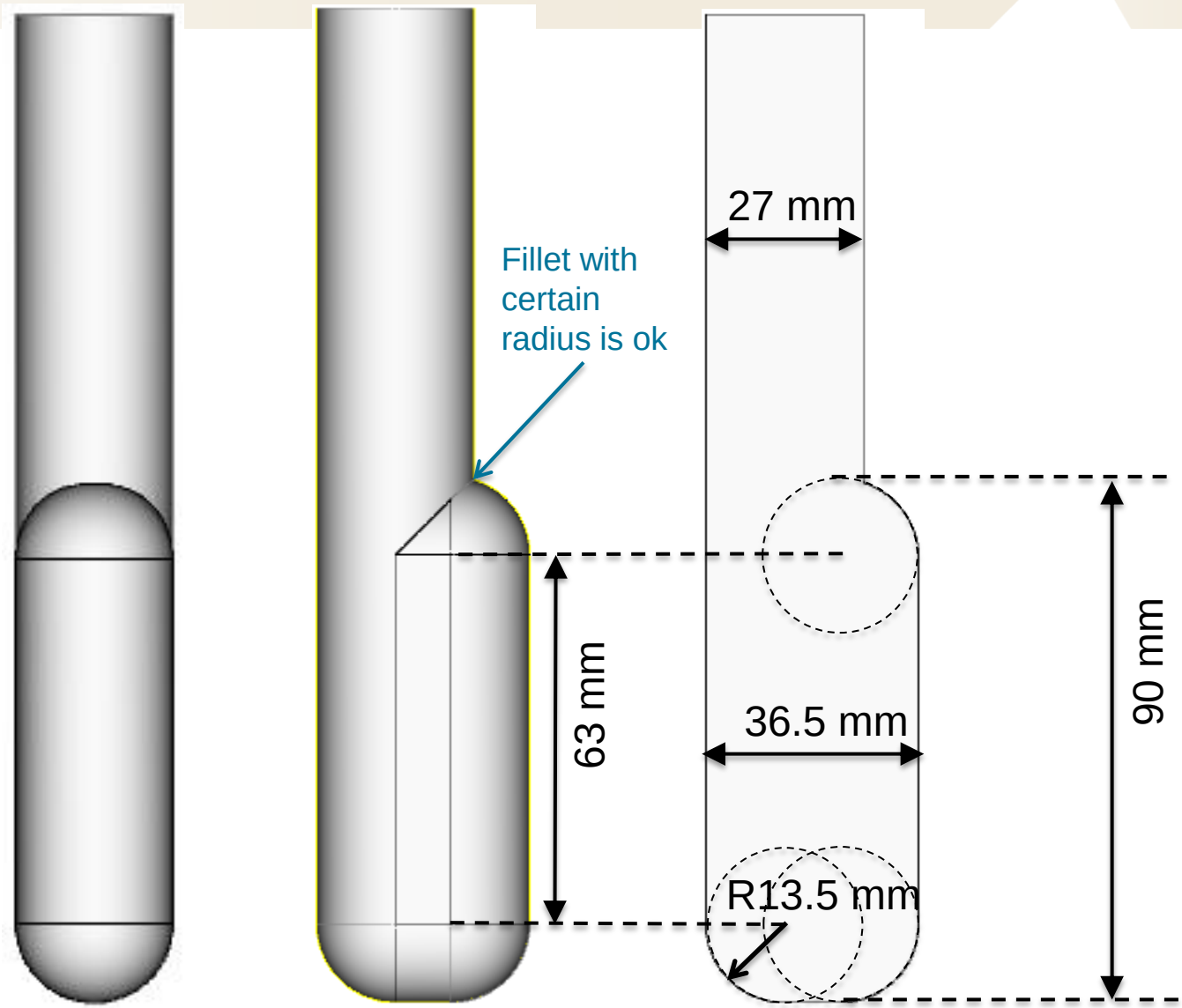

Wall Loss in NC WG Section vs Position of SC to NC Transition

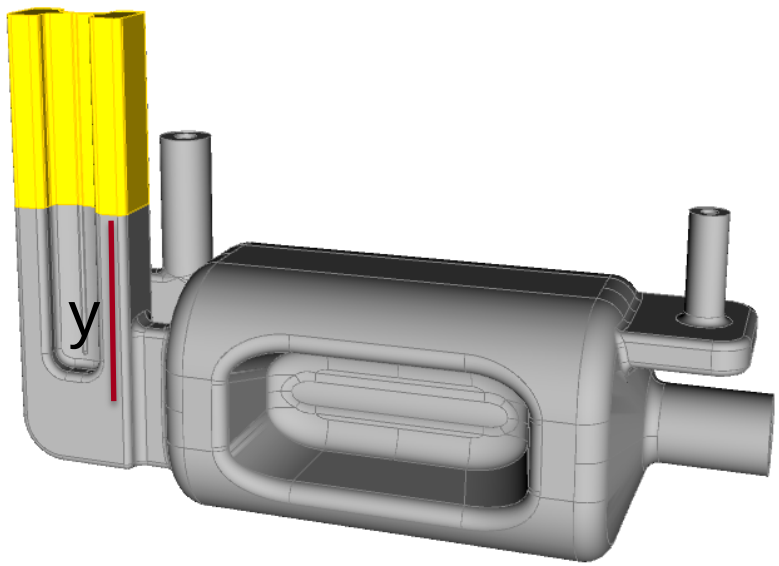

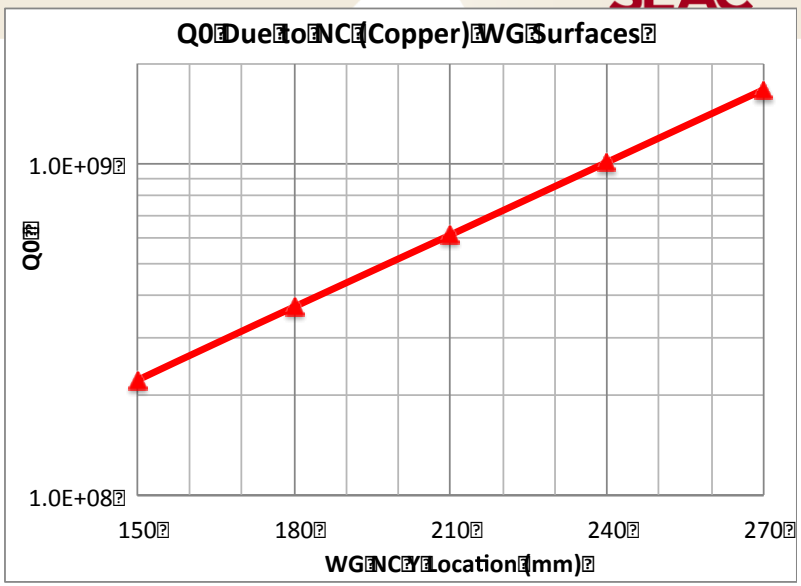

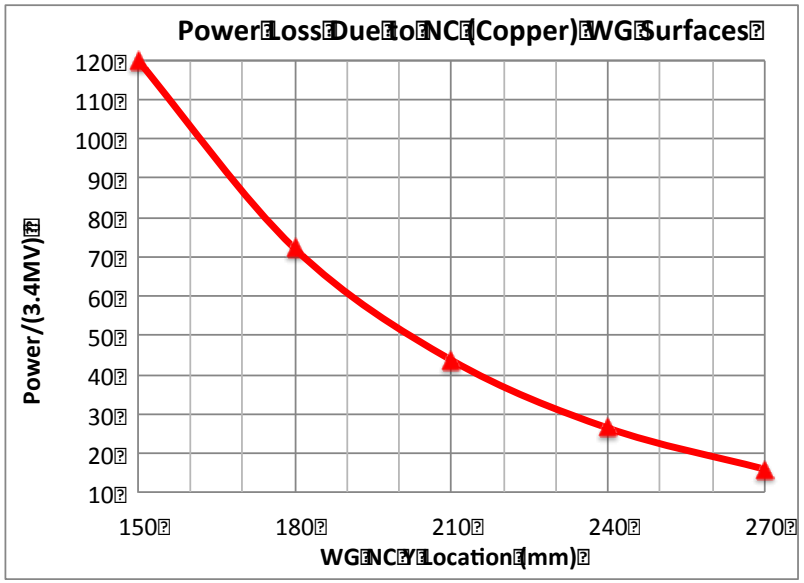

- Evanescent field in horizontal HOM coupler causes residual power loss to the NC portion of the waveguide

➢ Flange location, gasket heating, cooling, etc.

Effect of Dipole Pole Tilt and Position Offset

xoffset

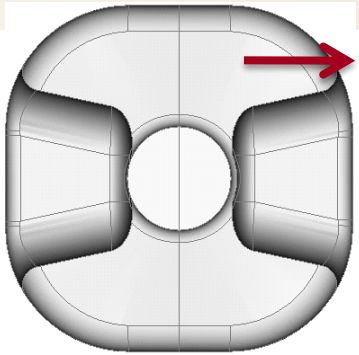

yoffset

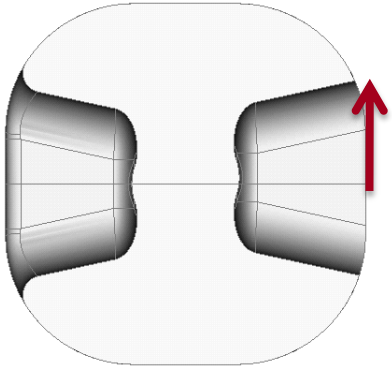

zoffset

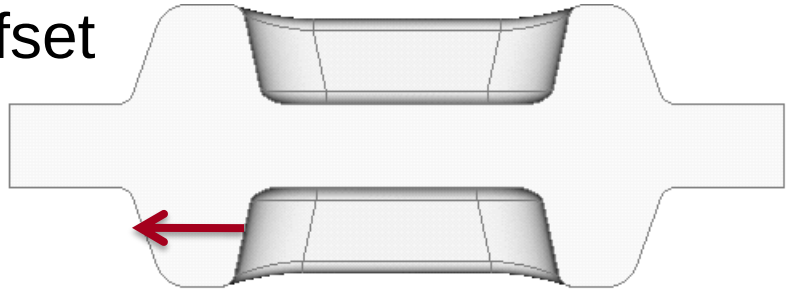

Xtilt

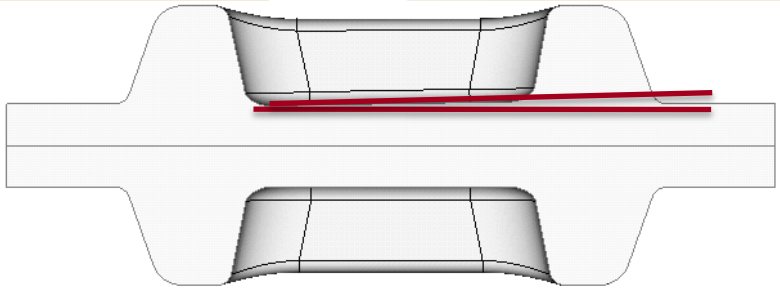

ytilt

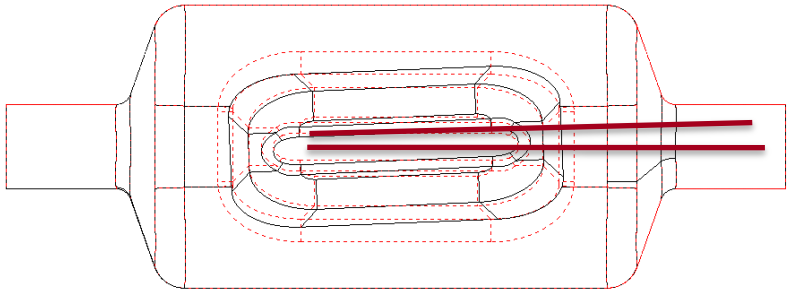

zrotate

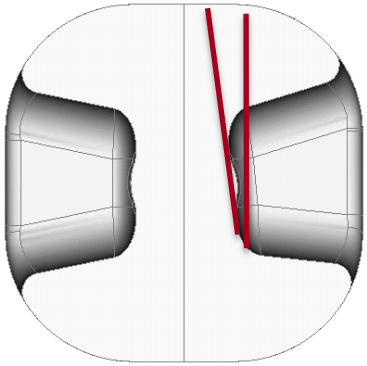

The effects are mostly on the multipole fields

Multipole Field with a Tilted/Offset Pole

	xcenter off (mm)	Vy/Vx	B3 (mT*m)/m^2	B5 (mT*m)/m^4	B7 (mT*m)/m^6	B3 Skew	B5 Skew
xtilt 0.5 deg	0.73		492	2.2E+06	7.8E+08		5.4E+03
ytilt 0.5 deg	0.10	2.2E-03	489	2.3E+06	7.5E+08	49	5.5E+04
zrot 1 deg	0.10	7.9E-03	494	2.2E+06	7.0E+08	136	5.7E+03
xoff 2mm	1.55		677	2.1E+06	7.3E+08		1.6E+04
yoff 2mm	0.09	2.2E-03	536	2.2E+06	6.9E+08	311	2.1E+05
zoff 2mm	0.44		509	2.3E+06	7.2E+08	13	3.8E+04

**More accuracy need for the B7 term

DQW: RF Comparison of Three Port Designs

- Three port designs with different rounding profiles at the cavity-coupler interface analyzed
- Compared RF and surfaces fields of three designs for the final choice for DQW cavity

V_def/cavity: 3.34 MV			
	RC	Simple	Slope
R/Q (ohm)	426	428	428
Es (MV/m)	38.8	39.6	38.1
Bs (mT)	69.8	69.3	89.7
dCenter (mm)	0.62	0.51	0.53

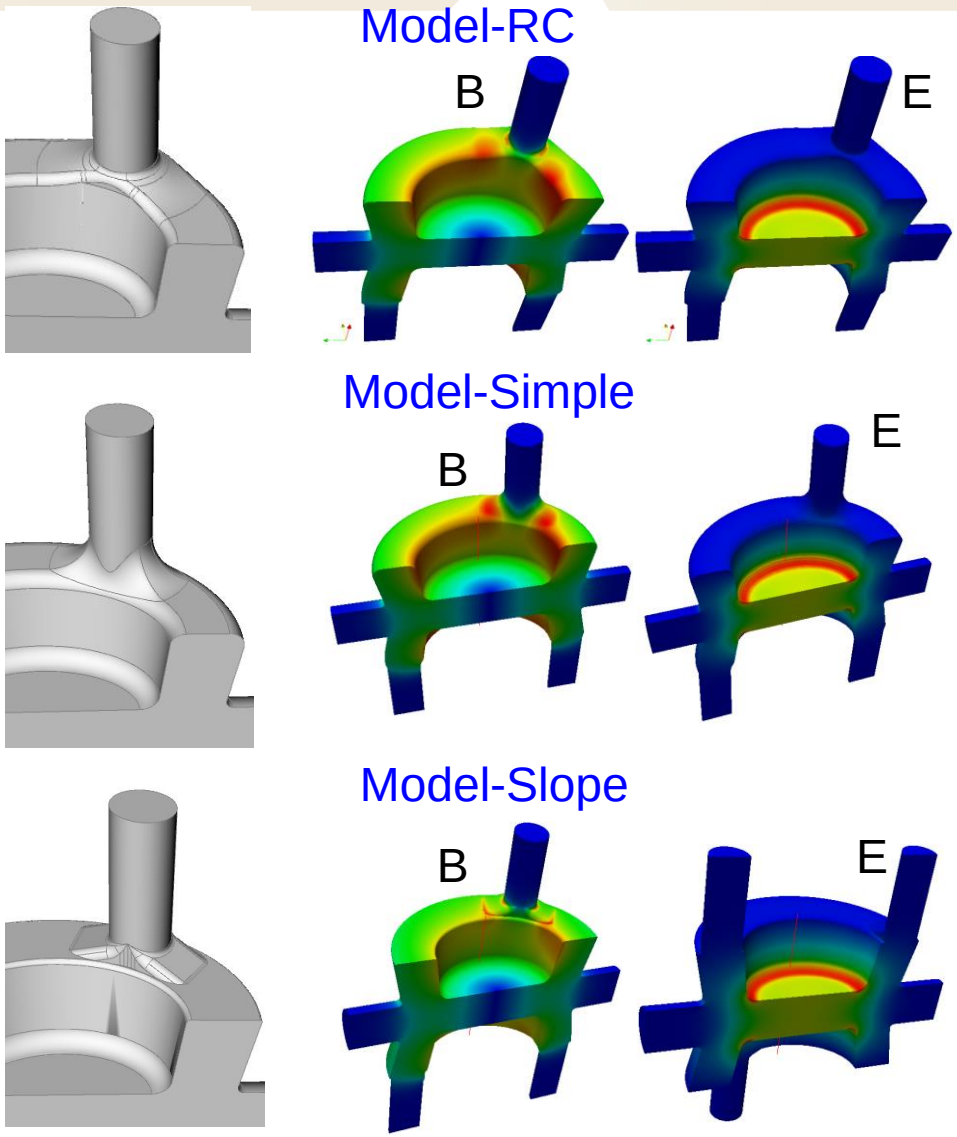

DQW Cavity With HOM & FPC couplers

In the process meshing with CUBIT – need to fix some small (artificial) features

- Other codes seem more tolerate to small (artificial) curves and surfaces, etc
- CUBIT is picky, hopefully can generate better mesh for good field quantities

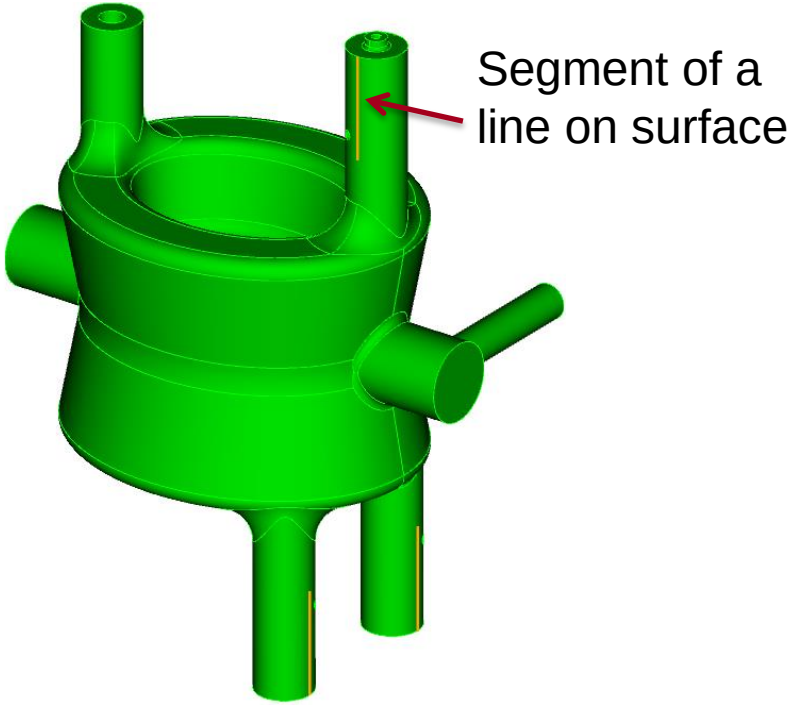

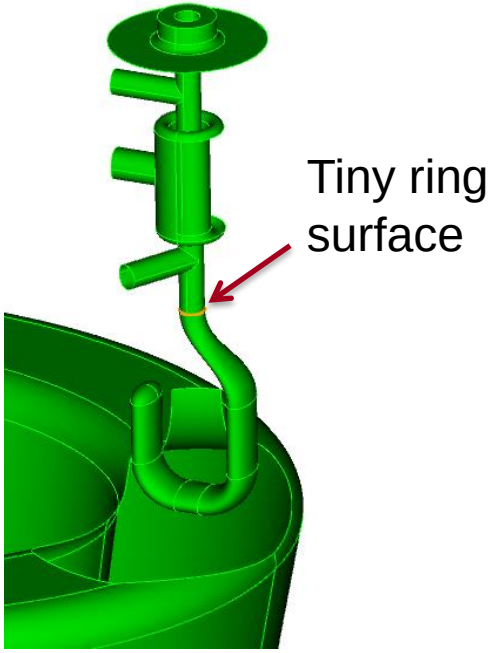

To do:

- Evaluate RF parameters and HOM damping
- Analyze multipacting in HOM couplers

HOM Loads

- Broad band HOM windows
  - waveguide
  - coax
- Broad band loads
- Interface components