EN Engineering Department

LHC-CC13 Crab Cavity Workshop

Cavity III (DQW) Prototype Cryomodule:

First design integration studies for SPS

Luís ALBERTY on behalf of the MME Design Office Team:
O. Capatina, F. Carra, G. Foffano, N. Kuder, R. Leuxe, T. Renaglia

Geneva, 9-11 December 2013

Outline

- Quarter-wave cavity
- The SPS Integration
- First cryomodule design
- Helium vessel design
- Cryomodule assembly
- Conclusions & outlook

Quarter-wave cavity

Do you remember Binping & Silvia's presentation?

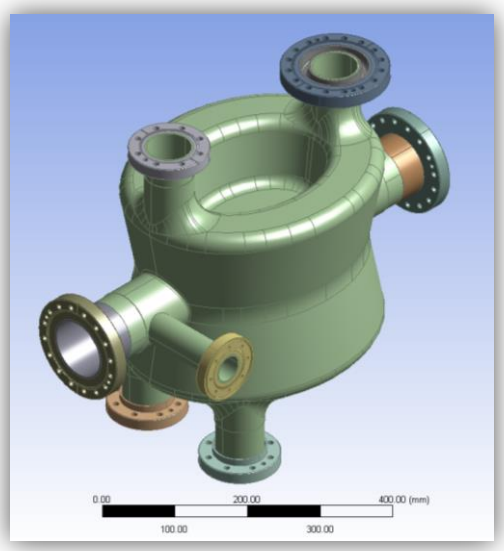

HL-LHC Quarter-wave CRAB Cavity developed by the Brookhaven National Laboratory

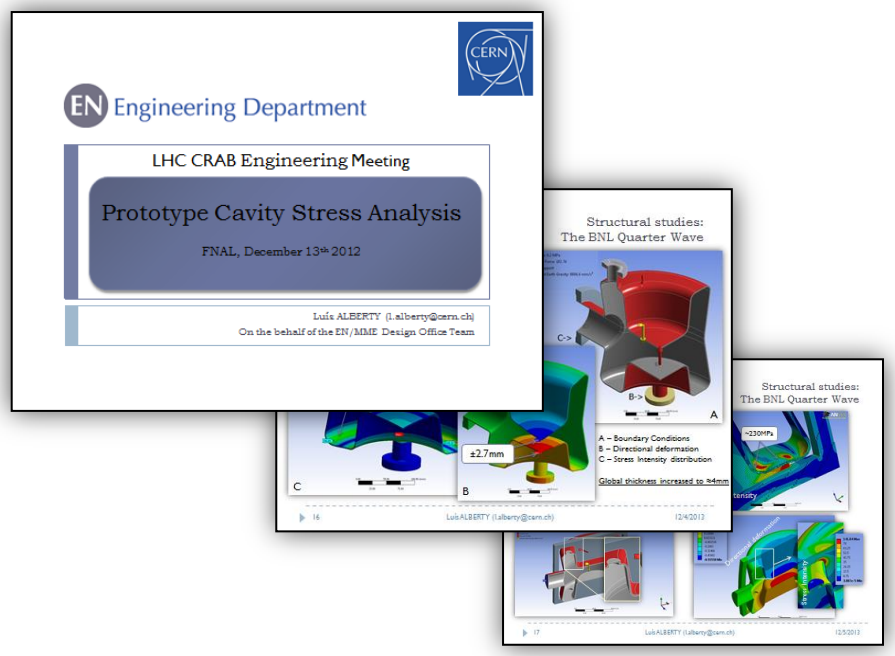

↑ And our last December meeting? Preliminary stress analysis presented…

Quarter-wave cavity

Cooling – see Federico & Krzysztof's talks later...

CRAB Cavities – selected requirements*

Cooling	2K saturated He-II @ 20 mbar (+/- 0.5 mbar) 80K liquid nitrogen
Dynamic heat load @2K	~3.7 W/cavity
Cavity material	Nb RRR>300
SPS tests frequency range	80 kHz (Ofelia's talk yesterday)
Detuning resolution	200 Hz (about ¼ bandwidth)
Connectivity	brazed stainless steel flanges
Cavity alignment tolerances *LHC* *SPS – position monitoring only*	w.r.t. each other: 0.7mm (transverse) 10mm (longitudinal) rotation around z: 0.3° Tilt w.r.t. z: <1 mrad

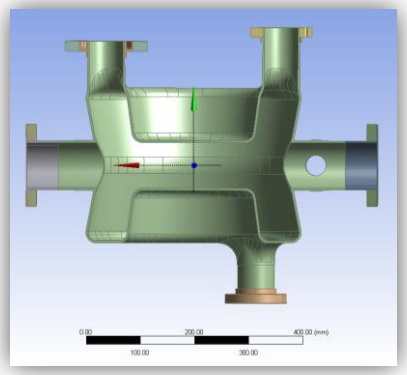

Vertical test SM18

SPS Testing

LHC

SPS Pressure & Temperature conditions*

Temperature	2K
Pressure	20 mbar (abs)
Safety valve set-point	1.8±0.15 bar (abs)
Maximum allowable pressure	1.8 bar (abs)
Test pressure	2.6 bar (gauge)

* P. Baudrenghien *et al*, 'Functional Specifications of the LHC Prototype Crab Cavity System', HiLumi LHC Scientific/Technical Note, CERN February 2013

Outline

- Quarter-wave cavity
- The SPS Integration
- First cryomodule design
- Helium vessel design
- Cryomodule assembly
- Conclusions
- Outlook

The SPS Integration

Wait for Alick's talk (afternoon) for more details...

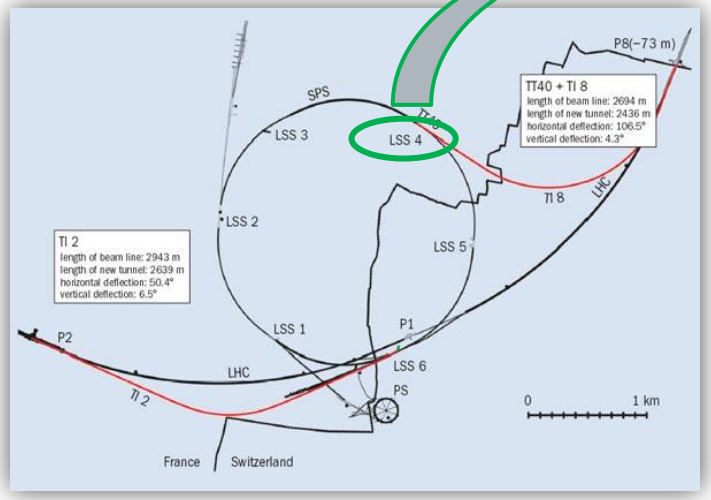

Integration at SPS Sextant 4 (LSS4)

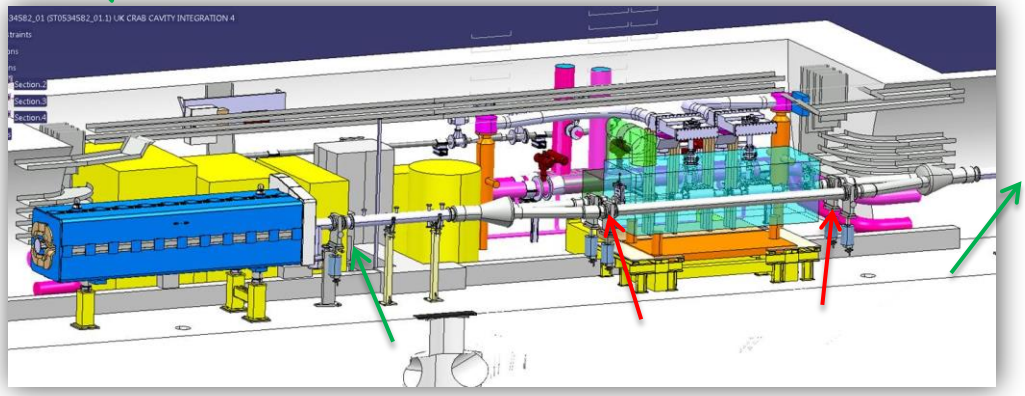

SPS LSS4 (COLDEX)

Integration constraints*:

- Envelope (cryostat + ports) 3000(L)x1100(W)x1500(H) mm
- Bypass beam line & sliding table
- 2 cavities per cryomodule

Vacuum valves & transitions
Fast vacuum valves

* P. Baudrenghien *et al*, 'Functional Specifications of the LHC Prototype Crab Cavity System', HiLumi LHC Scientific/Technical Note, CERN February 2013

- SPS Tunnel integration

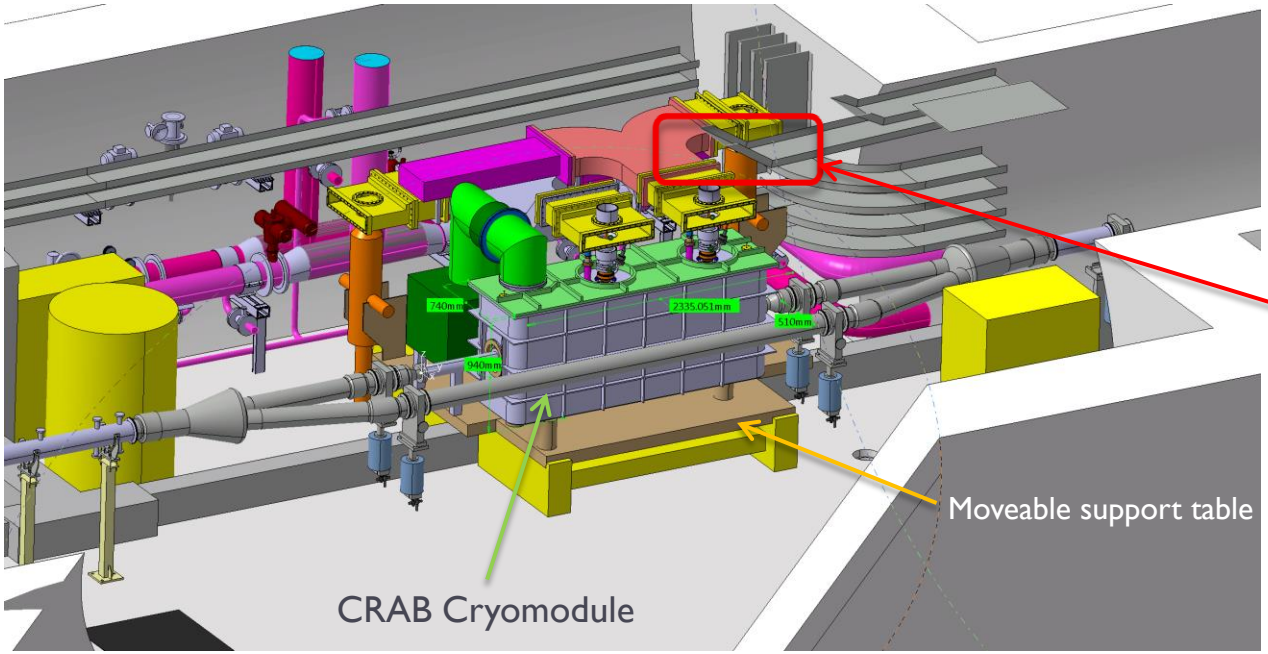

…some complex cable routing!

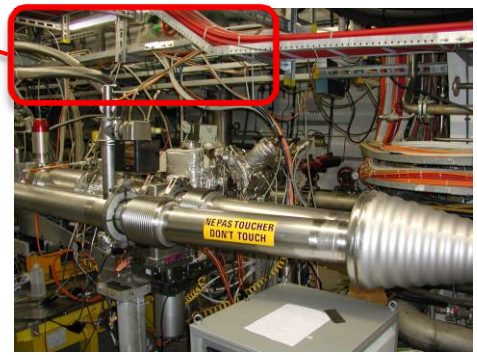

Outer cryostat dimensions: 2335(L)x740(W)x 940(H) mm

Outline

- Quarter-wave cavity
- The SPS Integration
- First cryomodule design
- Helium vessel design
- Cryomodule assembly
- Conclusions & outlook

- First cryomodule design
  - External view

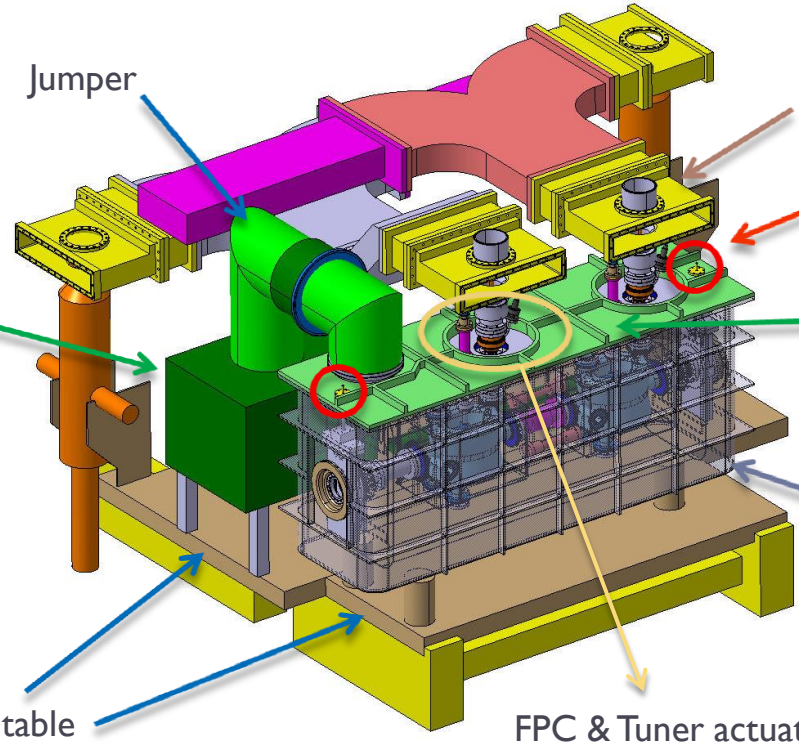

Remark:
Vacuum group to be integrated (side access)

- First cryomodule design
  - Cut-view

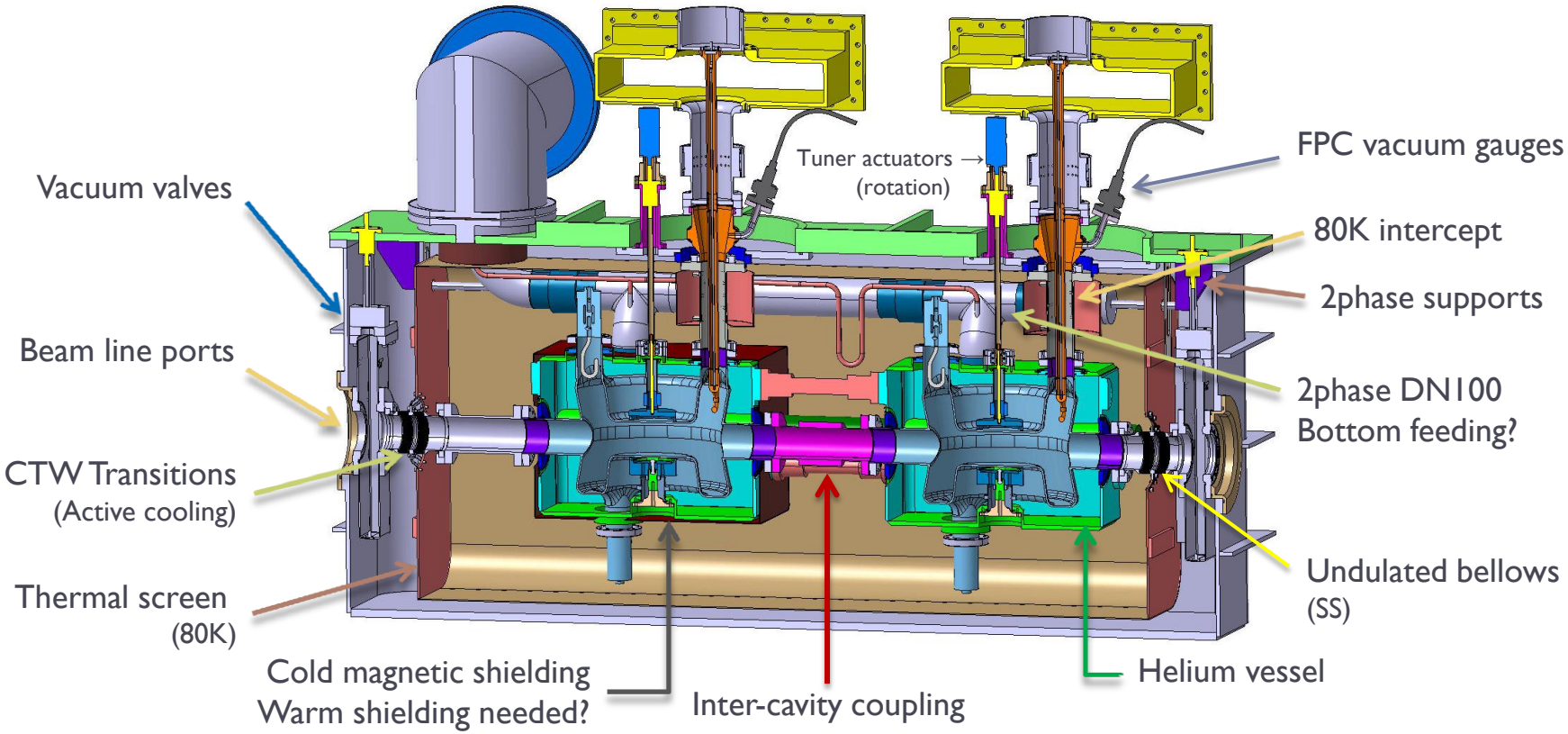

Outline

- Quarter-wave cavity
- The SPS Integration
- First cryomodule design
- Helium vessel design
- Cryomodule assembly
- Conclusions & outlook

- First cryomodule design
  - Helium vessel design

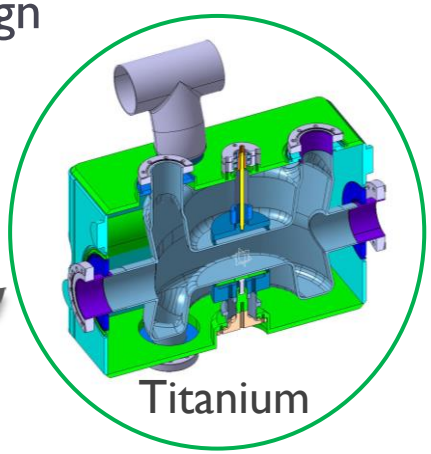
Titanium

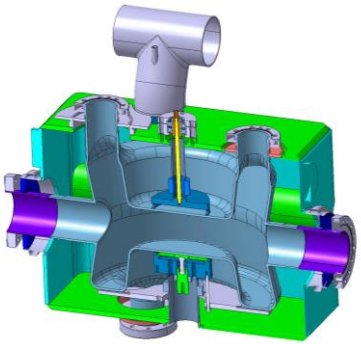
Stainless Steel

	Titanium	Stainless Steel
Thermal expansion compatibility	++	-
Connectivity		++
Rigidity		+
Strength	+ (if grade 5)	
Machinability & Weldability		+

↑ Aspects to take into account for final design

Linear thermal expansion from RT to 4K:

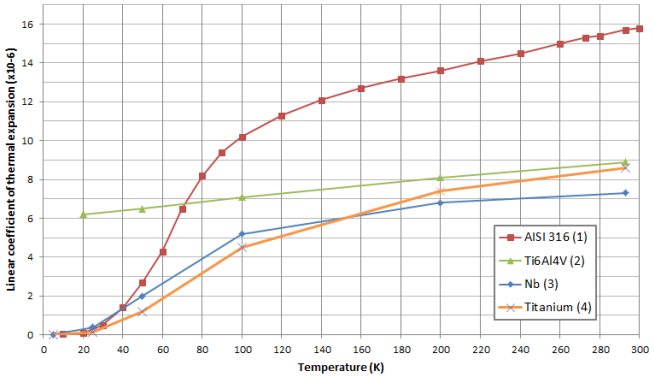

(1) NBS Monograph 29 (May 1961)
(2), (3) & (4) Y. S. Touloukian – Thermophysical Properties of Matter

- Assembly of titanium helium vessel … shown by Silvia yesterday…

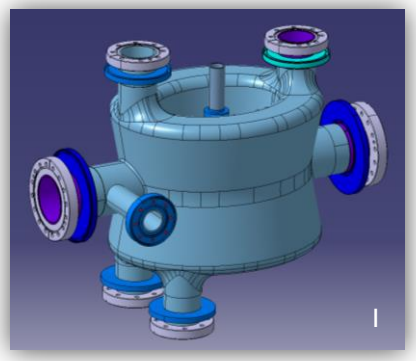

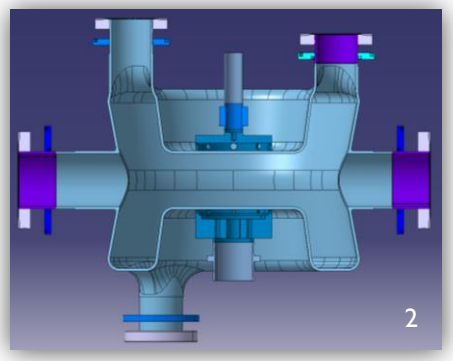

As-manufactured cavity: brazed SS flanges, EBW titanium rings, titanium connectivity for tuning system

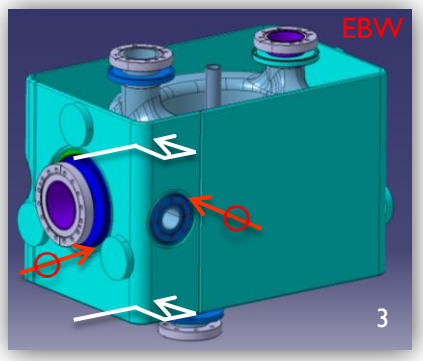

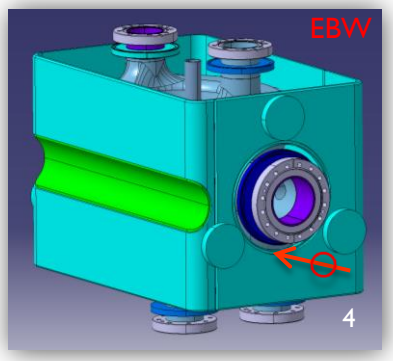

Assembly of lateral titanium panels (EBW)

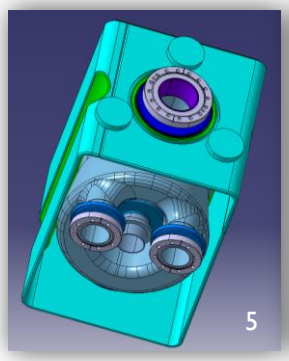

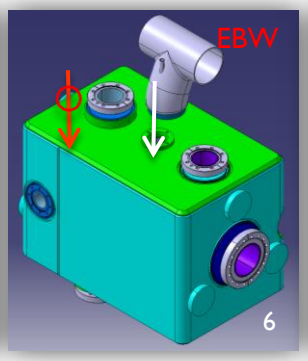

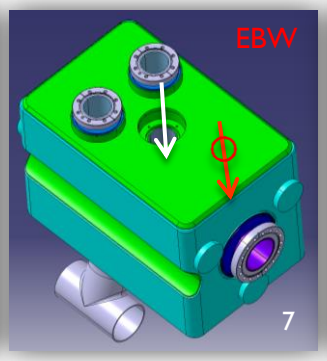

Assembly of top plate (with 2phase feed) & bottom plate. EBW of plates

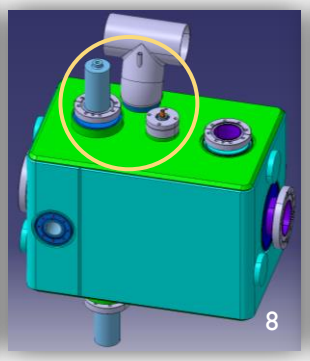

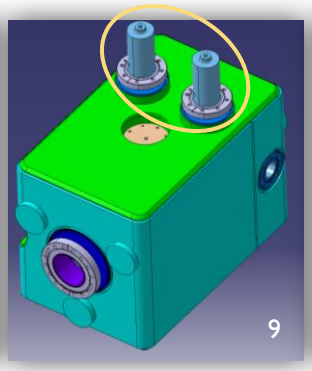

Assembly of the HOM filters

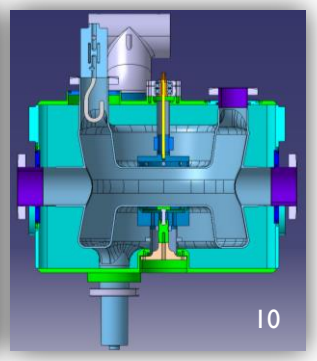

Assembly tuning system

- Assembly of the SS helium vessel

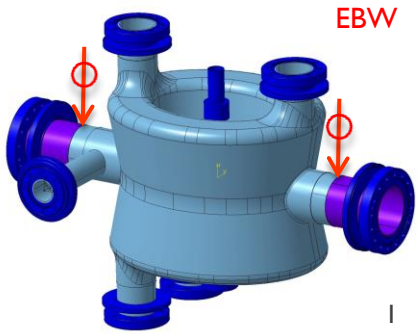

As-manufactured cavity
All brazed flanges & rings

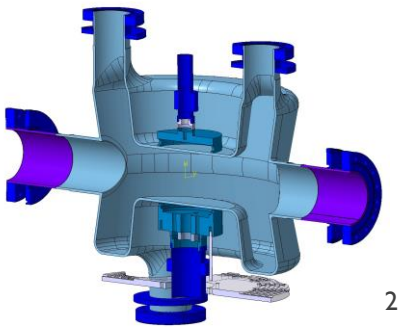

Bottom plate reinforcement – tuning

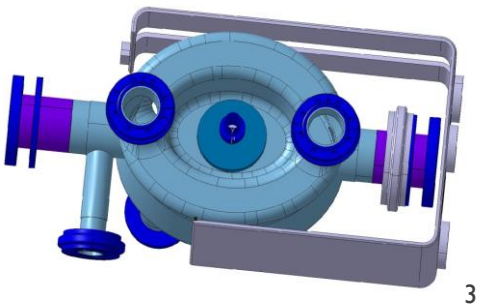

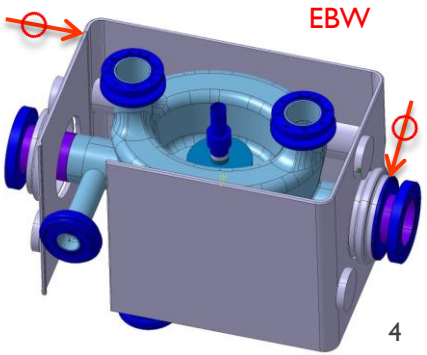

Assembly of stainless steel sectors around the cavity - EBW

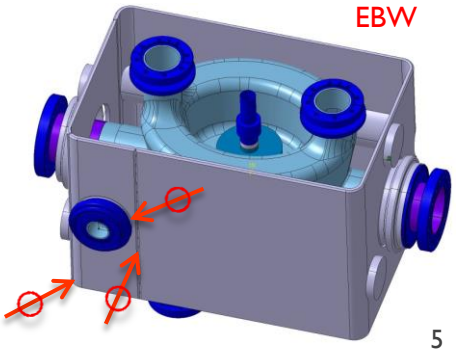

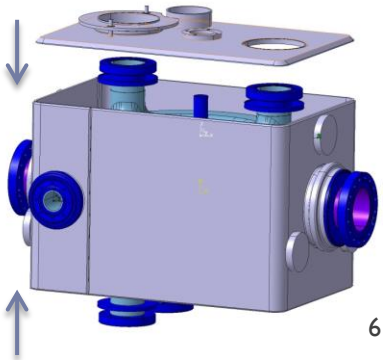

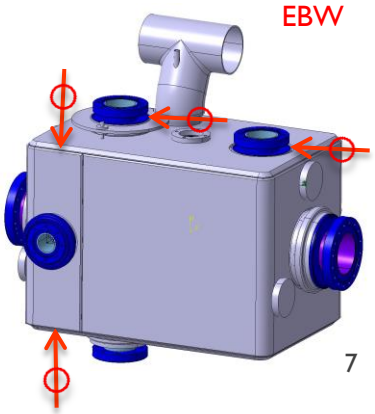

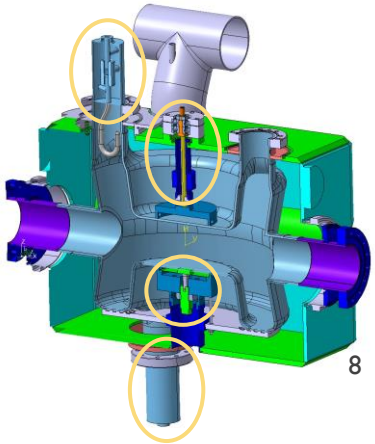

Outline

- Quarter-wave cavity
- The SPS Integration
- First cryomodule design
- Helium vessel design
- Cryomodule assembly
- Conclusions & outlook

Cryomodule assembly

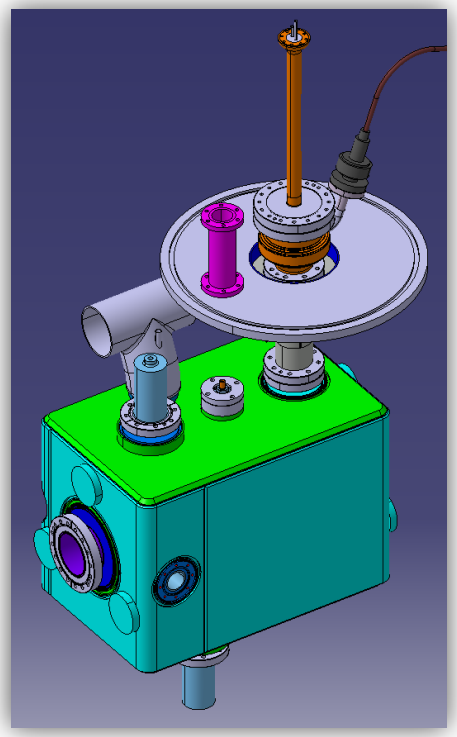

Done in the clean room:
- Assembly of the FPC
- Assembly of the connectivity flange

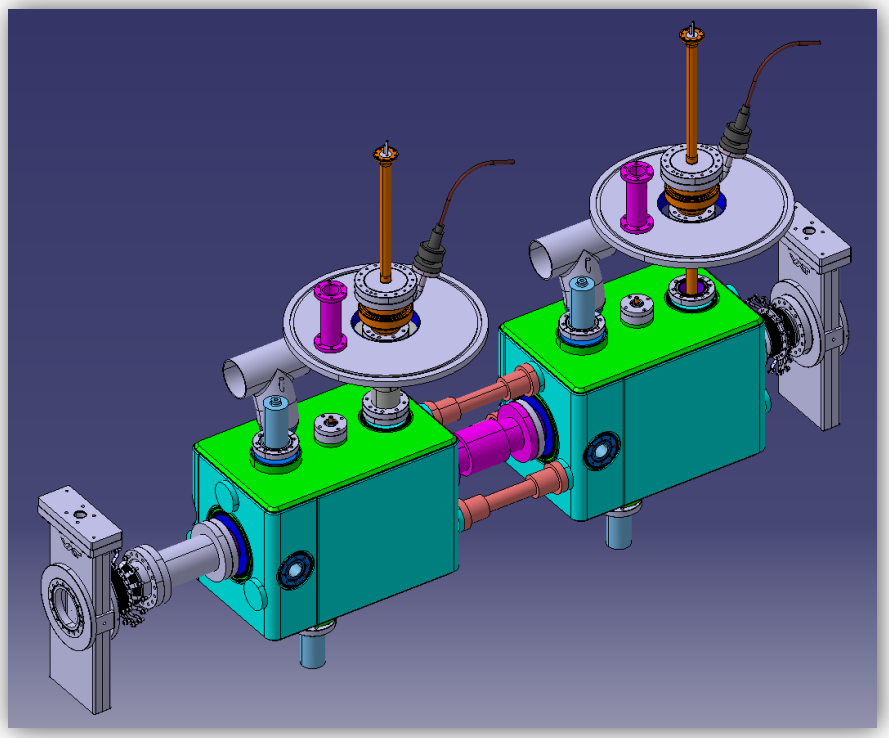

Done in the clean room:
- Assembly of interconnection (sliding) rods and bellow
- Assembly of extension beam tubes (SS) and CTW transitions
- Beam volume closed by VAT 47 DN100 (modified for top actuation) all-metal sector valves

- Cryomodule assembly

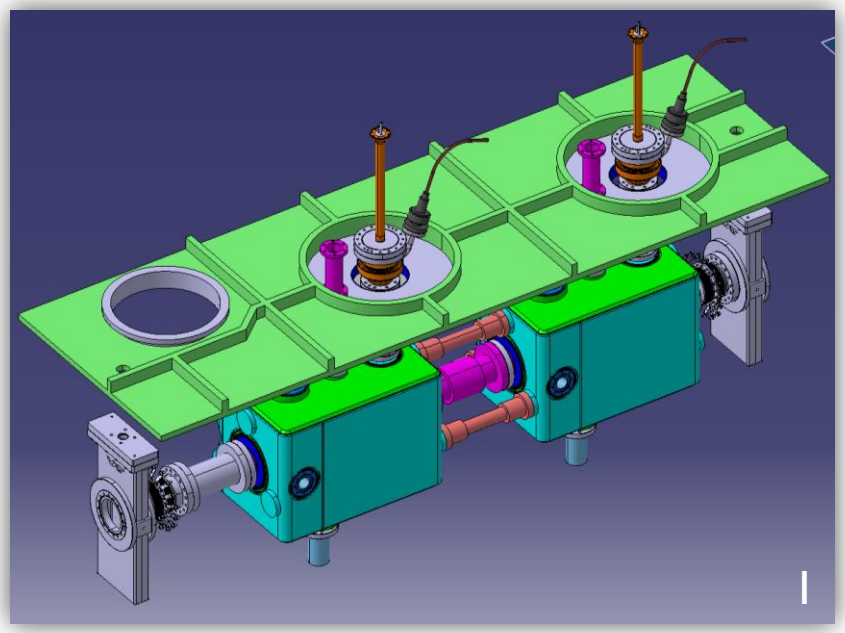

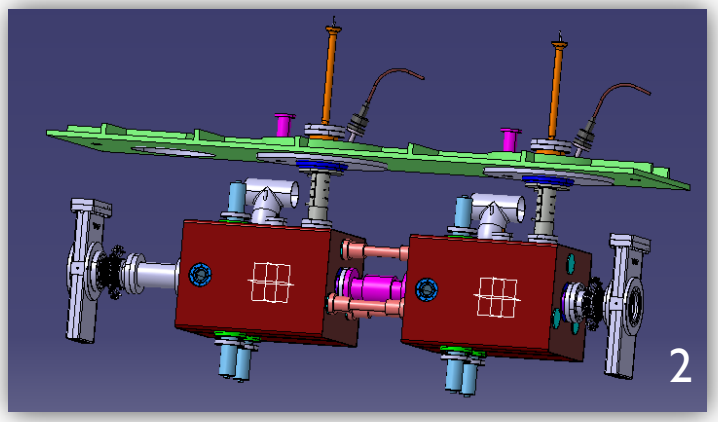

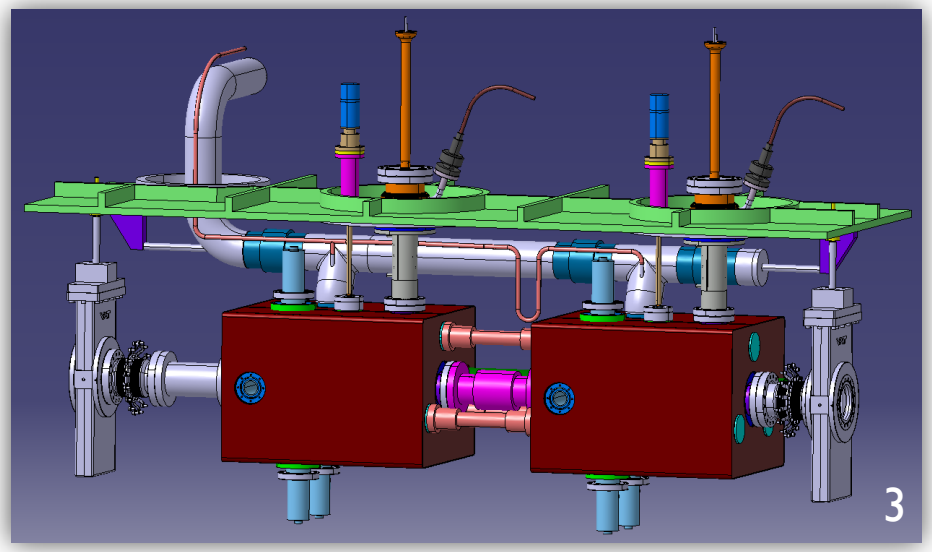

Done in the assembly hall:

- Assembly of the top plate of the cryostat (1)
- Assembly of the cold magnetic shielding (2)
- Assembly of the sector valves actuation (3)
- Assembly of the 2phase line & supports (3)
- Assembly of the tuning actuation rod + motorisation (3)

Cryomodule assembly

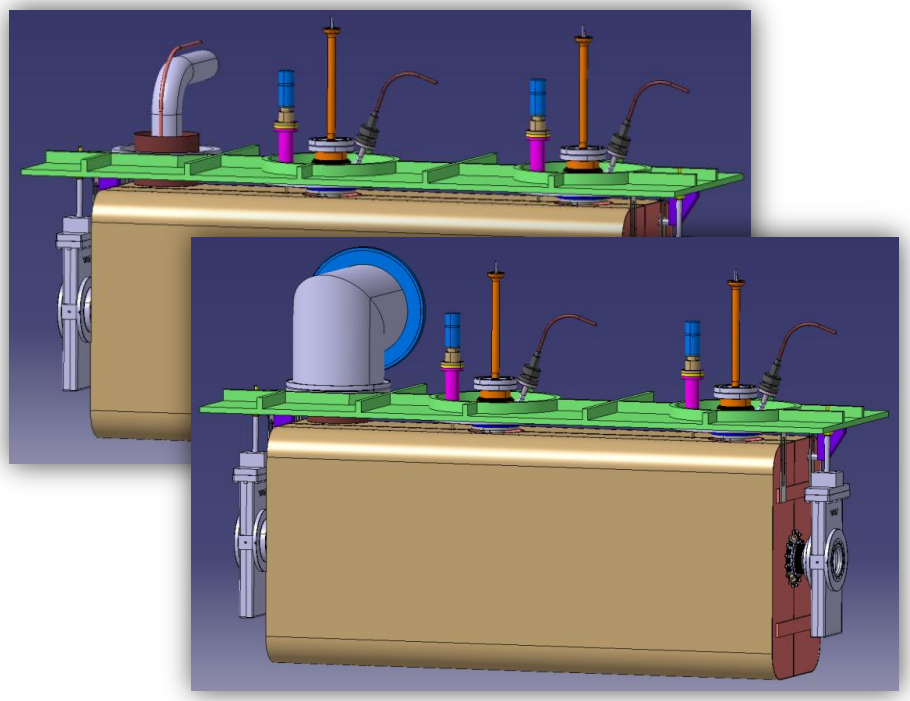

Done in the assembly hall:
- Assembly of the thermal screen (80K) & cryogenic connections
- Assembly of half jumper

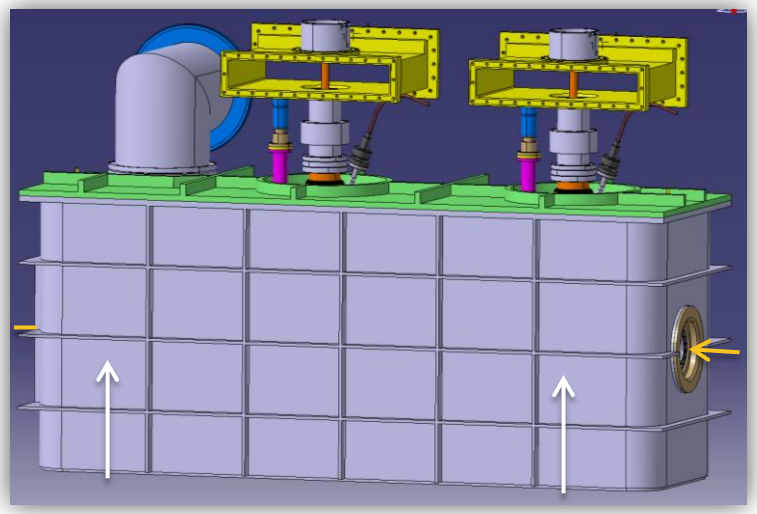

Done in the assembly hall:
- Assembly of the vacuum vessel from the bottom
- Connection of the beam port (see picture below)
- Assembly of the remaining waveguide to coax transition

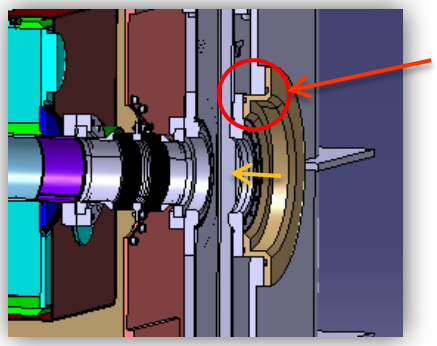

Outline

- Quarter-wave cavity
- The SPS Integration
- First cryomodule design
- Helium vessel design
- Cryomodule assembly
- Conclusions & outlook

Conclusions

- Integration of the DQWCC seems possible with both SS & Ti helium vessels – being developed in parallel;
- Both He vessel configurations compatible with the SPS test Cryomodule;
- Sector vacuum valves allow minimizing assembly in clean room (LHC cryostat – robustness?);
- 80K LN2 heat intercepts + thermal screen expected allowing for minimum heat load into saturated He-II (talks later);
- Combined piezo + coarse tuning are <u>independent</u> and combined aim at reaching the specified tuning range & resolution (80 kHz | 200 Hz - ~0.1µm);
- 2 cold piezo integration possible – backup!

Outlook

- Finalization of first integration studies – end of the year;
- Detail design according to standards/safety requirements & detailed calculations will follow (pressure equipment, magnetic shielding – do we need warm shielding?, detailed tuning system design, alignment monitoring strategy, etc…);
- Equipment safety file to be built in EDMS from day 1;
- Cryomodule design to be released for fabrication (tentative) by the end of 2014;
- Remember: prior to release for manufacturing…

Thank you for your attention