From bare cavities to dressed cavities to cryomodules: Introduction to specifications

Ofelia Capatina
on behalf of the CERN specification team

The HiLumi LHC Design Study is included in the High Luminosity LHC project and is partly funded by the European Commission within the Framework Programme 7 Capacities Specific Programme, Grant Agreement 284404.

Functional specification

2013-03-05

Contacts: Rama.Calaga@cern.ch,
Alick.Macpherson@cern.ch

Functional Specifications of the LHC Prototype Crab Cavity System

P. Baudrenghien, K. Brodzinski, R. Calaga, O. Capatina, E. Jensen, A. Macpherson,
E. Montesinos, V. Parma

Keywords: Crab Cavity, cryostat, LHC, SPS

Summary

This document outlines the functional specifications for LHC prototype crab cavities to be tested in the SPS, and describes a first look at the RF system, cryomodule and cryogenic aspects. These guidelines are prepared with input from experts at CERN and the HiLumi collaboration, including EuCARD and USLARP.

https://espace.cern.ch/HiLumi/WP4/Lists/Team%20Discussion/AllItems.aspx

General

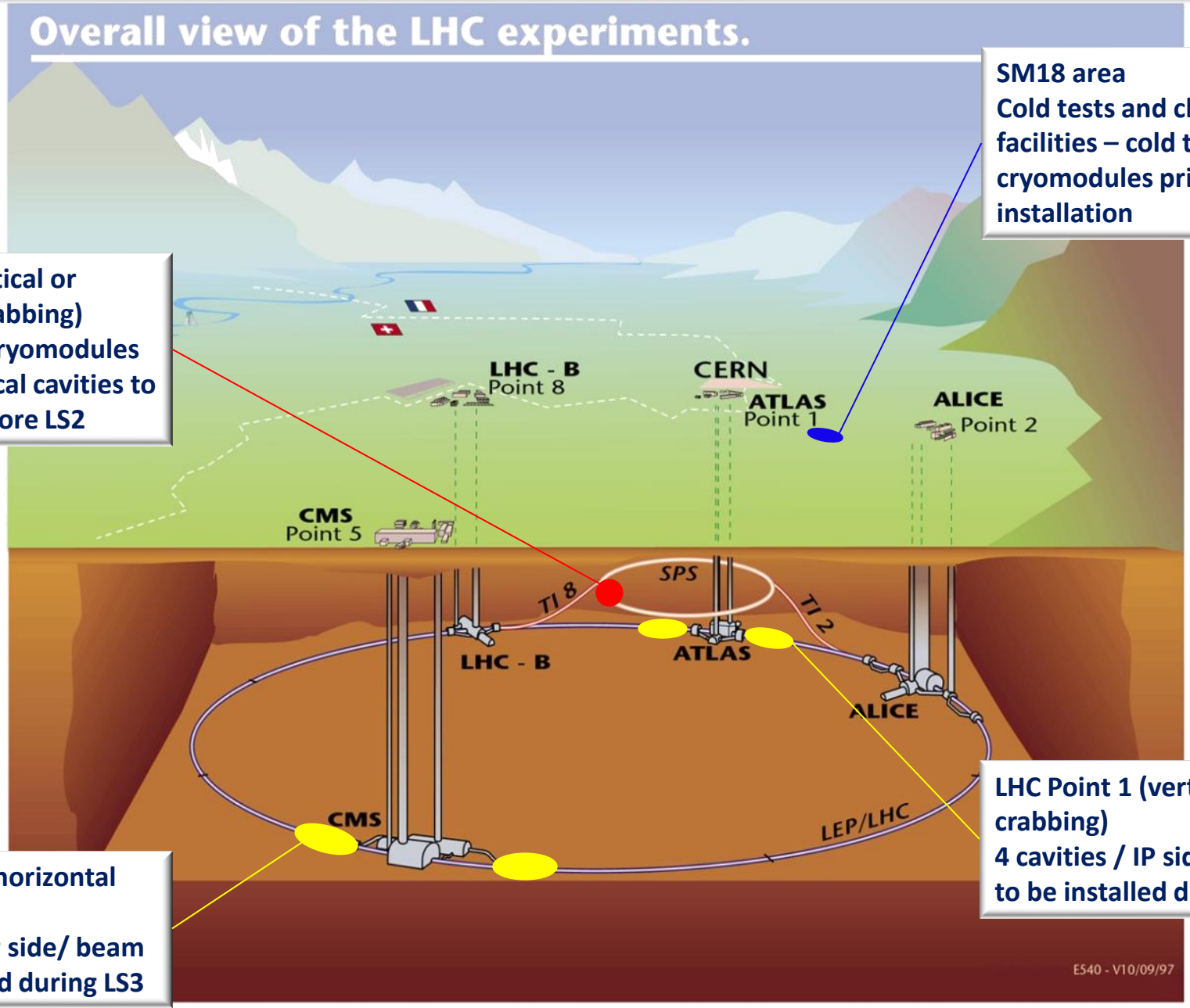

SM18 area
Cold tests and clean room facilities – cold test of cryomodules prior tunnel installation

SPS BA4 (vertical or horizontal crabbing)
One or two cryomodules with 2 identical cavities to be tested before LS2

LHC Point 1 (vertical crabbing)
4 cavities / IP side/ beam to be installed during LS3

LHC Point 5 (horizontal crabbing)
4 cavities / IP side/ beam to be installed during LS3

General

- LHC environment

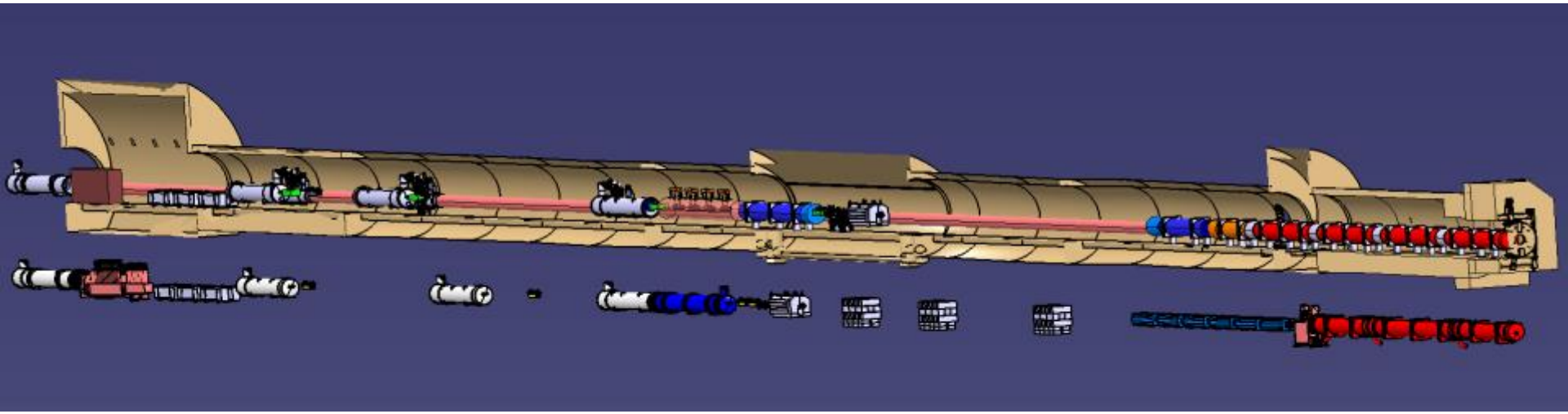

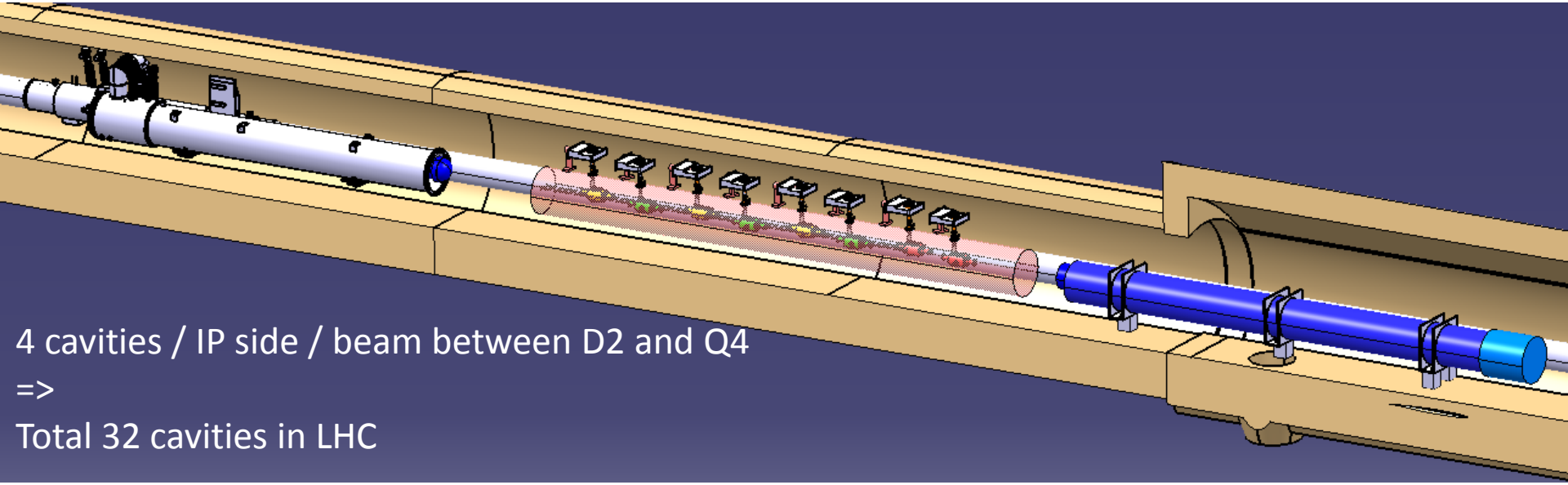

4 cavities / IP side / beam between D2 and Q4
=>
Total 32 cavities in LHC

General

- LHC environment

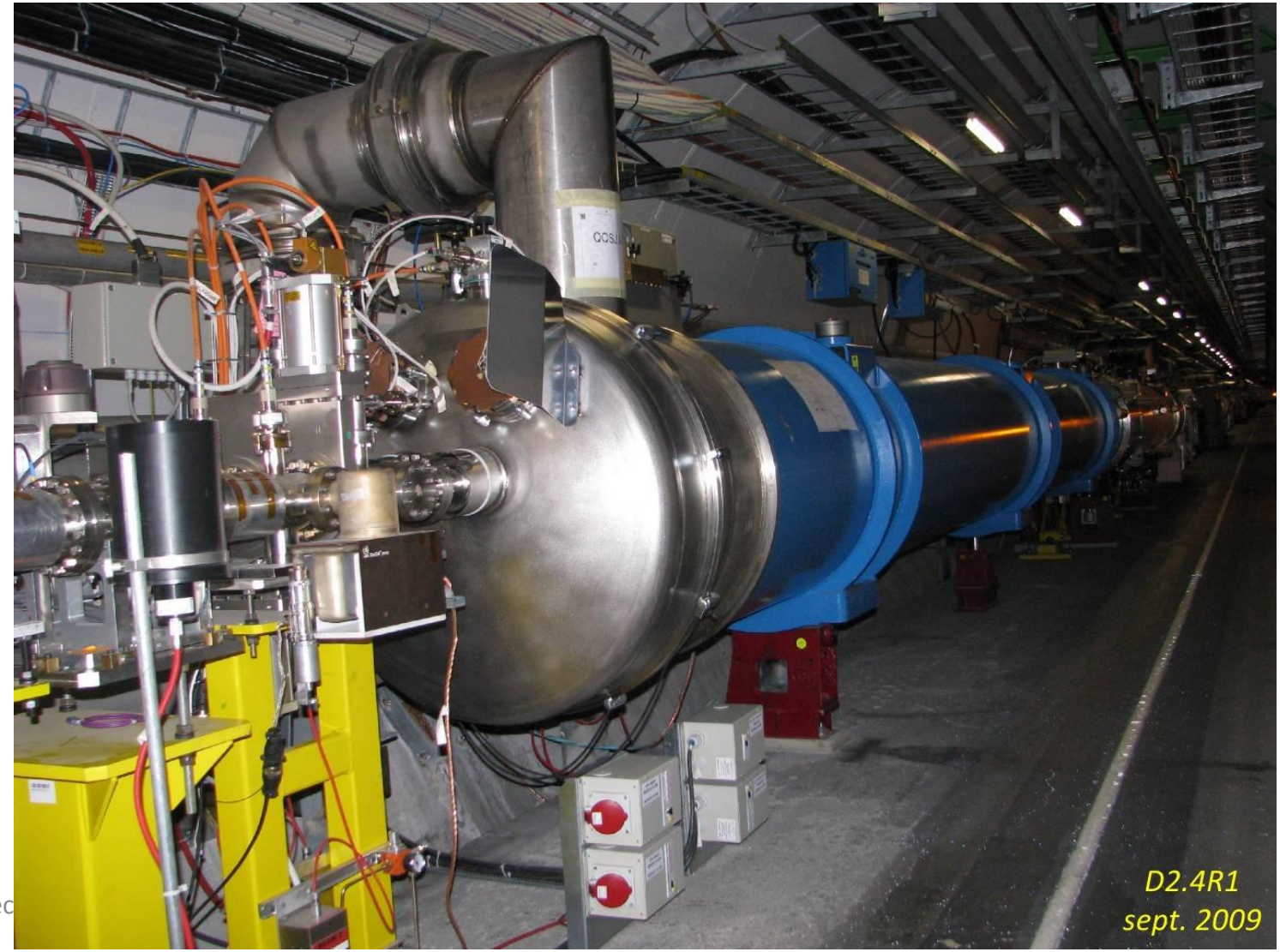

General

- SPS environment

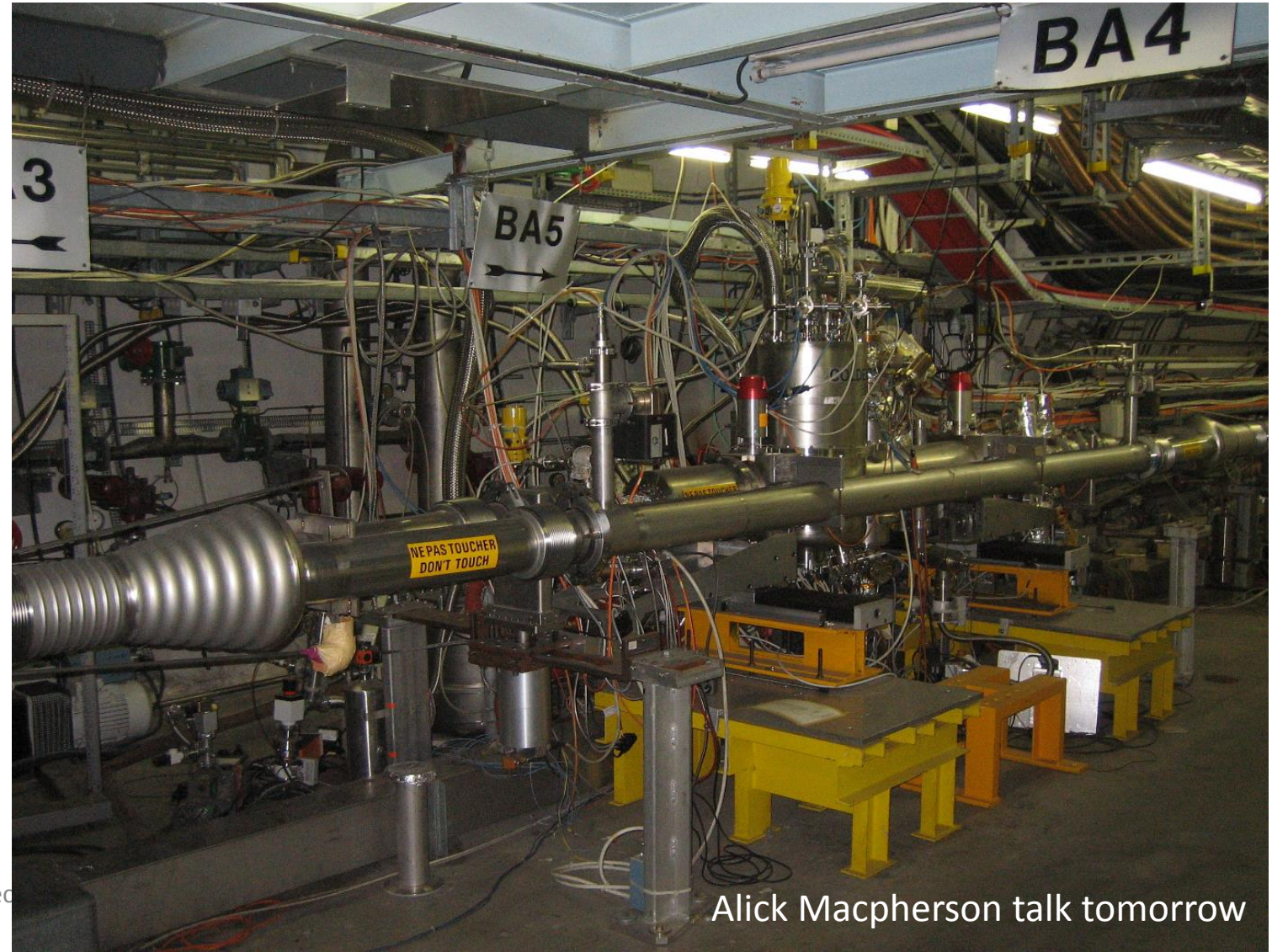

Alick Macpherson talk tomorrow

General

- SPS environment

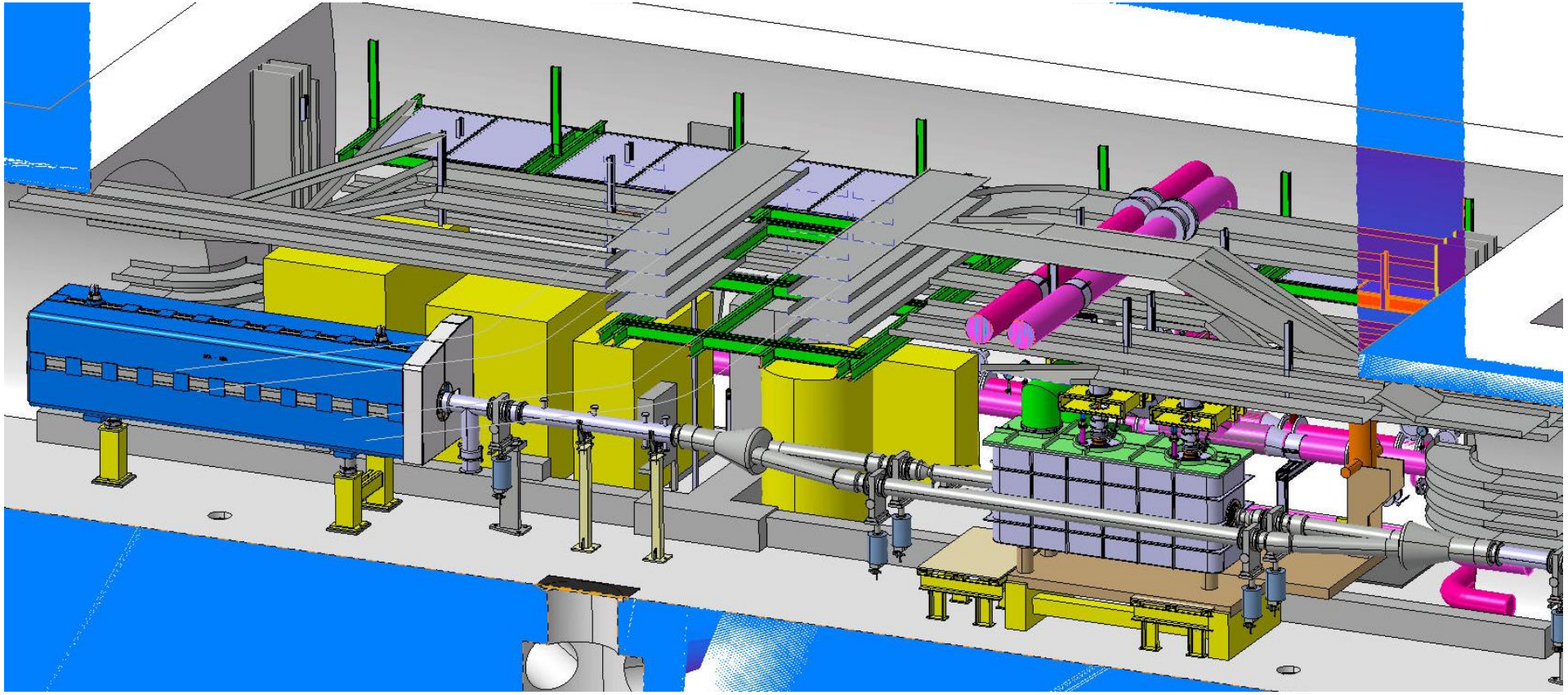

Cryomodule

LHC configuration

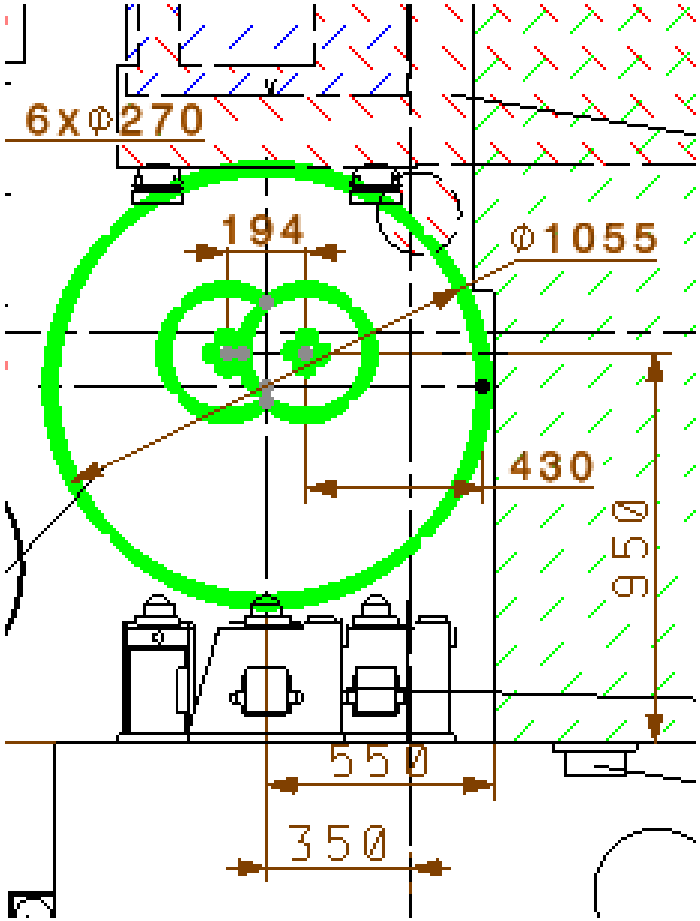

SPS configuration

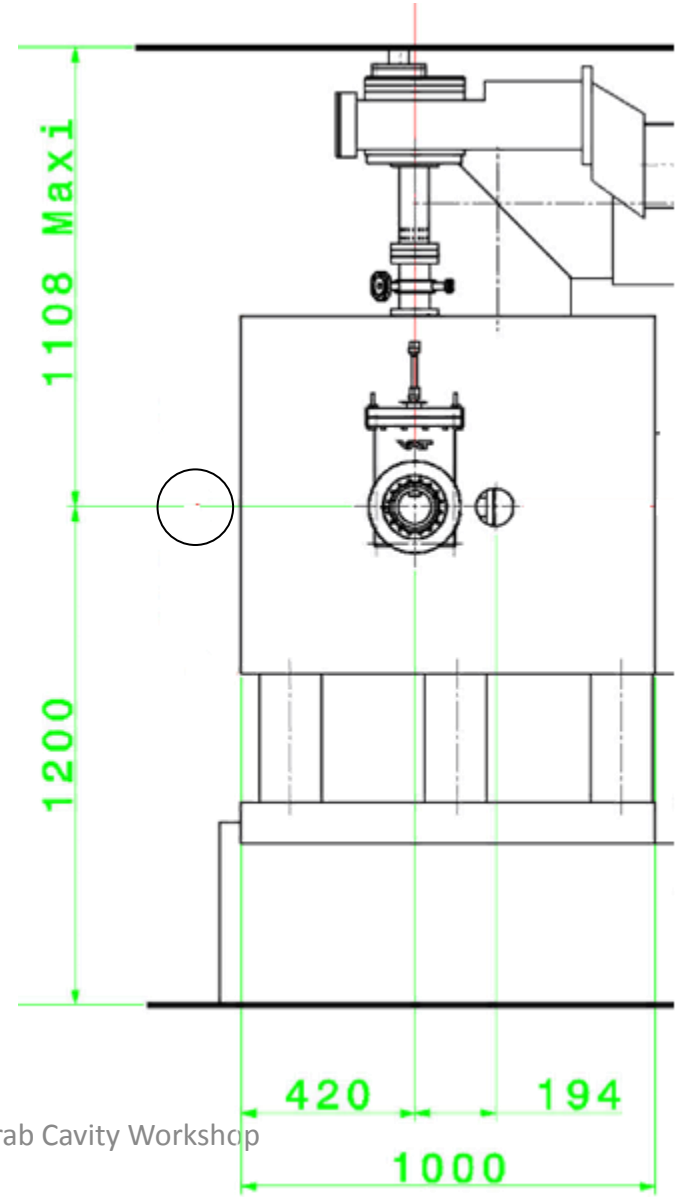

Cavity

- Parameters

Parameter	Units	LHC	SPS		
Beam Energy	GeV	450- 7,000	120	270	450
Kick voltage/cavity	MV	3.4	3.4		
Nb of cavities		$4 \cdot 2_{(IPs)} \cdot 2_{(sides)} \cdot 2_{(beams)} = 32$	2		
Frequency	MHz	400.79	400.73	400.78	400.79
DF_0	kHz	0	-58.2	-12.2	-2.4
Bandwith	kHz	~ 1	~ 1	~ 1	~ 1
Detuning	kHz	±5.5	±21.7		

Bare cavities

- Three valid Nb prototypes exist – very compact concepts to allow for their integration in LHC

4-rod (UK)	RF Dipole (ODU)	Double ¼-wave (BNL)

Covered by talks this morning

Bare cavities

- Cavity maximum dimensions (SPS and LHC)
  - Maximum radius external dimension (including wall thickness) at room temperature < 145 mm, both planes (vertical and horizontal)
  - Adjacent beam pipe at 194mm horizontally from the cavity beam pipe

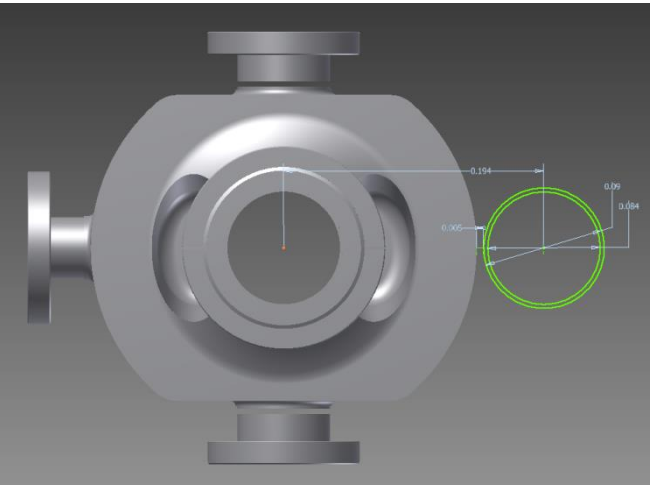

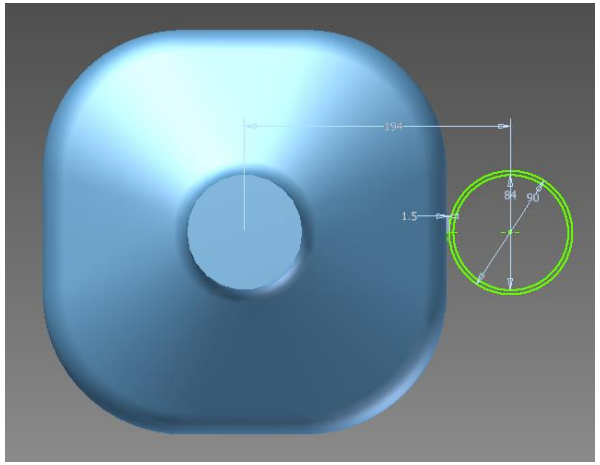

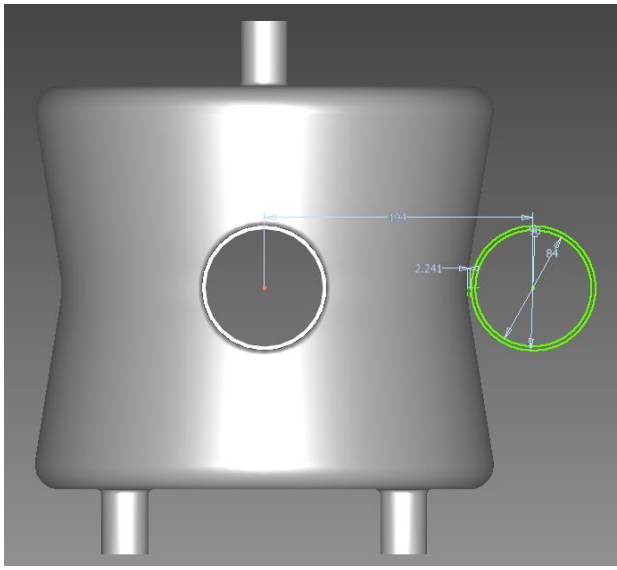

Dressed cavities

- Helium tank and tuner designs are part of cavity design since their behaviour determine cavity operation behaviour

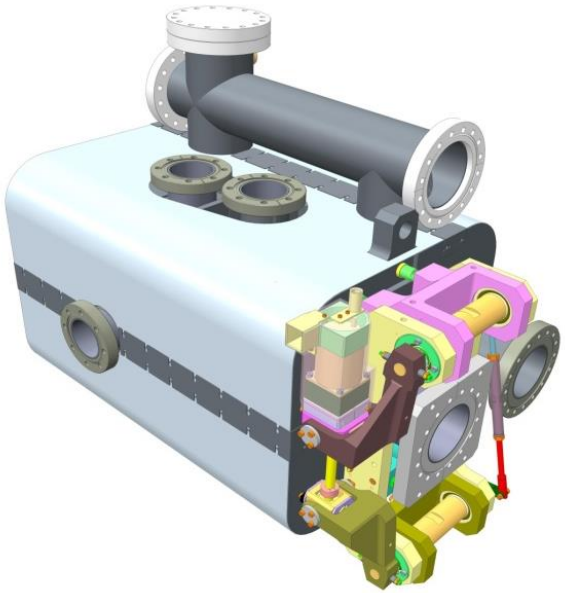

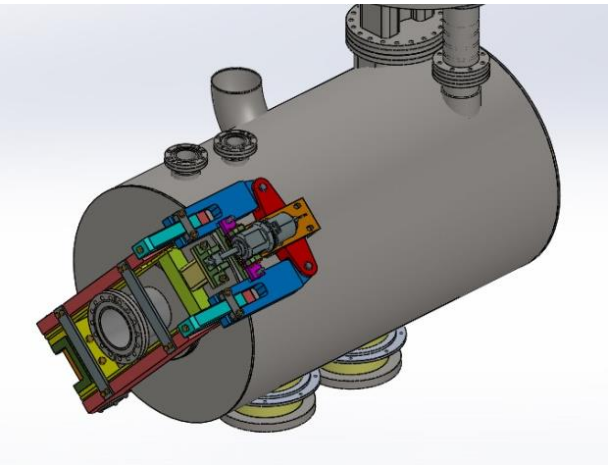

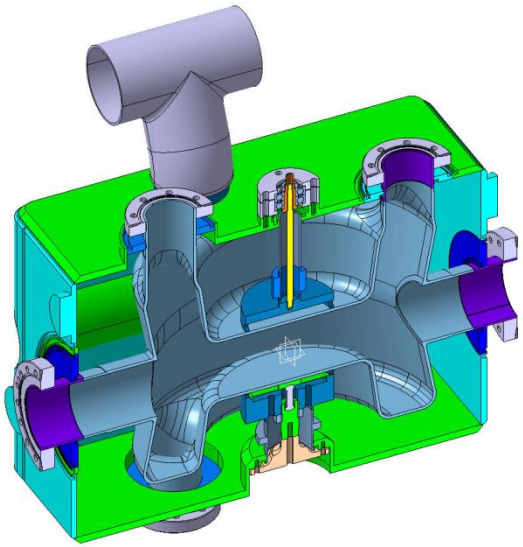

4-rod (UK)	RF Dipole (ODU)	Double ¼-wave (BNL)

Covered by next talks this after-noon

Dressed cavities

- Tuning (SPS tests)
  - Frequencies at SPS tests to be adjusted ("slow") with tuner during operation:
    - Required total range ~ 80 kHz
    - Required resolution ~ 200 Hz (bandwidth ~ 1kHz)

- Tuning (LHC operation)
    - Required total range ~ 11 kHz
    - Required resolution ~ 200 Hz

Dressed cavities

- Stability / pressure fluctuation (SPS and LHC)
  - Operating helium pressure ~ 20 mbar
  - Pressure stability: 1 mbar
    - Design cavities for sensitivity to pressure fluctuation accordingly
    - Cavity bandwidth ~ 1kHz => sensitivity to pressure fluctuation should be significantly lower (cavity specific)

Dressed cavities

- Remarks / tuning
  - If ~ μm/kHz (cavity specific) => cavity stability and shape adjustment in the order of 100 nm !
  - Tuning system has also to compensate for shift in frequency due to manufacturing, processing, cooldown etc… (cavity specific)

  - Cavity mechanical design compromise between
    - Rigidity to ensure stability (Lorentz detuning, pressure fluctuation, …)
    - Flexibility to ensure tunability

Dressed cavities

- Helium tank (SPS and LHC)
  - Operating temperature 2 K (saturated superfluid helium)
  - Maximum pressure
    - Safety valve set pressure 1.8 bar
    - Rupture disc 2.2 bar
  - Helium tank to be dimensioned correctly to extract maximum heat load (static + dynamic)

  - SPS only: Minimize reasonably the liquid helium volume (max. 40 L/cavity if possible)

Dressed cavities

- Materials (SPS and LHC)
  - Helium tank material not imposed; however titanium involves
    - More complex interfaces
    - Not covered by the Harmonised European Standards
  - Stainless steel flanges (1.4429, AISI 316LN) for beam pipe interface
  - Equivalent to EN conventional material grades are preferred

Cryomodule

- SPS :
  - 2 (identical) cavities in a cryomodule
  - 3 different cryomodules

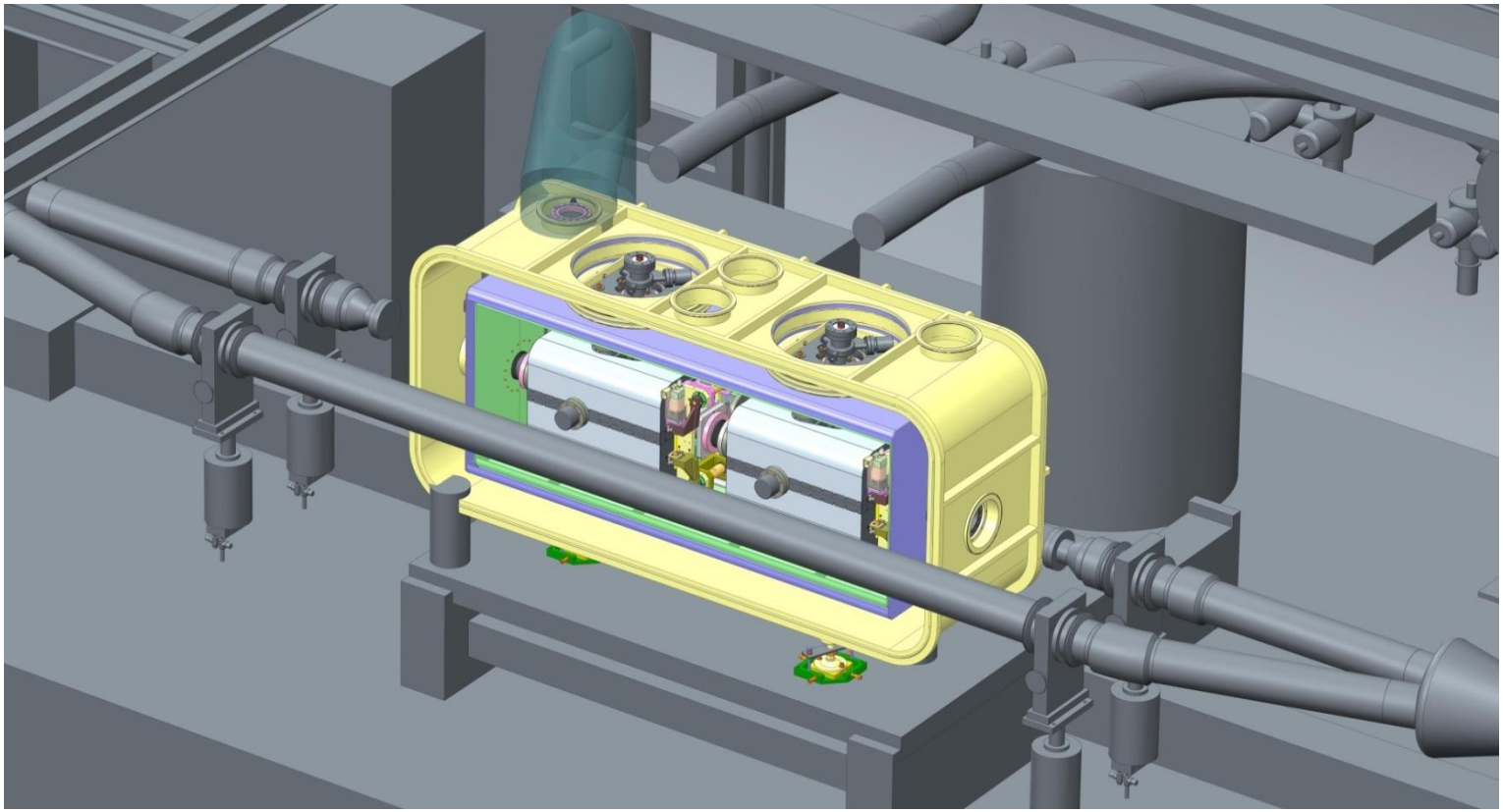

Shrikant Pattalwar talk tomorrow

Cryomodule

- SPS :
  - 2 (identical) cavities in a cryomodule
  - 3 different cryomodules

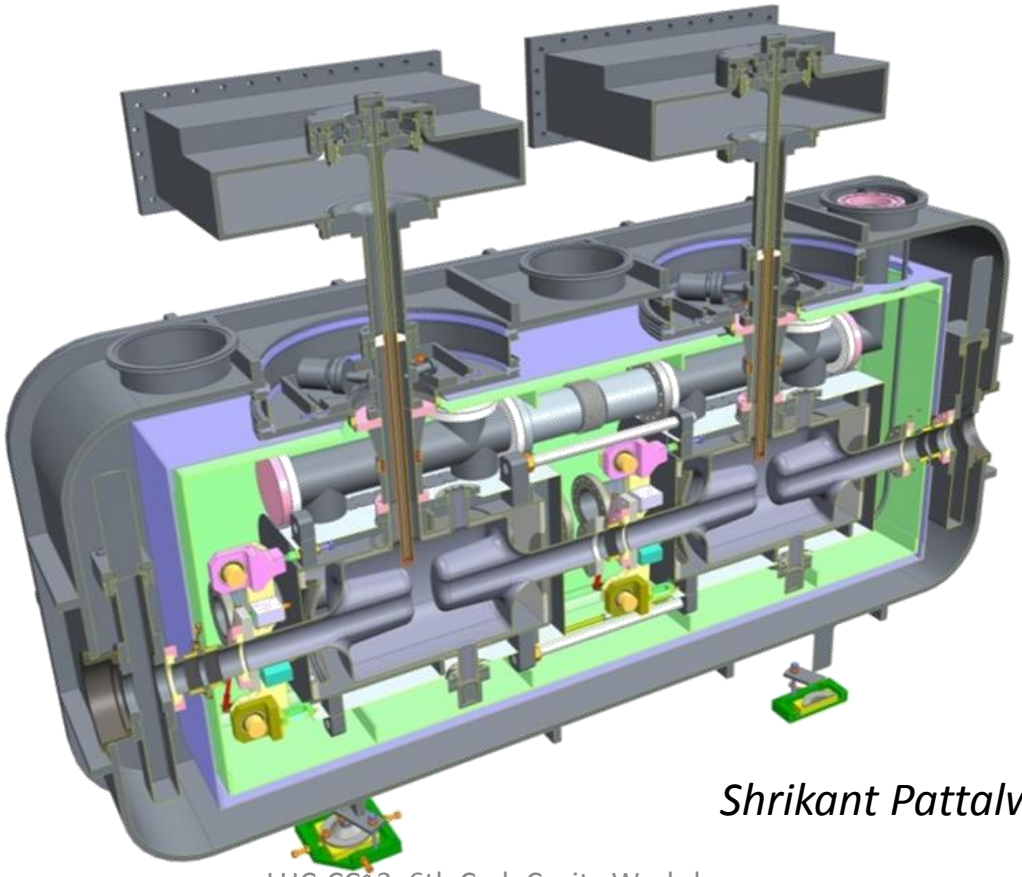

Shrikant Pattalwar talk tomorrow

Cryomodule

- SPS :
  - 2 (identical) cavities in a cryomodule
  - 3 different cryomodules

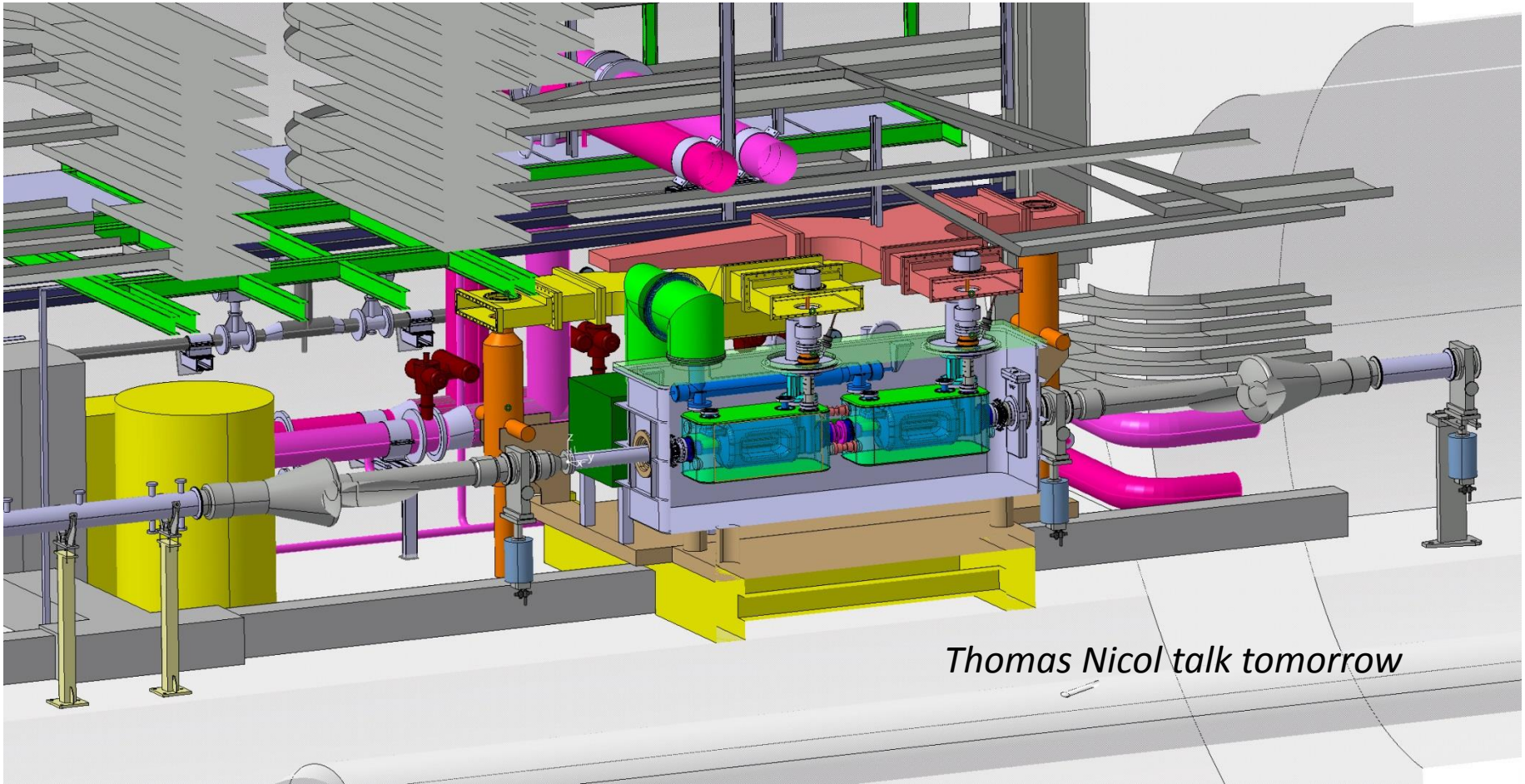

Cryomodule

- SPS :
  - 2 (identical) cavities in a cryomodule
  - 3 different cryomodules

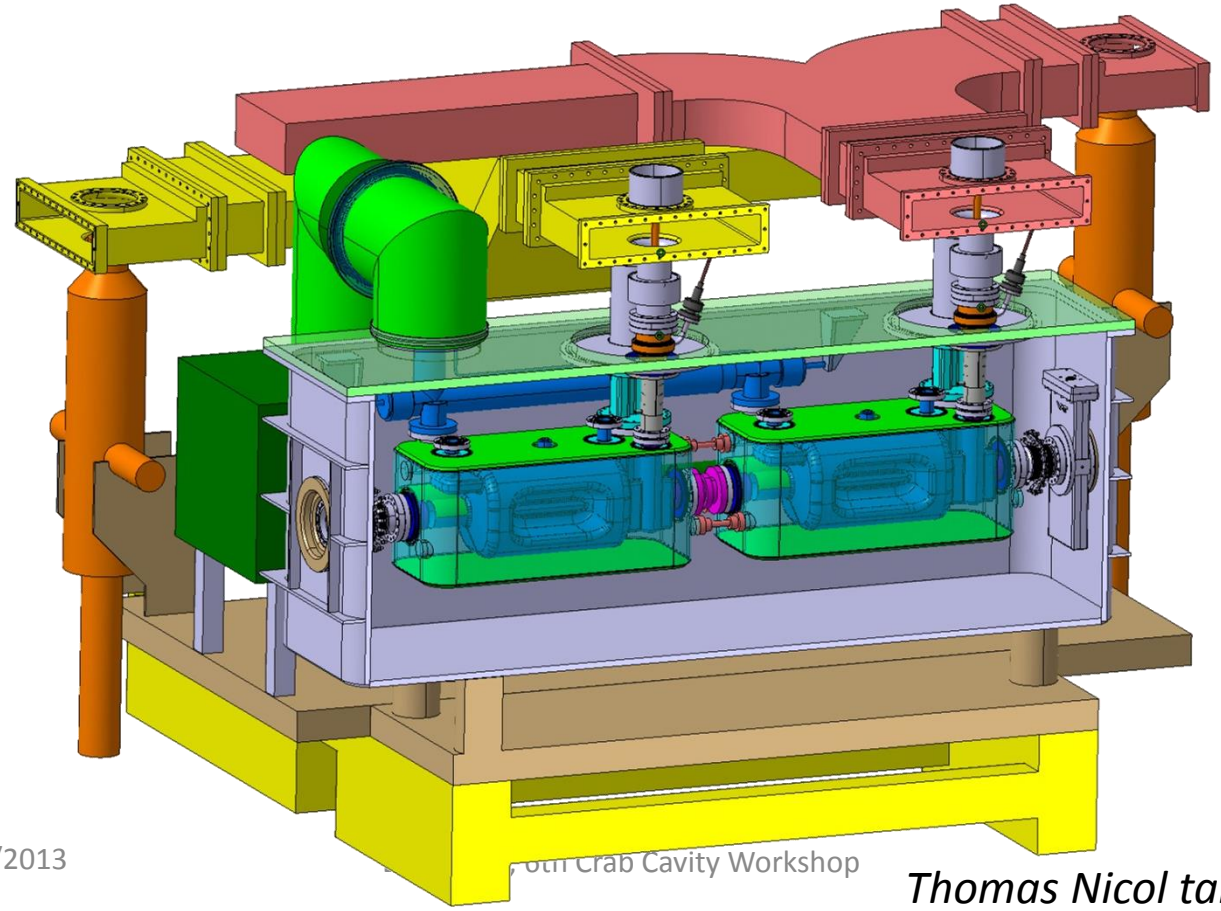

Thomas Nicol talk tomorrow

Cryomodule

- SPS :
  - 2 (identical) cavities in a cryomodule
  - 3 different cryomodules

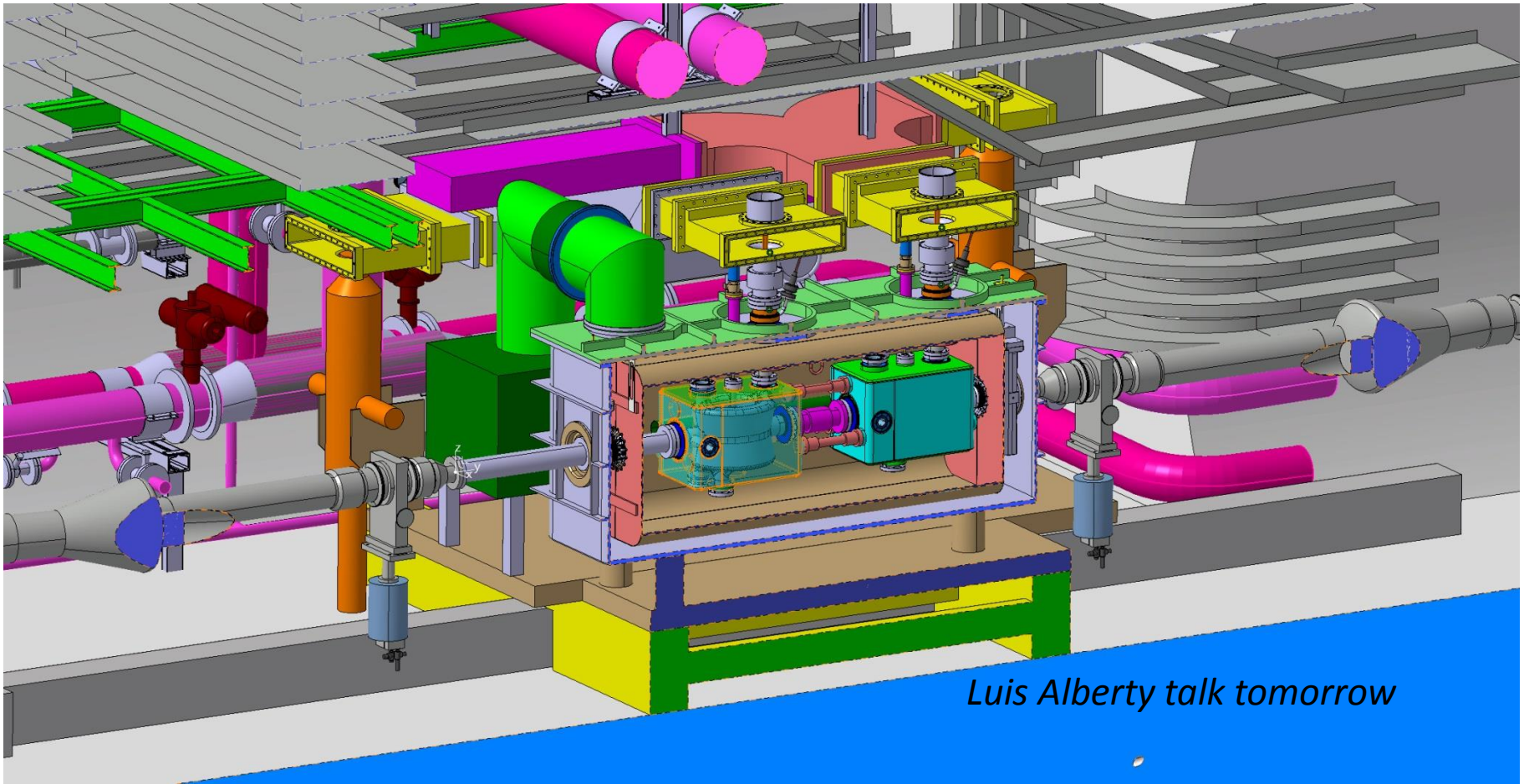

Cryomodule

- SPS :
  - 2 (identical) cavities in a cryomodule
  - 3 different cryomodules

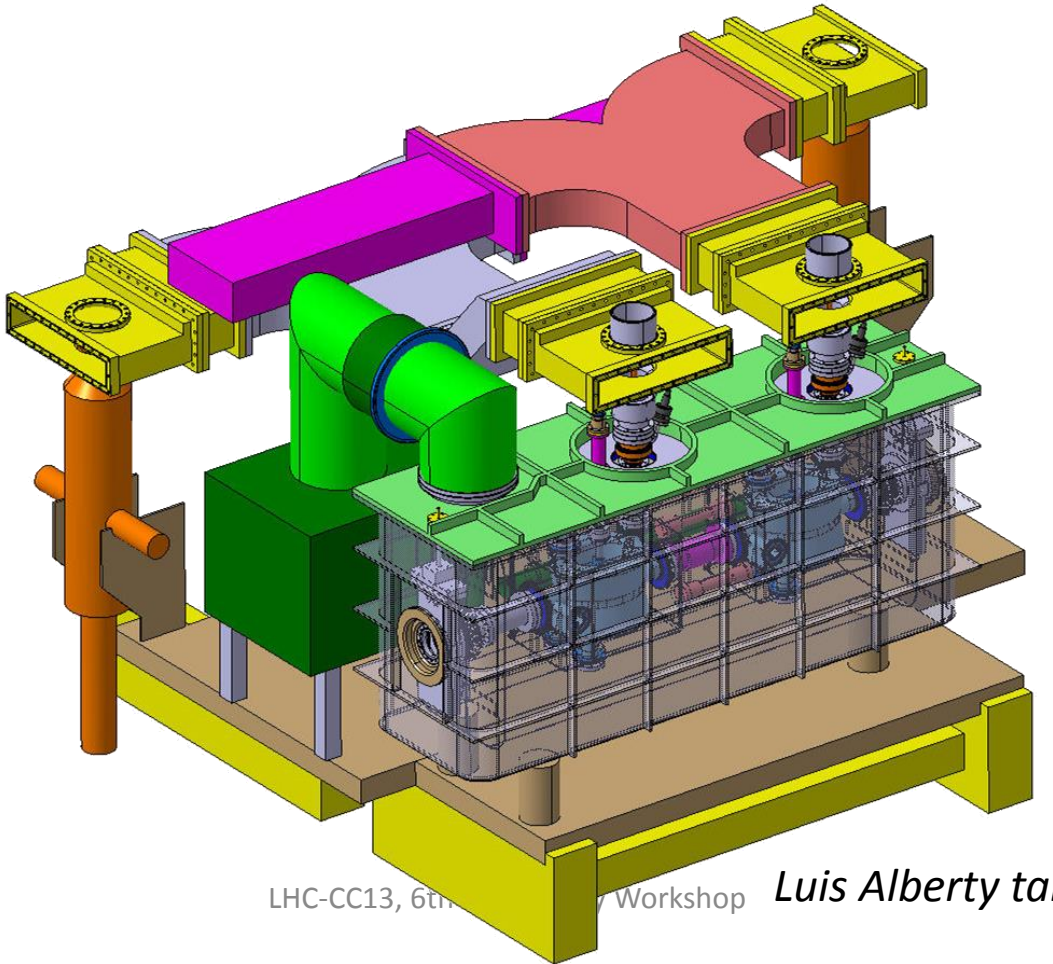

Luis Alberty talk tomorrow

Cryomodule

- Design principle, dimensions and interfaces (RF, cryo) to be standardized as much as possible
- Metric system !

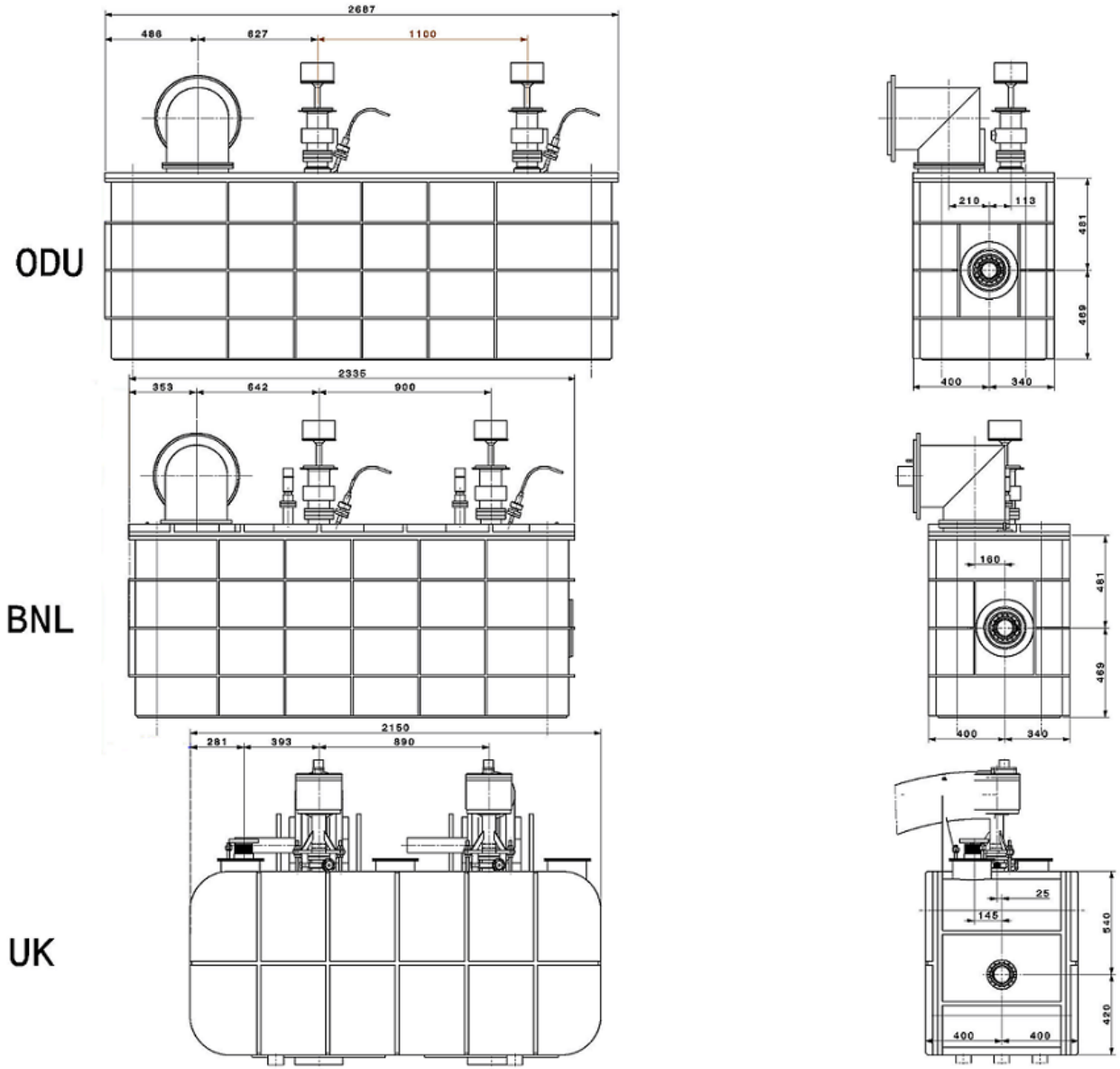

Cryogenics

- SPS:
  - Two circuits: 2 K and 80 K
  - Operated at 2 K saturated helium bath -> ~20 mbar
  - Screening at 80 K provided with LN2
  - Main interface from the top

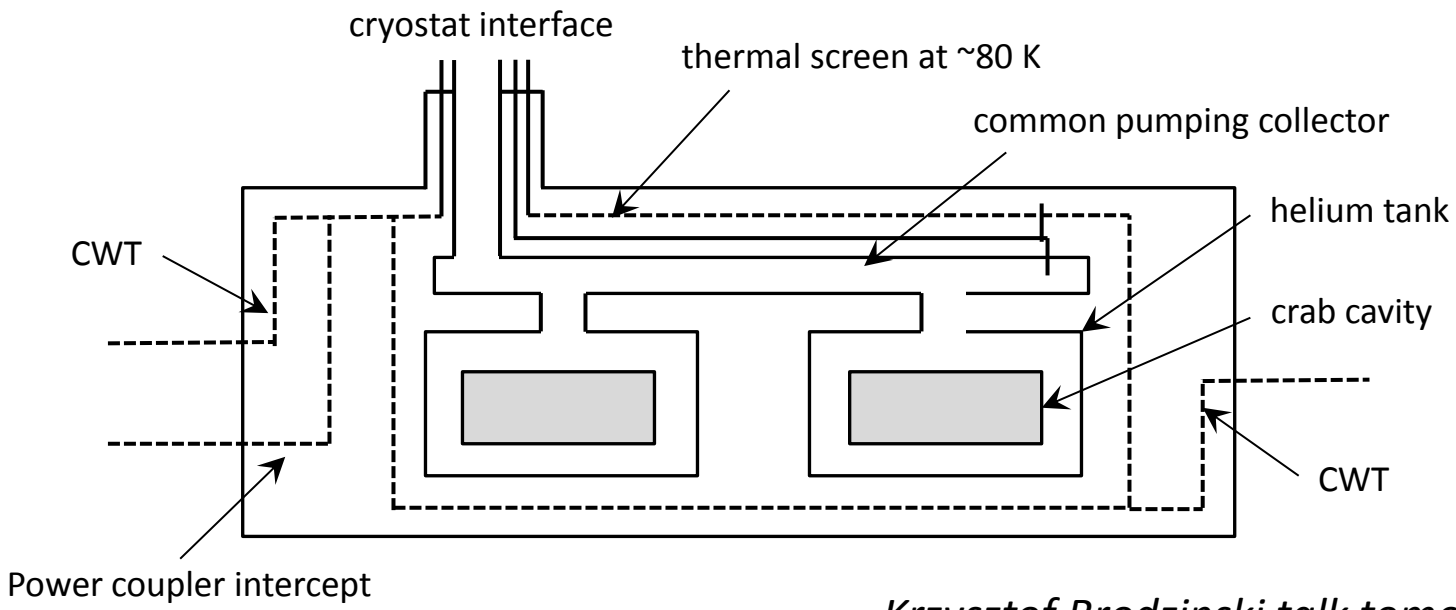

Krzysztof Brodzinski talk tomorrow

Alignment

- LHC - Alignment requirements (position accuracy and position stability) – based on general beam dynamics considerations:
  - Transverse rotation per cavity should be less than 5 mrad
  - Transverse misalignment per cavity (in both planes) should be less than 0.7 mm
  - Cavity tilt with respect to the longitudinal axis should be less than 1 mrad
  - Cavity longitudinal misalignment should be less than 10 mm

Alignment

- SPS
  - Alignment required for operation less than LHC
  - To limit SPS crymodule complexity (win time and limit risk)
    - No active alignment needed for SPS tests
    - Foresee a system for monitoring the cavity positions instead

Magnetic shielding

- Static magnetic field shielding required
  - The field to be below 1 μT at the outer surface of the cavity
  - Numerical simulations to determine the material thickness and specification, as well as geometry

Cryostating

- Integration into cryostat at CERN - most likely location SM18

Vittorio Parma talk tomorrow

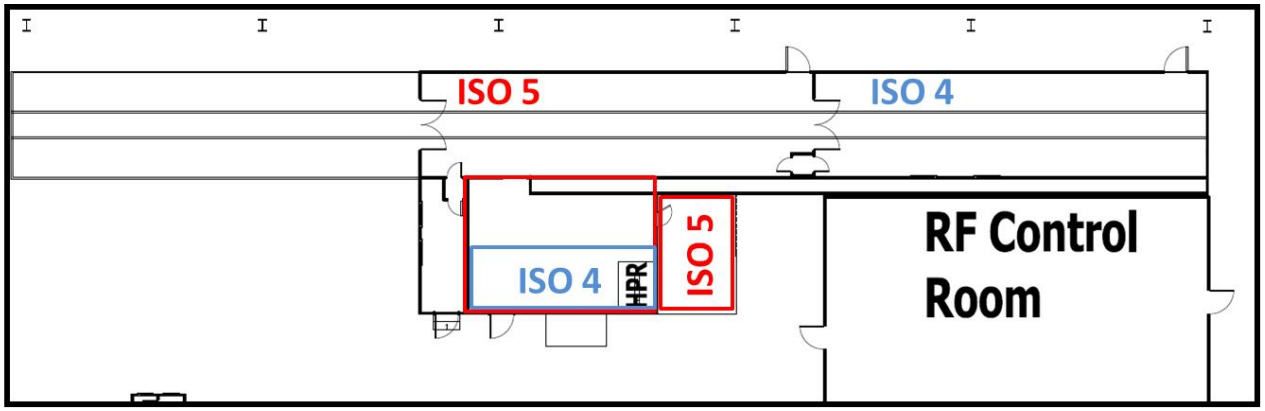

Top view of cleanroom upgrade

Réfection à terminer avant fin 2013

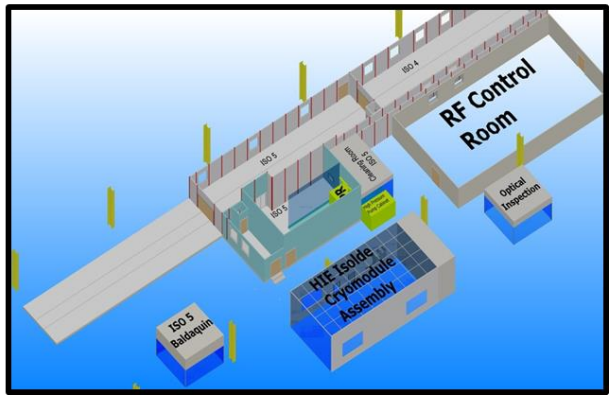

- Cold tests of full cryomodules in SM18 prior tunnel installation

Mathieu Therasse talk tomorrow

Couplers

- Fundamental Power Couplers
  - Talk by Eric Montesinos tomorrow
- Impedance budget and HOM power & couplers
  - Talk by Benoit Salvant tomorrow

Summary

- Bare cavities for SPS designed to be the same as for the LHC
- Dressed cavity for SPS tests design as much as possible compatible with LHC
- Conceptual design of SPS cryomodule for the 3 cavities
  - 2 identical cavities in 3 different cryomodule
  - Effort to standardize interfaces, basic choices in-between the 3 cryomodules
- The 3 SPS cryomodules could be tested in SM18 (if no down-selection since then)
- 1 or 2 cryomodules to be tested in SPS, after test in SM18
- SPS cryomodule design as much as possible compatible with the LHC