Dressed ODU/SLAC RF Dipole Cavity

HyeKyoung Park
Jean Delayen

Center for Accelerator Science
Old Dominion University

Overview

- Cavity mechanical study
  - Mechanical strength
  - Pressure sensitivity
  - Lorentz force detuning
  - Mechanical modes
- Tuning options
  - Cavity tuning range
  - Tuner layouts
  - JLAB mechanical tuner
  - Fermi/CEA tuner
- Helium tank options
  - Compact box type
  - Round vessel
- Wave guide
- Cryomodule integration
- Summary and Future plan
- Acknowledgement

Cavity view

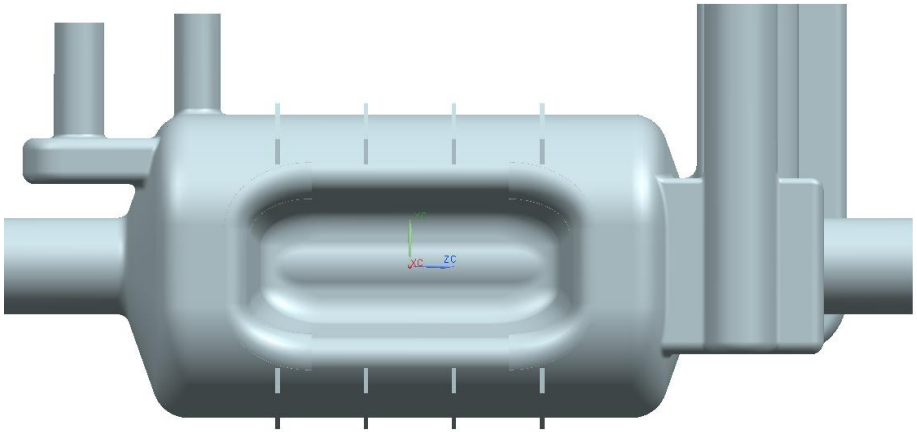

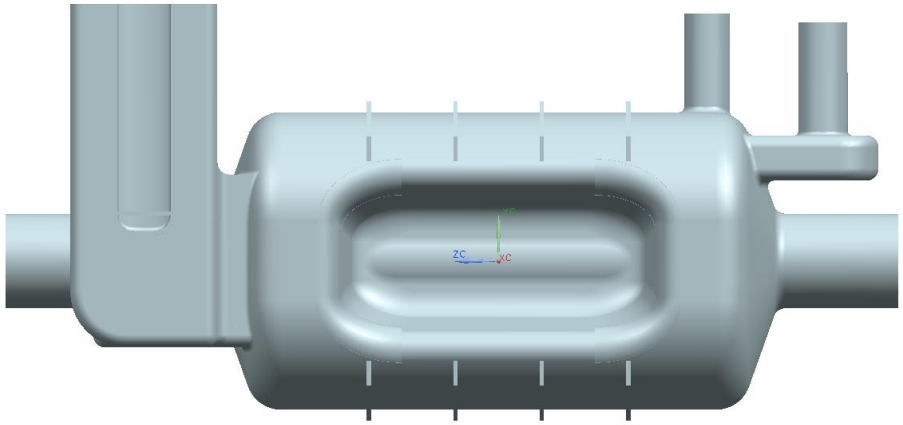

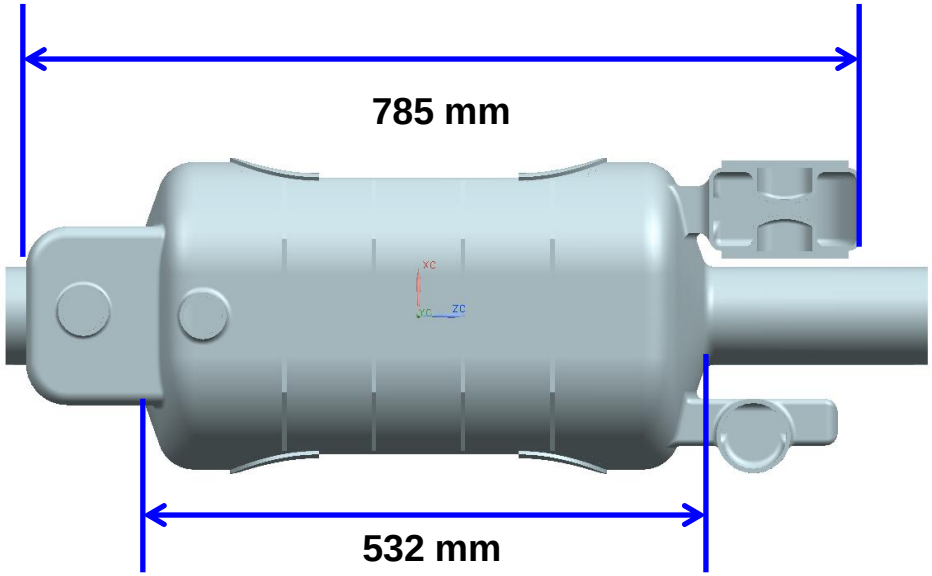

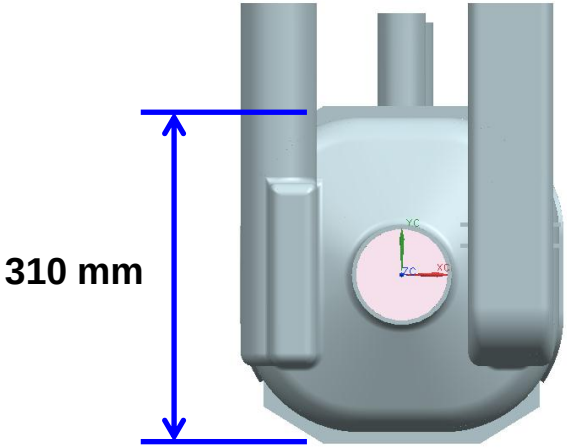

Mechanical analysis

Mechanical strength

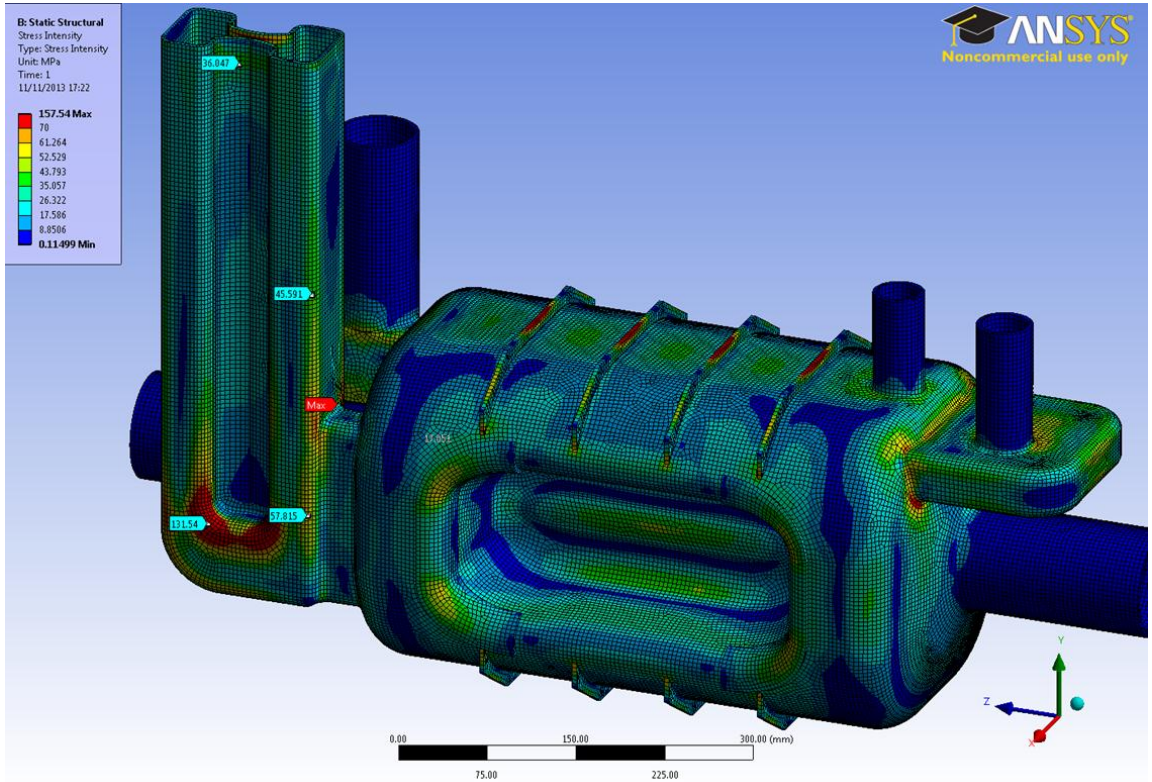

Checked by CERN Engineering Team
2.1 bar external pressure
Main body below 70MPa, high bending induced stress on curved surfaces

Mechanical analysis

Mechanical strength – most recent model

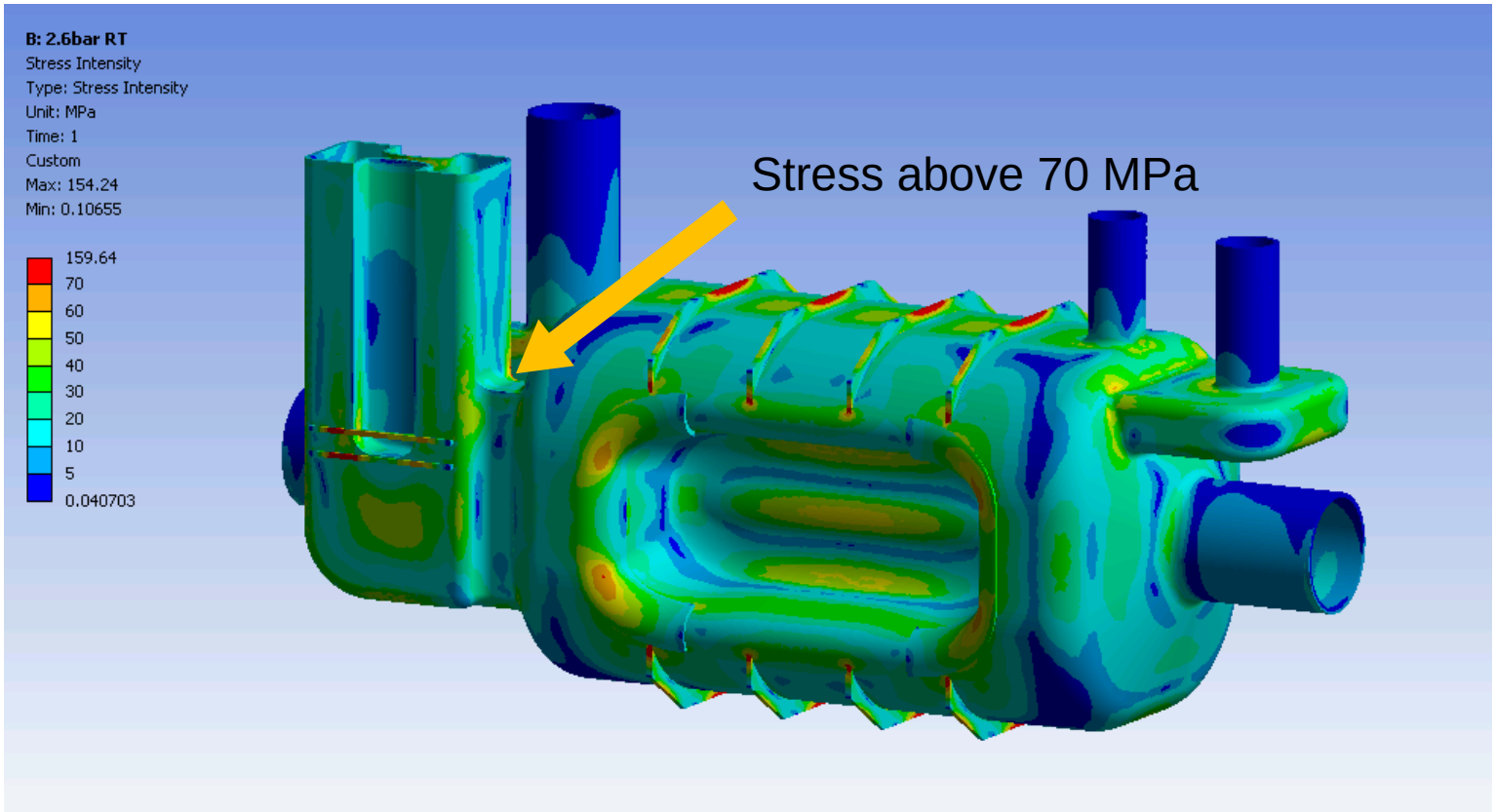

2.6 bar external pressure
Added stiffeners, 4 mm thick Nb strips
Localized high stress spot needs a treatment

Mechanical modes

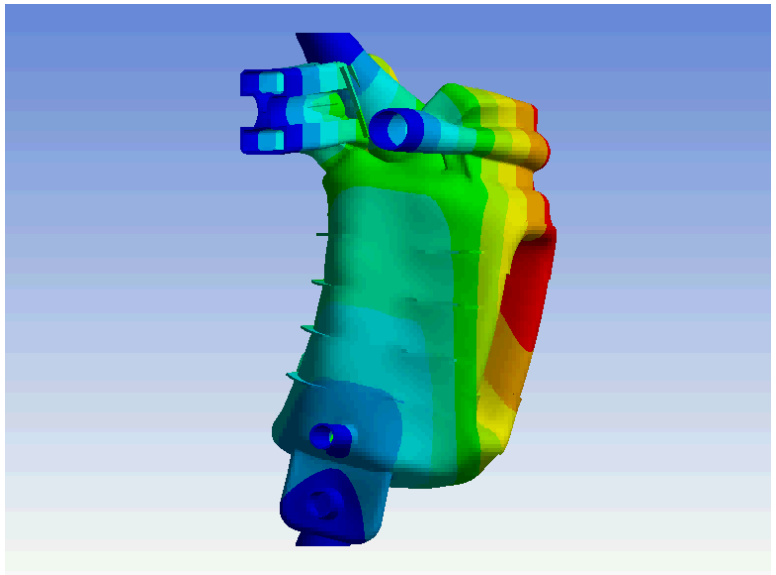

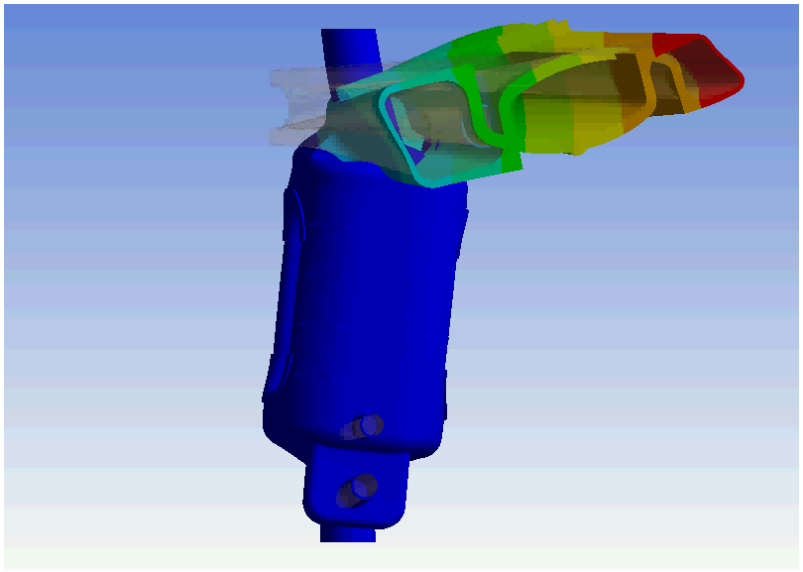

First mode ~ 300 Hz
Under 23 torr external pressure
All ports fixed

First mode ~ 100 Hz
Under 23 torr external pressure
Beam ports fixed

Mechanical mode frequencies high enough
- not a concern.

Frequency analysis

Target room temperature frequency before final assembly

Process	Frequency change (kHz)	Accumulative change (kHz)
Weld (0.25 mm shrink at two final seams)	+520	+520
BCP (100 μ)	+460	+980
Evacuation (23 torr external pressure)	-0.7	+979
Cool down (Nb TEC 0.5×10^{-5} K^{-1})	+840	+1819

- The frequency of fabricated cavity at room temperature should be accordingly adjusted from the nominal frequency at 2K.
- Stiffener welding recommended before final assembly

Cavity tuning

Tuning Sensitivity	+90 kHz/mm
Pressure Sensitivity	-30 Hz/torr
Lorentz Force Detuning	-80 Hz/(MV/m)^2

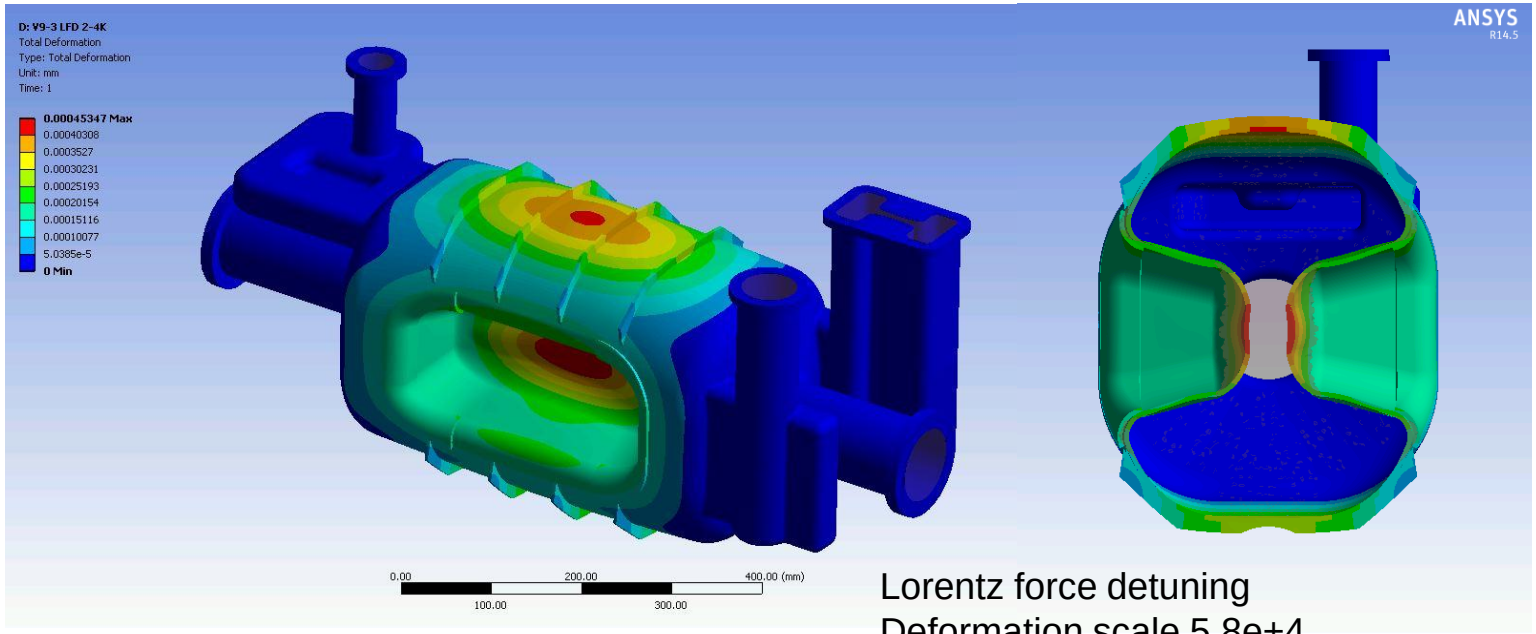

Lorentz force detuning
Deformation scale 5.8e+4

Niobium property at 2-4K

Tuning option

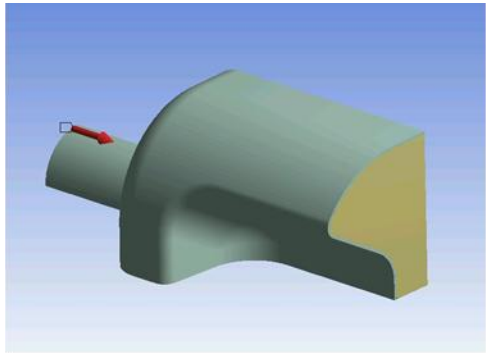

JLAB scissor jack tuner
CEA tuner
Currently focus

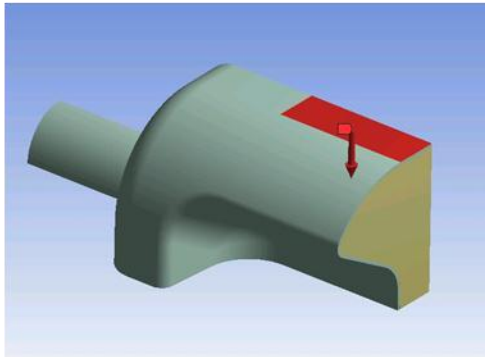

Push rod directly attached to the cavity
All instrumentation on one plane
Heat load?

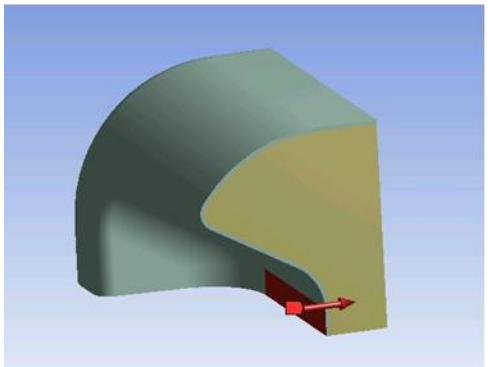

Tuning range – cavity only

Consideration 2K and CW operation

Available range ~200 kHz

Displacement (mm)	Force required (N)	Max stress (MPa)	Frequency change (Hz)	
1	18340	170	91722	Tension
2	36680	342	182667	
-1	18340	171	-92449	Compression
-2	36680	342	-185549	

- Cavity spring constant 0.05 μ/N
- One port fixed the other port pushed or pulled (changing side doesn't affect the values)
- Tuning sensitivity 90 kHz/mm
- Max stress occurs at the beam pipe neck (wave guide side)

Tuner option – JLAB scissor jack tuner

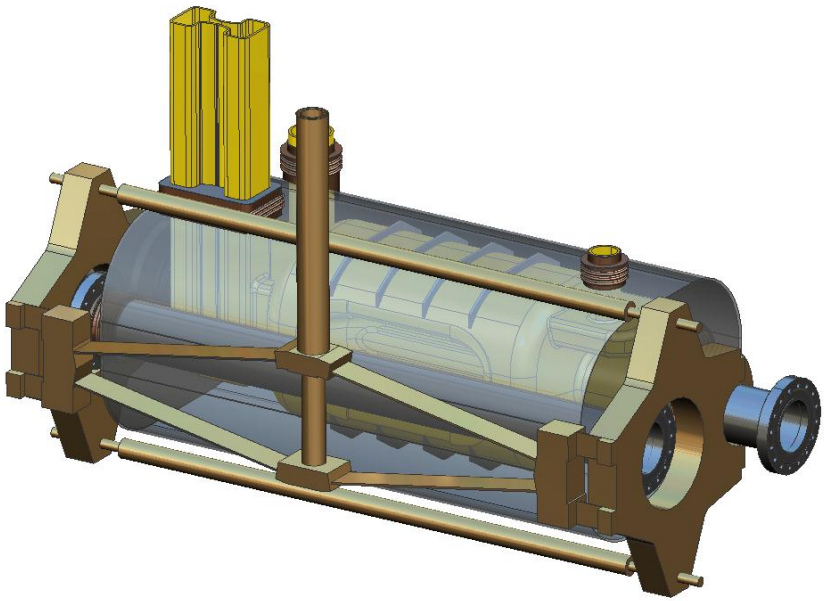

First considered design

Challenges :
Configuration has to change when the cavity rotates.
Increase envelop size both longitudinal and transverse direction

Tuner option – Fermilab design

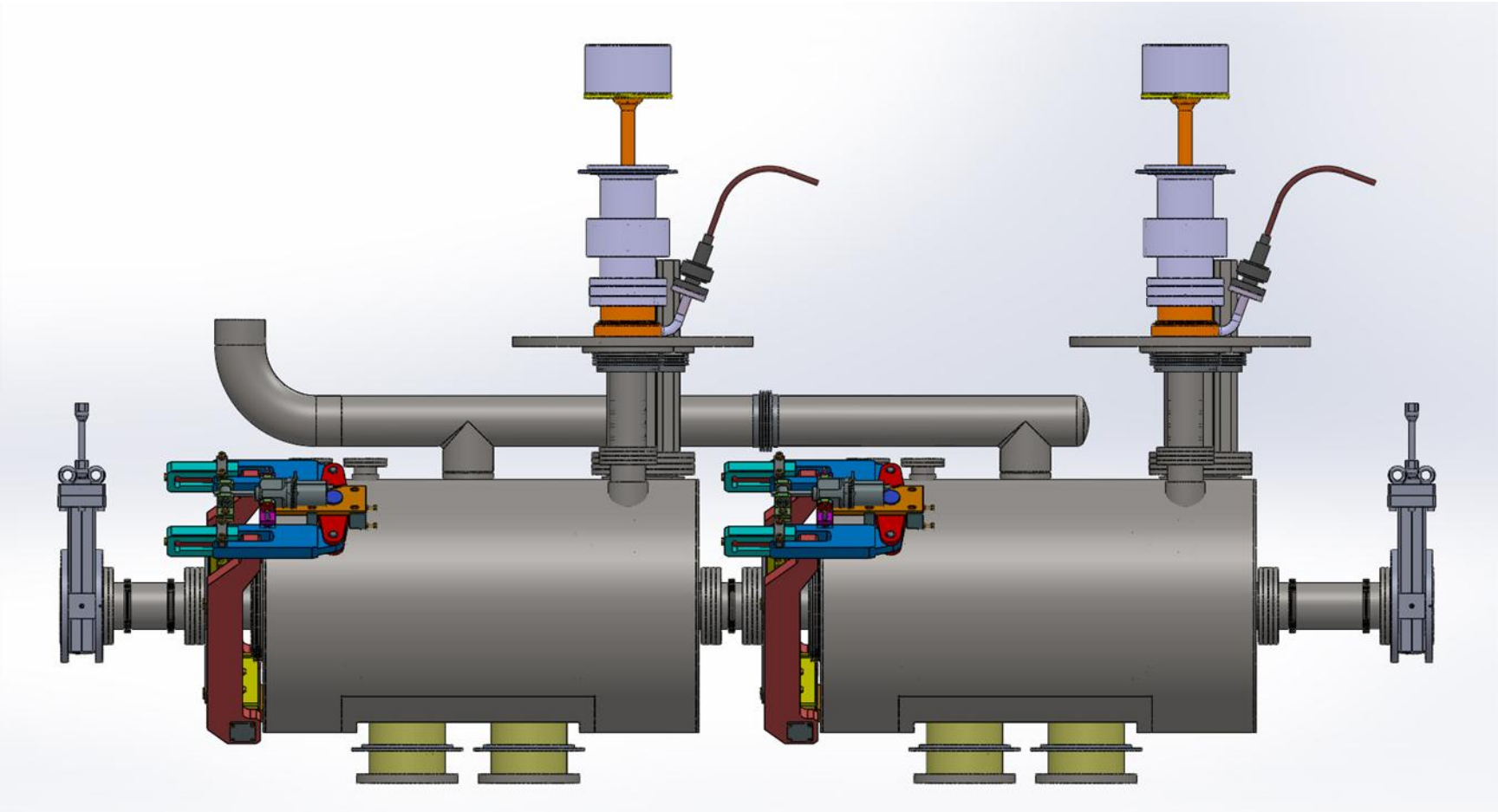

Tom Nicol/Fermilab

Tuner option – CEA tuner

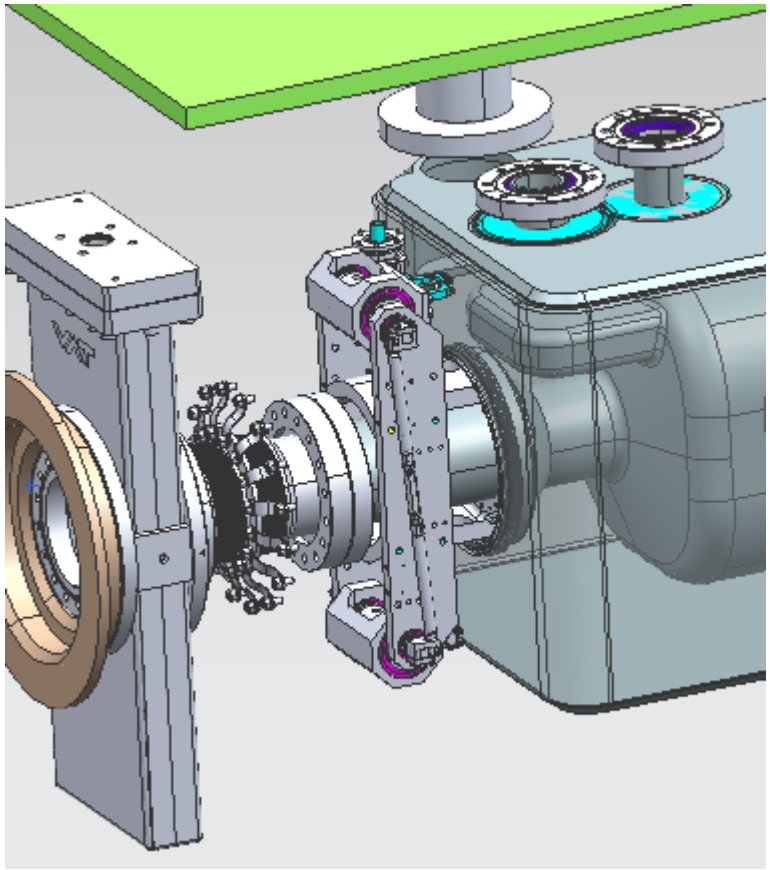

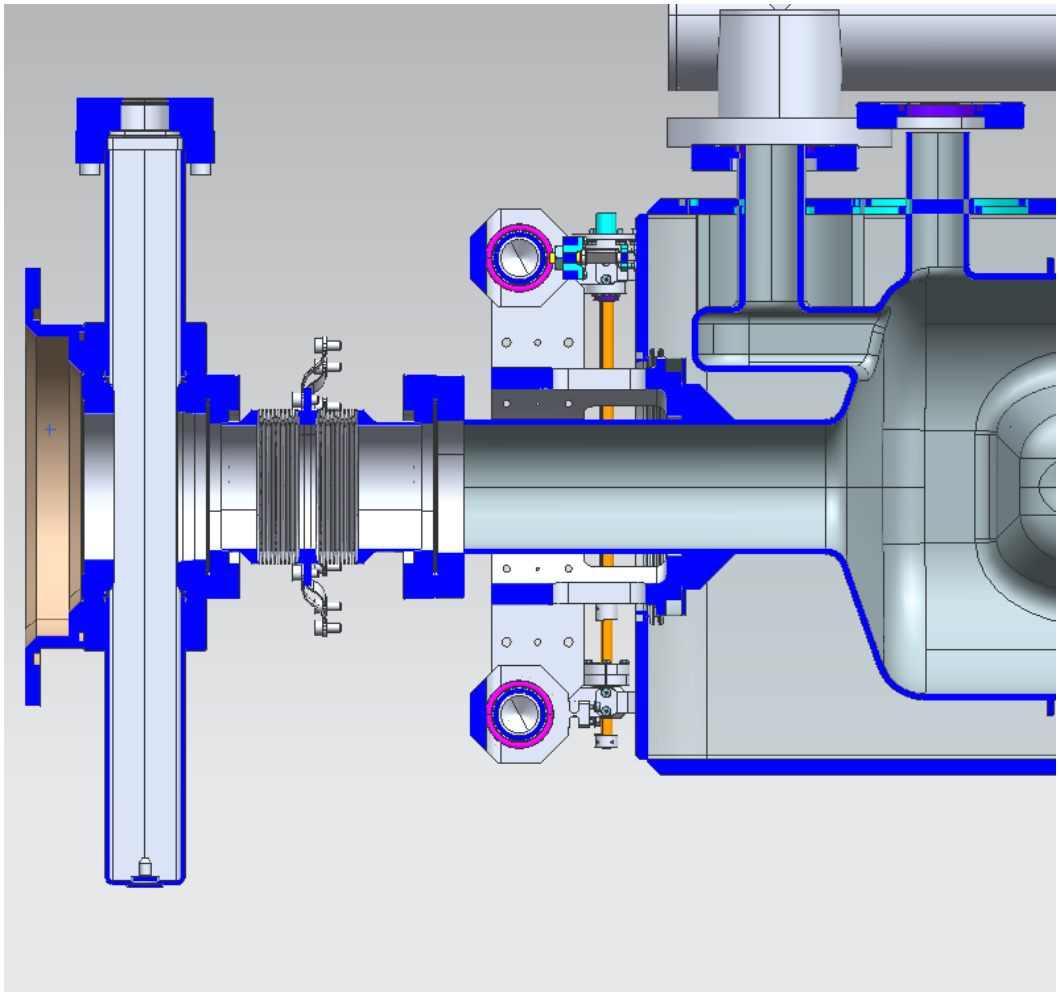

Helium tank options

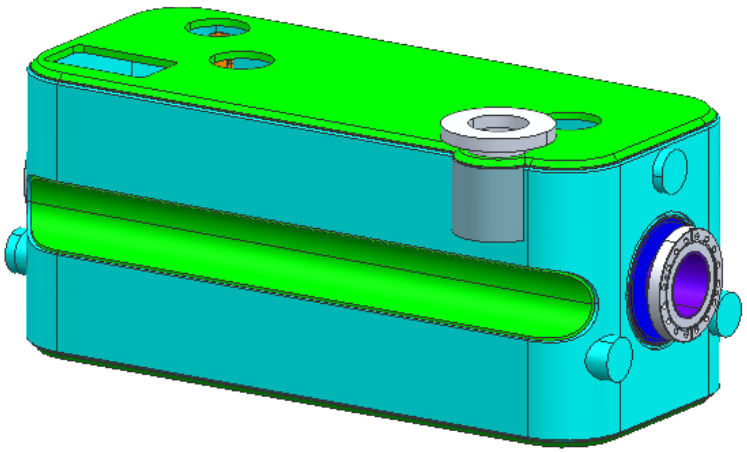

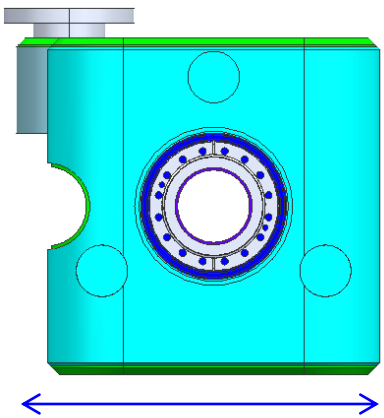

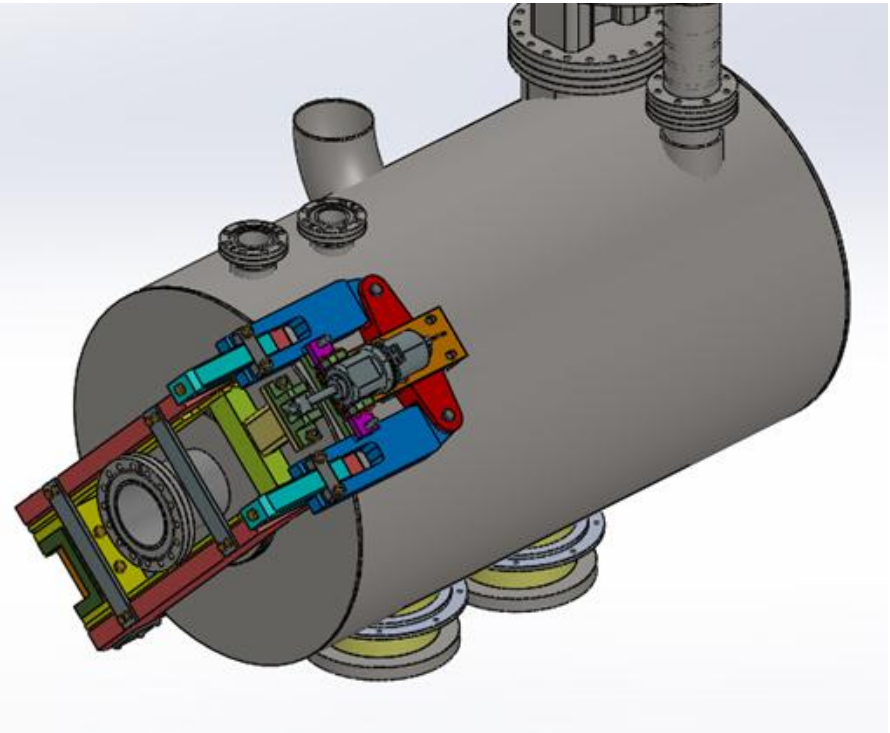

Wave guide

Wave guide transition and length – preliminary study

- Evanescent field : 250mm Niobium under Helium
- Conduction heat load : 1.3 W assuming 2mm thick 340mm long wave guide with 1 optimized 80K heat interceptor outside Helium tank (Federico Carra/CERN)

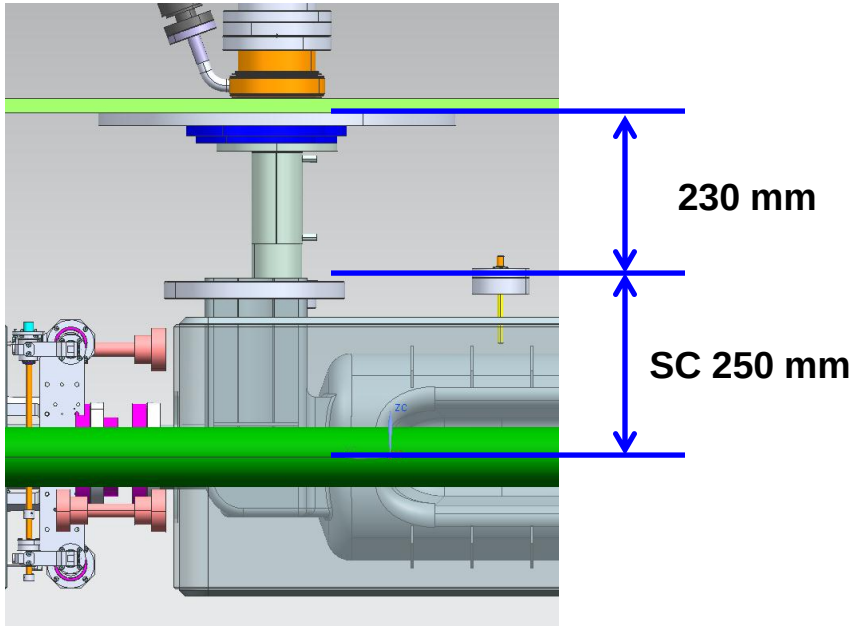

Longer wave guide length is needed to decrease the conduction heat load

Challenge:
Little headroom in current cryomodule

Wave guide

Wave guide extending outside cryomodule

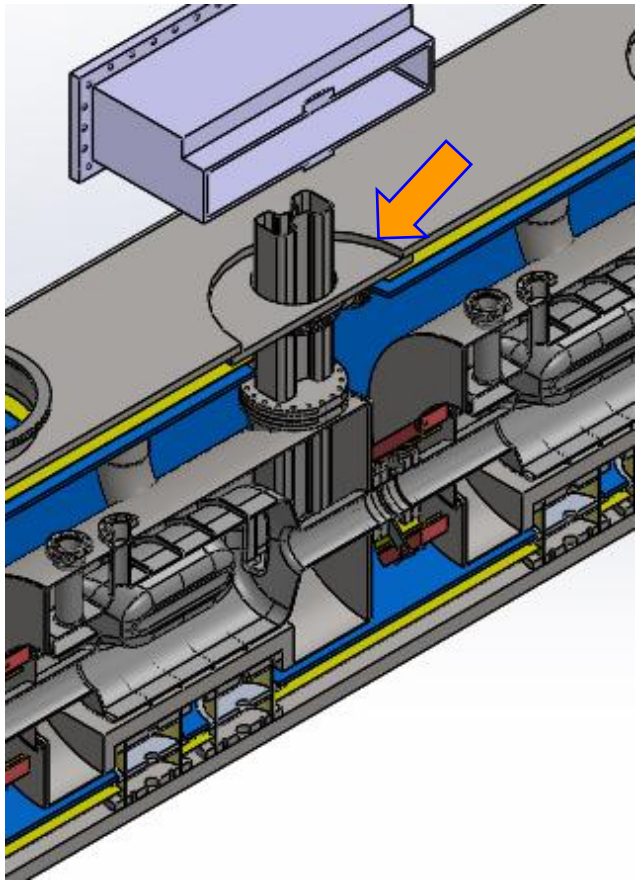

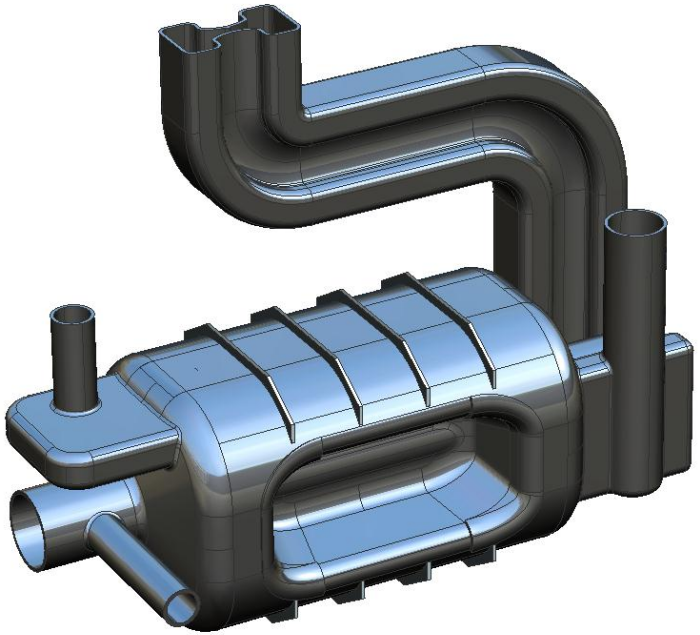

Or going arty?
Just kidding

Wave guide

Improvement 1

- Decrease the wave guide thickness
- 1 mm thick stainless steel wave guide is structurally sufficient

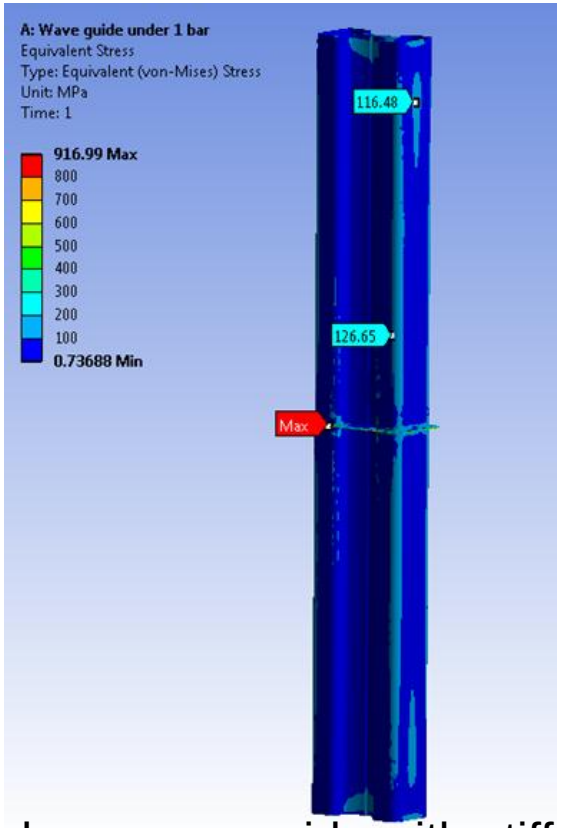

1 m long wave guide with stiffener

Improvement 2

- Bellowed wave guide
- Wave guide cross section will be simplified after the evanescent filed decay

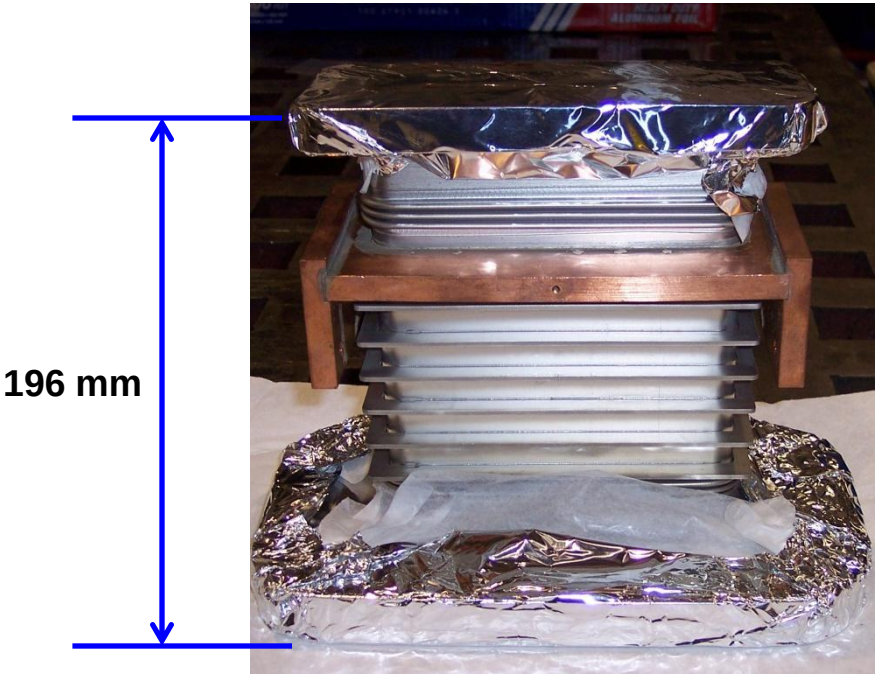

13kW FPC wave guide / JLAB

Wave guide / window

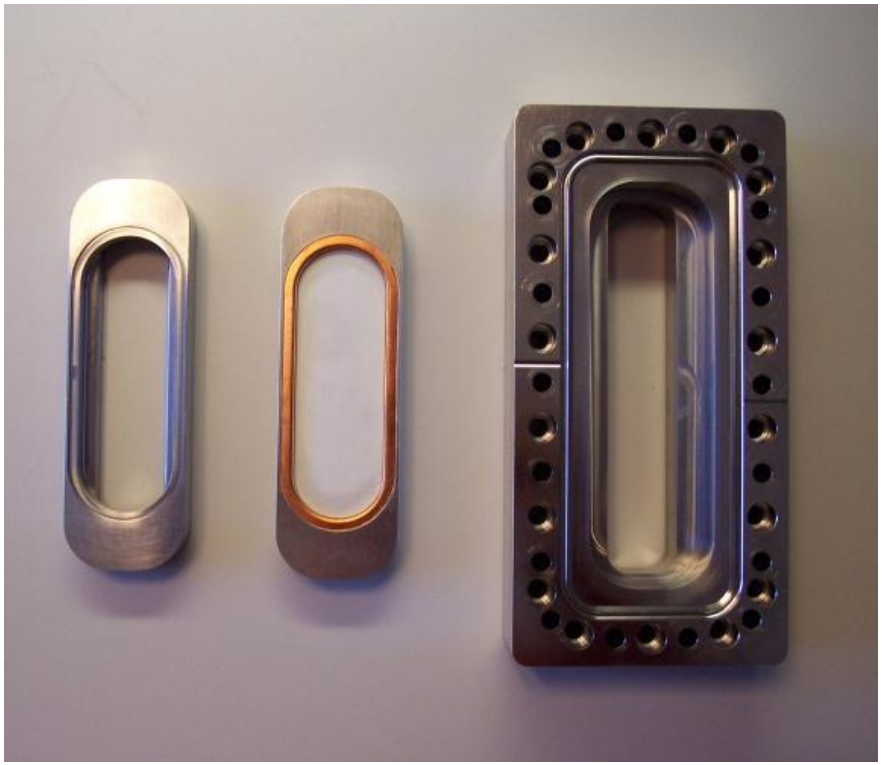

Standard circular flanges are preferred.
Rectangular knife edge flanges are also reliably used at JLAB.
RF gasket at first connection

Integration – peek preview

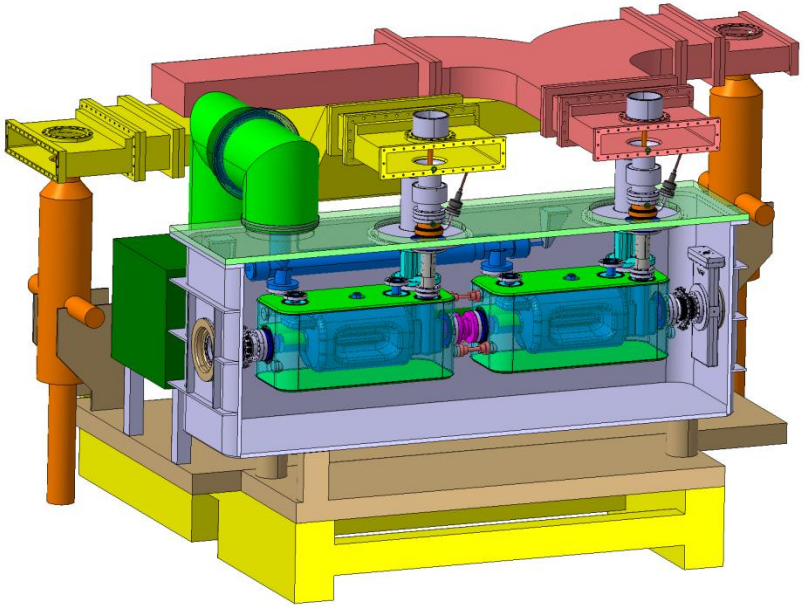

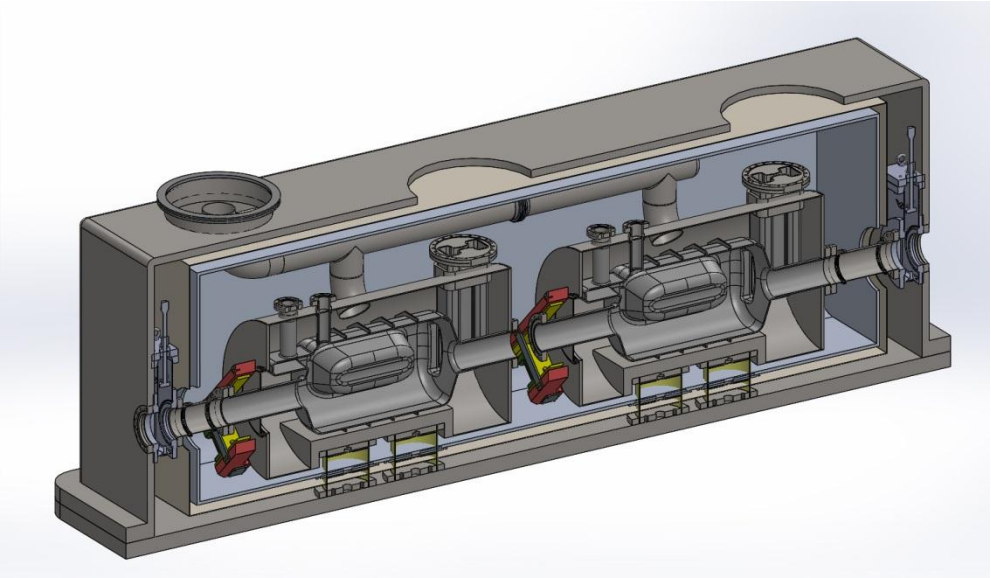

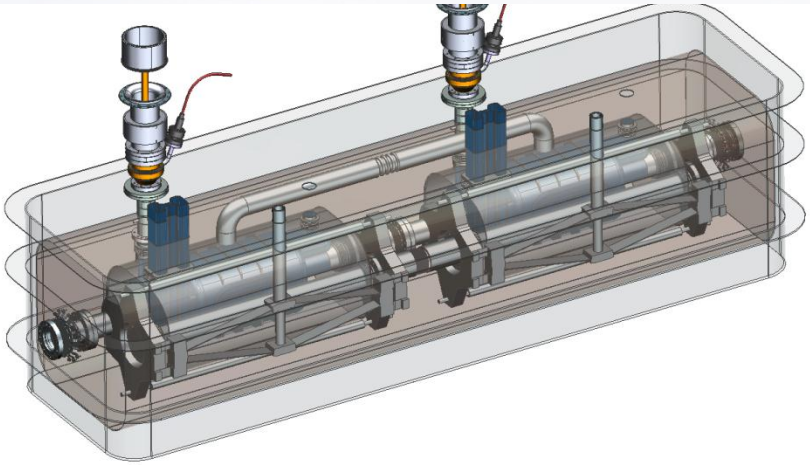

Detail will follow from Tom Nicol

Summary and plan

- Progress so far
  - Validation of proof of principle
  - Cavity characterization
  - Study results to be used for engineering and fabrication
  - Multiple tuning and Helium tank options were explored
  - Space requirement is satisfied
- Next step forward
  - Complete cavity characterization focus on thermal and tuning
  - Down select cryostat design : design review with CERN and Fermilab
  - Engineering analyses of the selected design. Both CERN and Fermilab's engineering expertise required.
  - Cavity fabrication

Acknowledgement

Thank you for your contribution!

- Subashini De Silva, Rocio Olave
- CERN Engineering team
- Shrikant Patalwar, Thomas Jones / Daresbury
- Thomas Nicol / Fermilab, US LARP
- Zenghai Li / SLAC
- James Henry, Joe Matalevich / JLAB