DOUBLE QUARTER-WAVE CRAB CAVITY PROTOTYPE FOR SPS AND ITS HELIUM VESSEL

Silvia Verdú-Andrés *on behalf of*

(BNL) Sergey Belomestnykh, Ilan Ben-Zvi, John Skaritka, Binping Xiao, Qiong Wu
(CERN) Luis Alberty, Rossana Bonomi, Rama Calaga, Ofelia Capatina, Federico Carra, Giuseppe Foffano, Raphael Leuxe, Thierry Renaglia
(SLAC) Zenghai Li

Work partly supported by the EU FP7 HiLumi LHC grant agreement No. 284404 and by the US DOE through Brookhaven Science Associates, LLC under contract No. DE-AC02-98CH10886 with the US LHC Accelerator Research Program (LARP). This research used resources of the National Energy Research Scientific Computing Center, which is supported by the US DOE under contract No. DE-AC02-05CH11231.

Outline

- **The Double-Quarter Wave concept**
- **SPS DQWCC prototype**
  - Spatial constraints in LHC tunnel
  - Fields (Vt, Emax, Bmax, Eoff), HOMs (1st HOM freq, etc.), Figures of Merit (R/Q, G)
  - Multipacting studies with ACE3P (Z. Li, SLAC)
- **Cavity ancillery**
  - FPC and HOM hooks, pick-up antenna
  - HOM filter (B. P. Xiao, BNL)
- **Helium vessel concepts for the SPS DQWCC** (BNL-CERN)
  - Titanium vessel
  - Stainless-steel vessel
  - Integration into cryomodule
- **Summary and outlook**

Field distribution in a (double) quarter wave cavity

Electric field

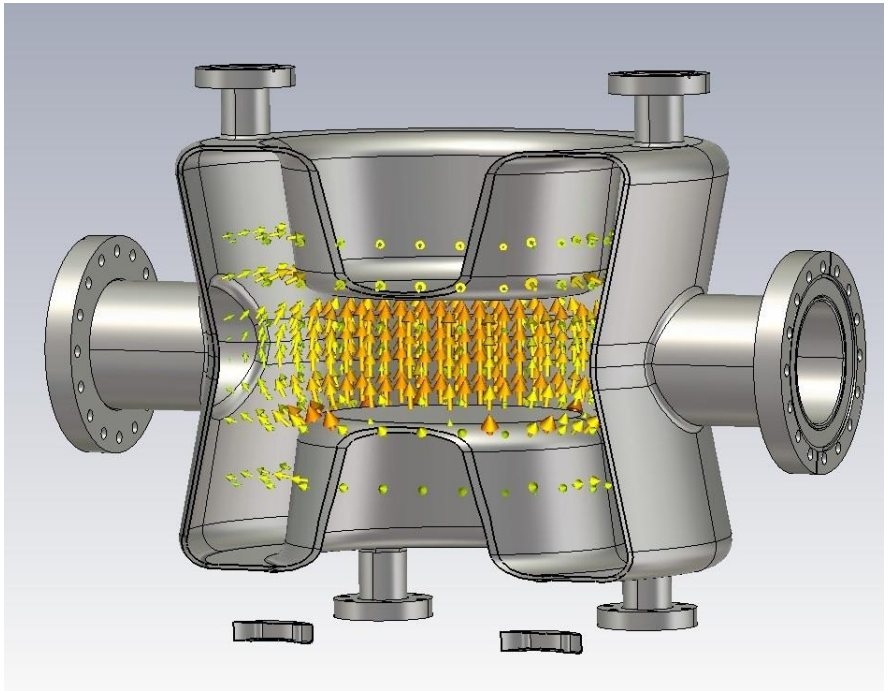

Magnetic field

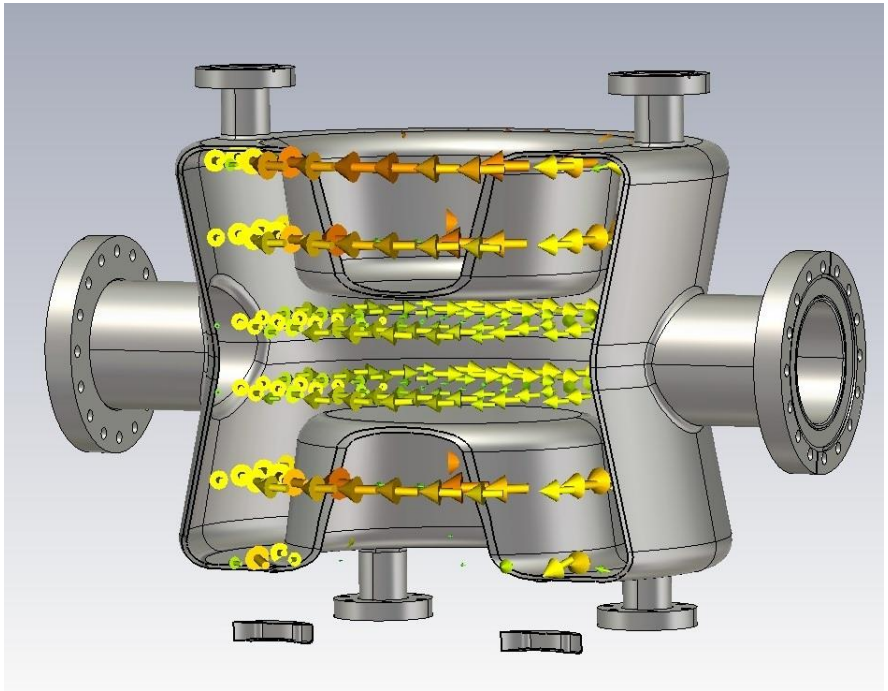

Cavity layout and dimensions

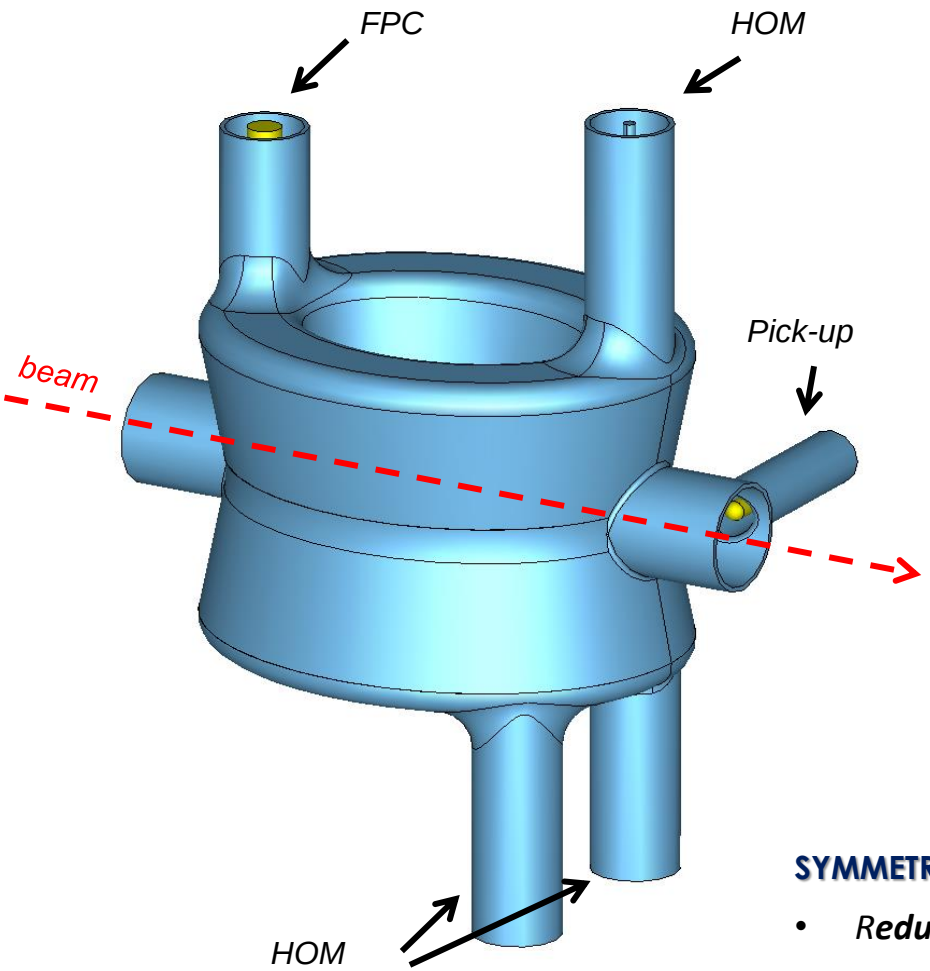

SYMMETRIC PORT CONFIGURATION [HiLumi April 2013]

- ***Reduced multipolar components*** *and*

  lowest external Q of High Order Modes (HOM) up to 2 GHz.
- *Three HOM dampers enough to damp HOMs.*

Cavity layout and dimensions

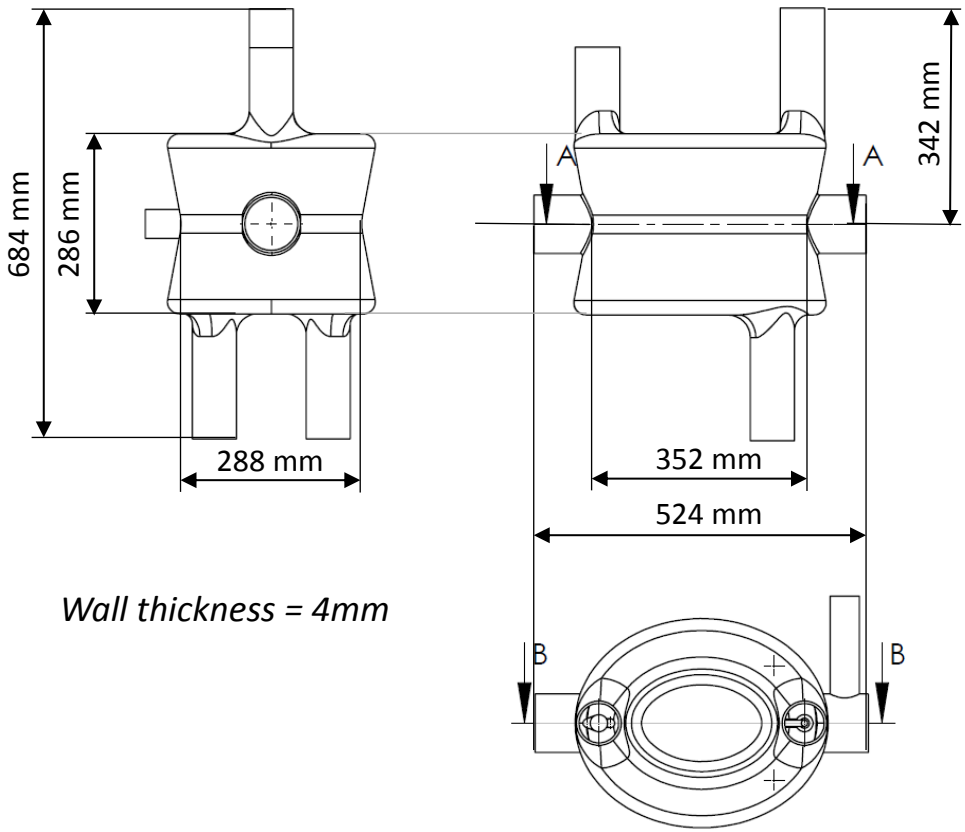

Wall thickness = 4mm

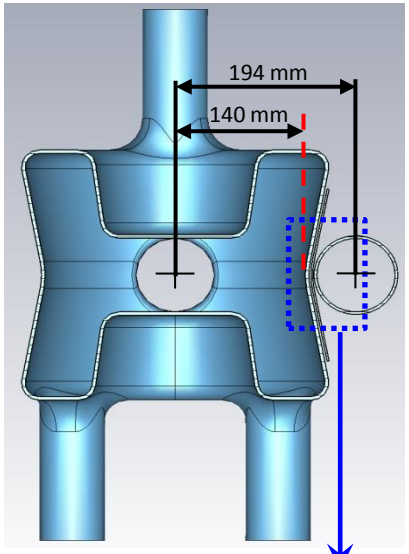

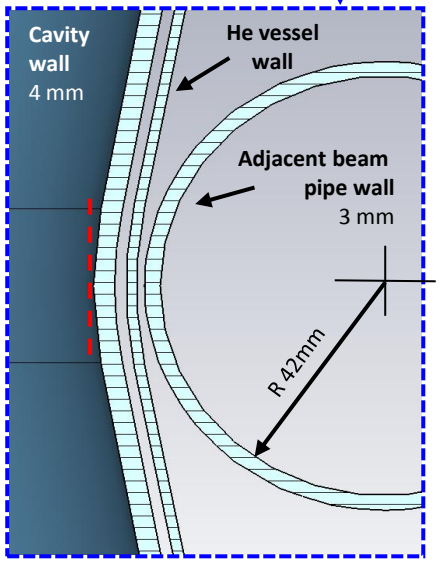

COMPACT DESIGN – CLEARANCE at LHC

Design is suited for both vertical and horizontal kick configurations at LHC.

Electromagnetic quantities

MODES			
Fundamental frequency (crab mode frequency)	f_0	400	MHz
First HOM frequency	f_1	580	MHz
FIGURES OF MERIT			
Transversal R/Q	R_t/Q	430	Ohm
Geometry factor	G	89	Ohm
FIELDS			
Maximum peak surface electric field	E_{max}	37	MV/m
Maximum peak surface magnetic field	H_{max}	69	mT
Accelerating voltage	V_{acc}	15	kV
OTHER			
Field center offset	$\mathcal{O}_{field}$	0.22	mm
Stored energy	U	10	J

* Scaled for nominal deflecting voltage Vt of 3.3 MV per cavity. CST-MWS simulations.

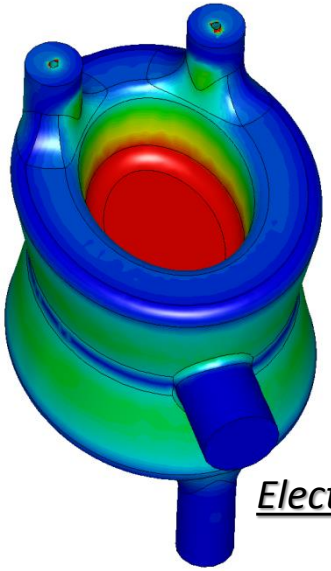

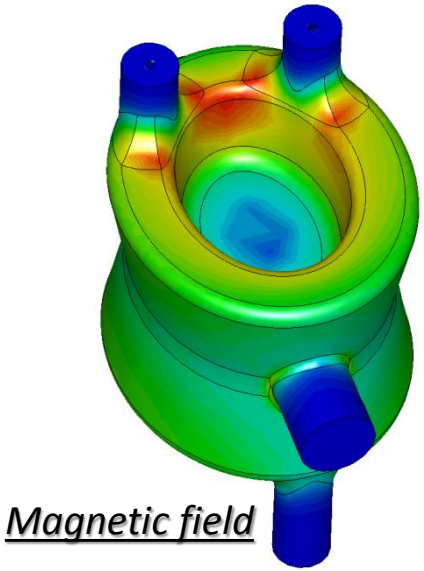

Cavity-ports interface

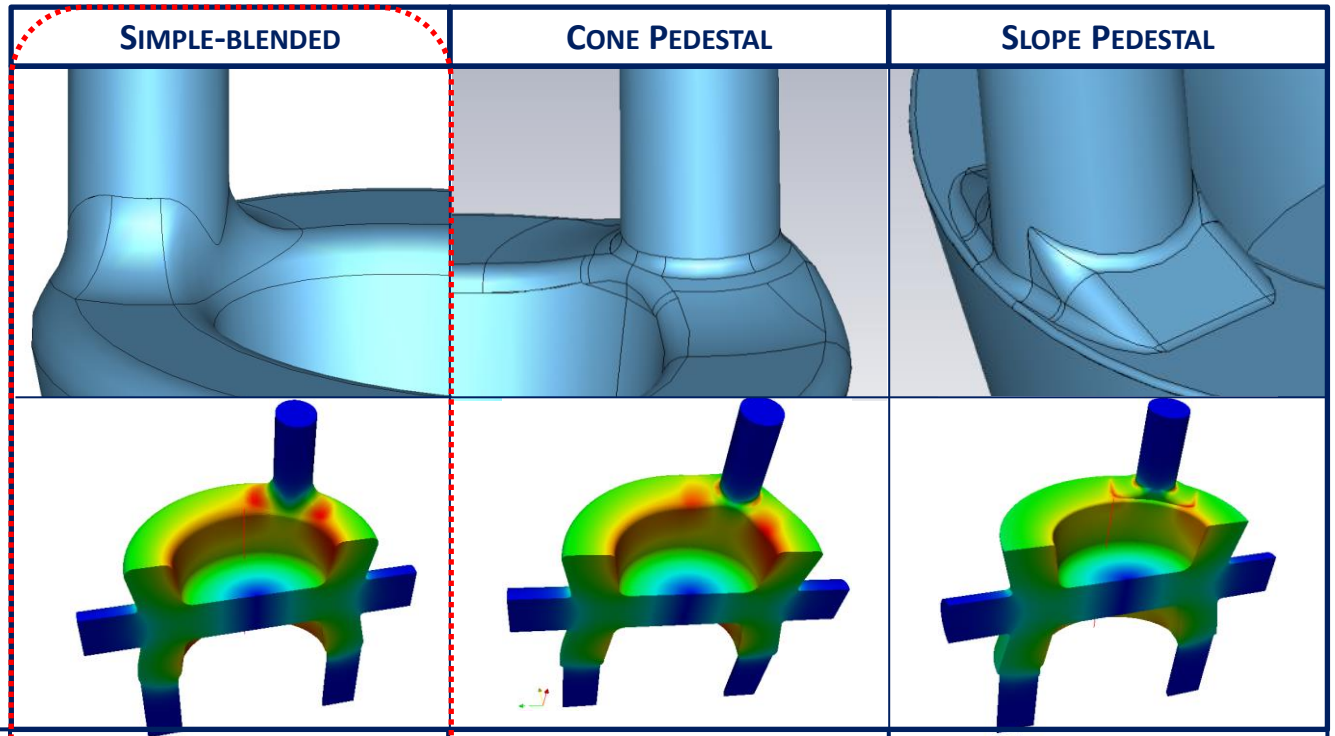

	Simple-blended	Cone Pedestal	Slope Pedestal
E_{max} [MV/m]	39.6	38.8	38.1
B_{max} [mT]	69.3	69.8	89.7
$\mathcal{O}_{field}$ [mm]	0.51	0.62	0.53

* Values scaled for Vt=3.3 MV. ACE3P Omega 3P simulations [SRF2013].

LARGE APERTURE PORT-CAVITY INTERFACE *to reduce center offset and peak surface magnetic field.*

The ***simple-blended model*** *was chosen due to* ***reduced*** *peak* ***surface magnetic field*** *and* ***simple manufacturing****.*

Cavity-ports interface

PoP DQWCC cold test (**SEE BINPING XIAO'S TALK**)

Quench at pick-up for deflecting voltage of 4.6MV (B_{max}=110mT) →

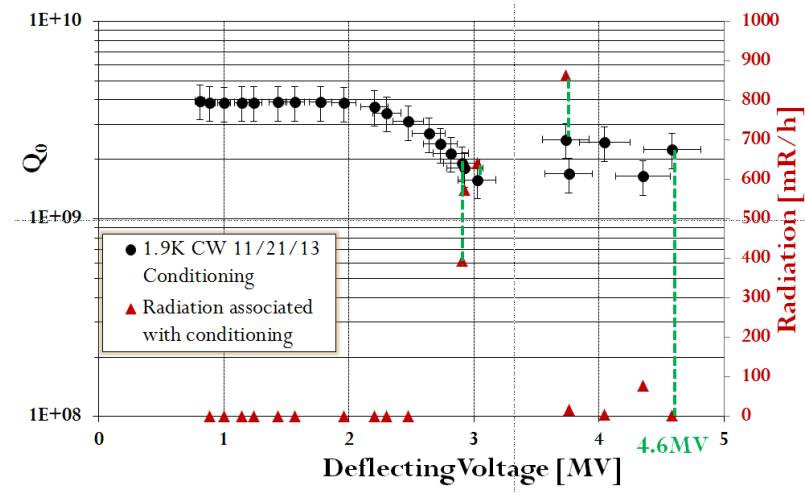

SPS DQWCC design

Larger port aperture for reduced peak surface magnetic field.

	PoP DQWCC	SPS DQWCC
	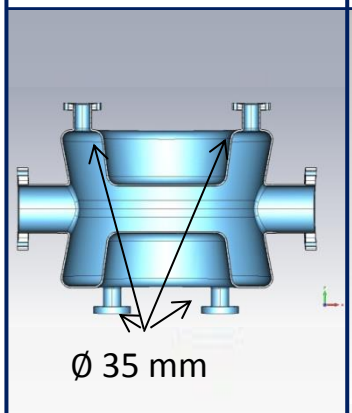	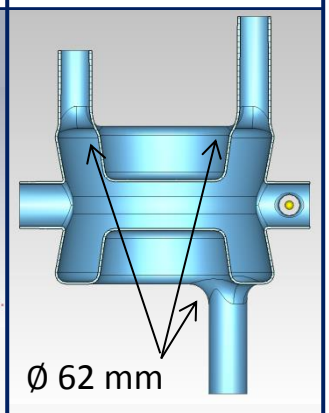
R_t/Q [Ohm]	400	430
G [Ohm]	85	89
E_{max} [MV/m]	38	37
B_{max} [mT]	79	69

* Values scaled for Vt=3.3 MV.

→ Quench for **SPS DQWCC extrapolated** to About **5.3 MV** deflecting voltage using the measured quench voltage of the demo cavity (~ 14% higher voltage).

Cavity ancillary: HOM hooks

H-field

f(0)

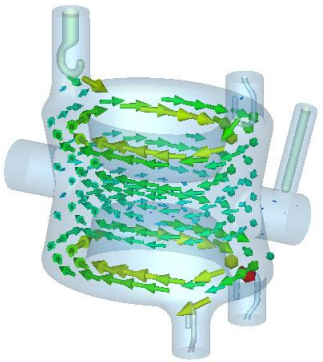

f(1)

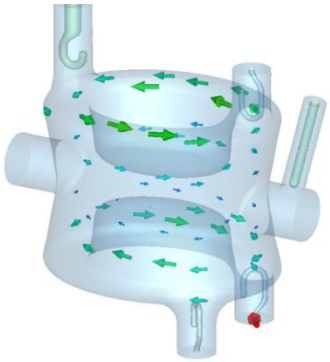

f(2)

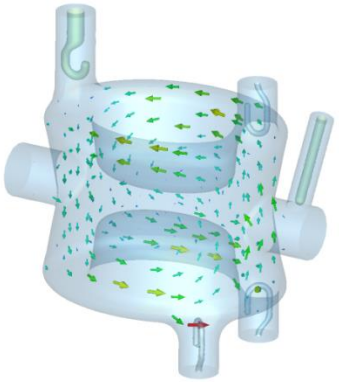

HOM HOOK DESIGN – REDUCED B_{max} FOR Qext ∈ [200, 2000]

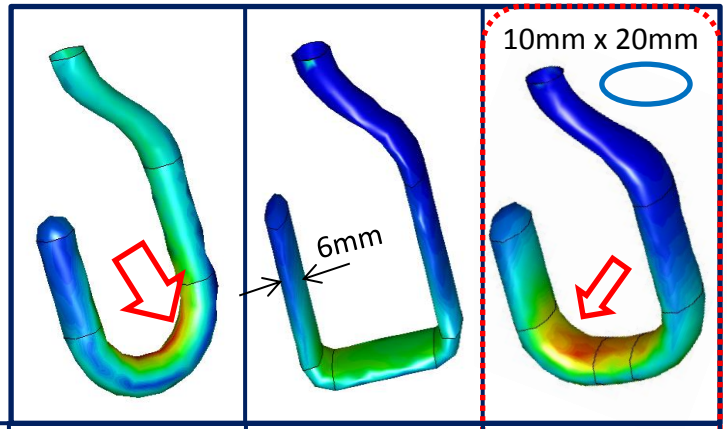

Q(1)	900	641	583
Q(2)	1160	754	602
$\mathcal{O}_{field}$ [mm]	0.23	0.22	0.22
B_{max} [mT]	80	47	50

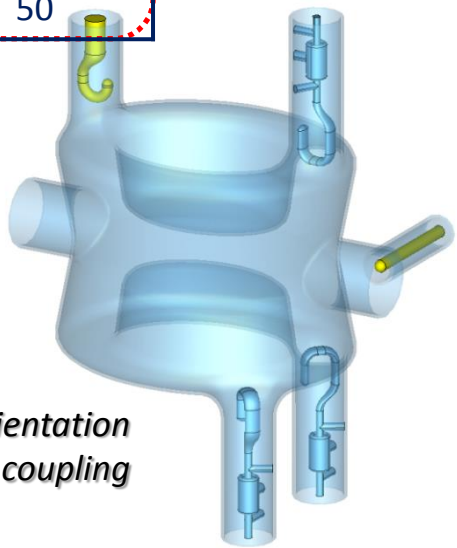

Hooks orientation for maximum coupling

Cavity ancillary: HOM filter (Binping Xiao, BNL)

*The fundamental mode is used as the deflecting mode → high-pass filter → **Chebyshev-type filter***

ONE-STAGE FILTER	TWO-STAGE FILTER
• Compact, easy to be cooled. • Hard to assemble and tune.	• 62mm-diameter, 115mm-long • Wide stop band, no need to tune • Simpler fabrication and cooling

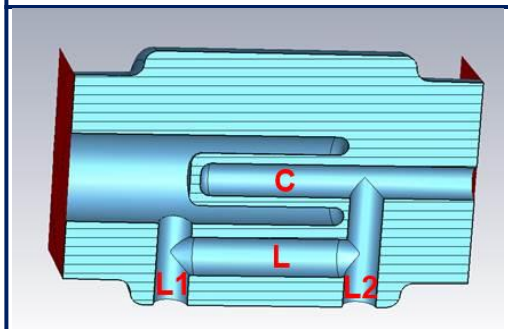

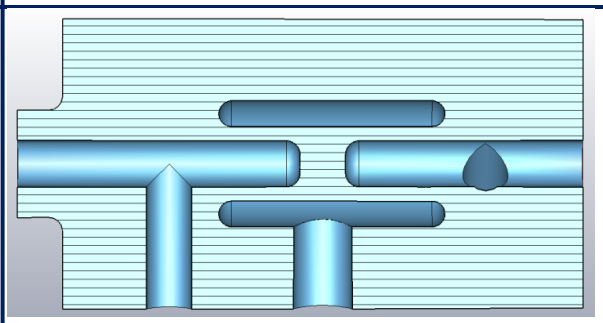

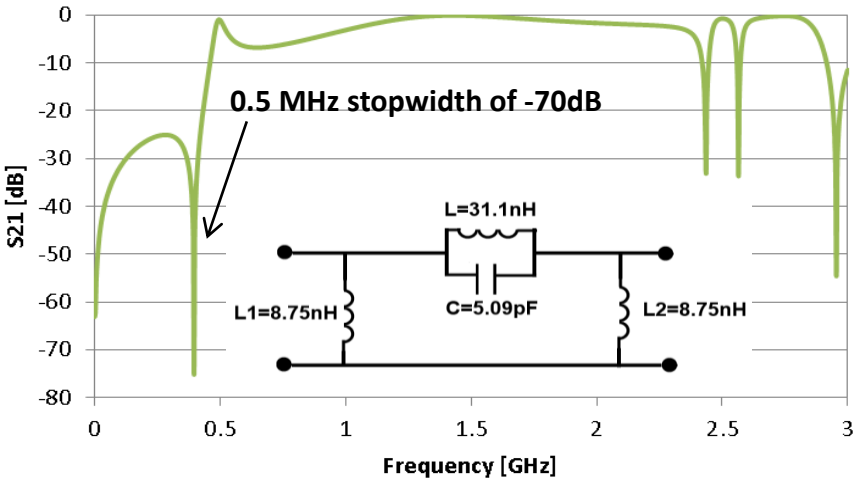

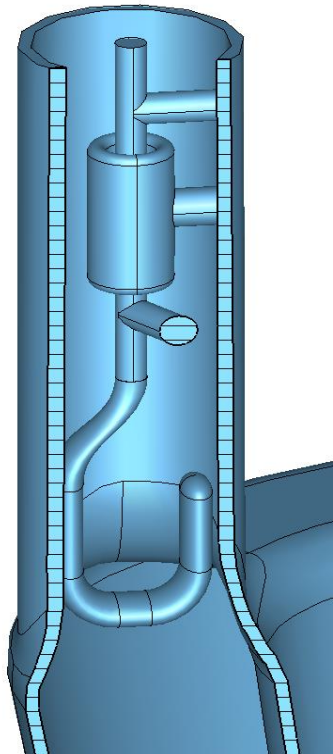

Cavity ancillary: HOM filter (Binping Xiao, BNL)

✓ ***Two-stage filter***

Wide stop band (more than **47MHz** @ -80dB)

- *fundamental mode frequency* (400 MHz): -88dB
- *first HOM frequency* (580 MHz): -3.48dB

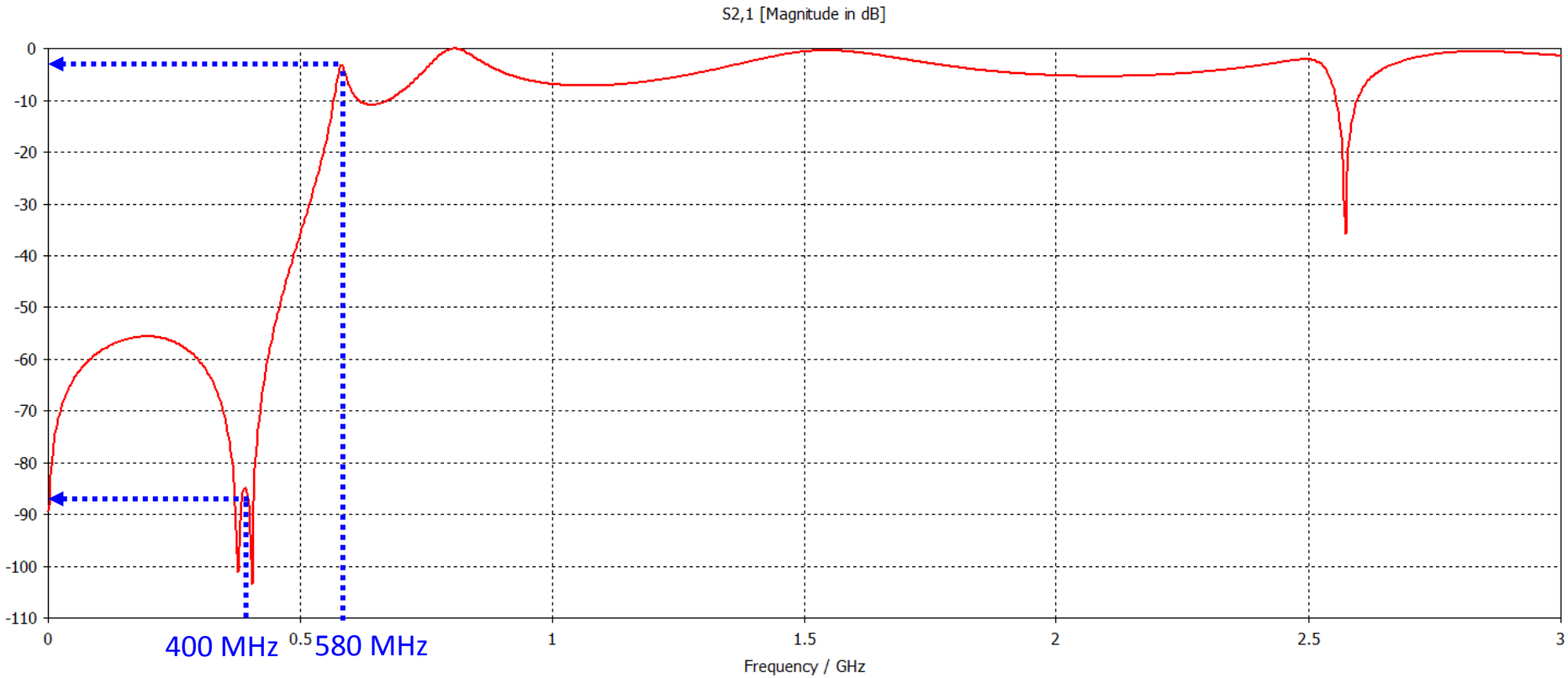

Cavity ancillary: HOM filter (Binping Xiao, BNL)

Two-stage filter

Assuming assembly errors
±0.25mm and ±0.25°

Wide stop band (more than **47MHz** @ -80dB)

- *fundamental mode frequency* (400 MHz): -88dB → -70dB
- *first HOM frequency* (580 MHz): -3.48dB → -4.5dB

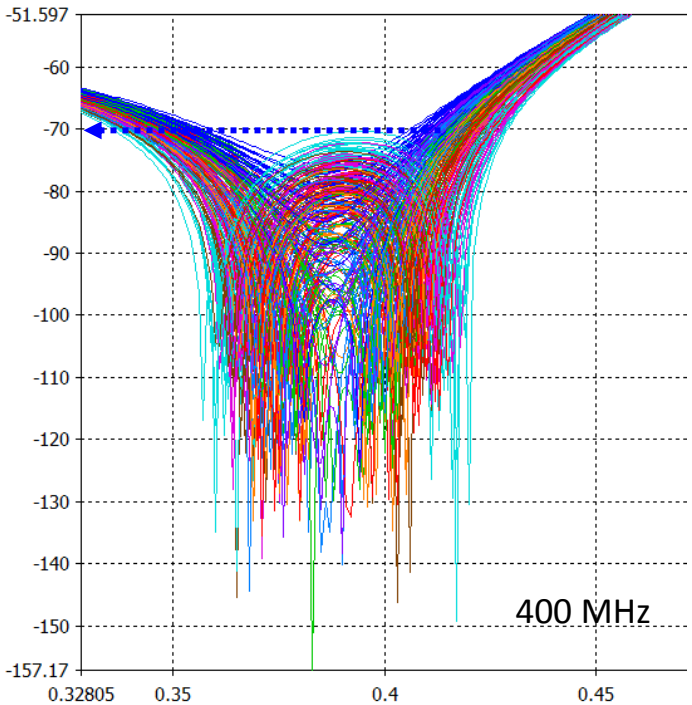

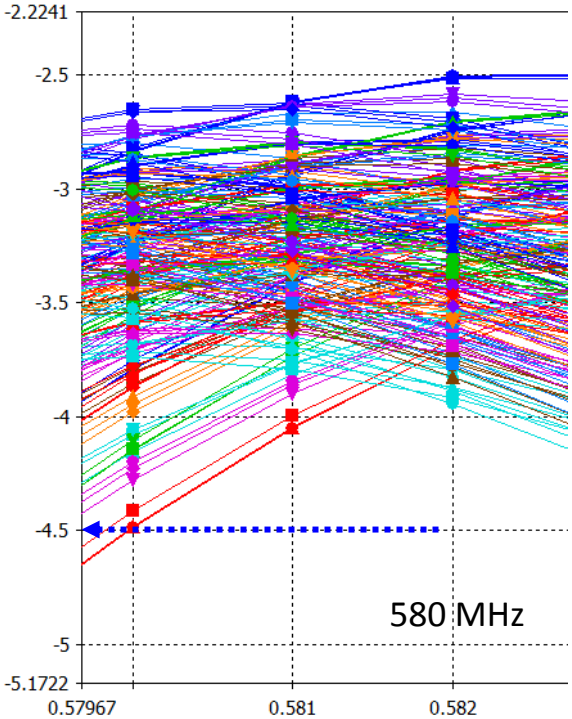

Cavity ancillary: FPC hook and pick-up antenna

✓ ***FPC hook:*** *$Qext^{f(0)} = 8x10^5$, 40 kW power supply is enough to feed the cavity*

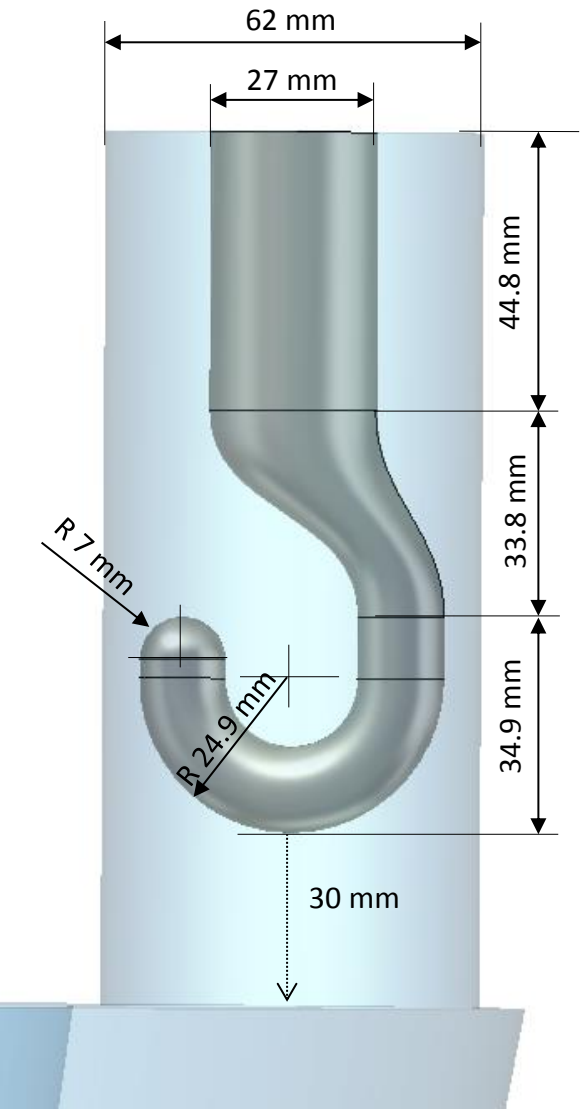

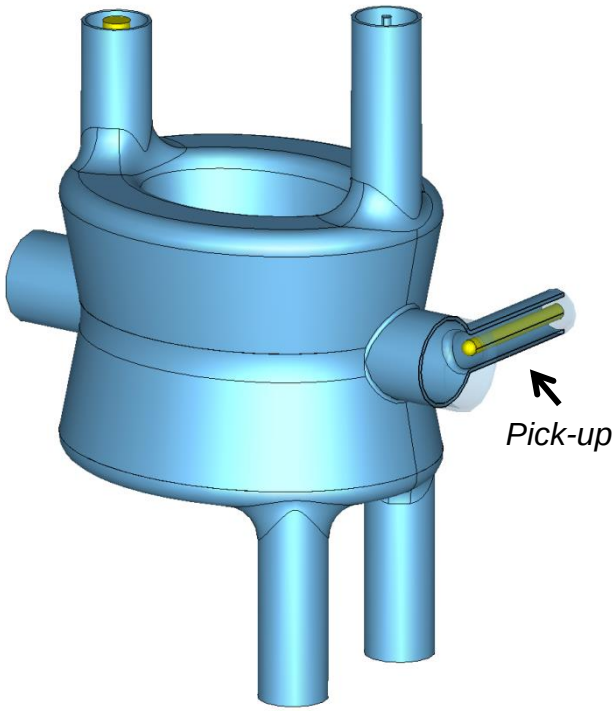

- CF35 flange (I.D. 19 mm). Coaxial line 50 Ohm.
- On beam pipe to maintain symmetric cavity configuration.

✓ ***Pick-up antenna:*** *$Qext^{f(0)}$ about $3x10^{10}$, enough to extract about 1W of fundamental mode.*

Port length

✓ ***FPC port:*** 230mm-long port for reduced power losses in flange interconnection (54mW) and reduced static heat losses in double-wall FPC tube

✓ ***Beam ports:*** long enough to reduce power losses in flange interconnection to 1mW/port

✓ ***HOM ports:*** filter position

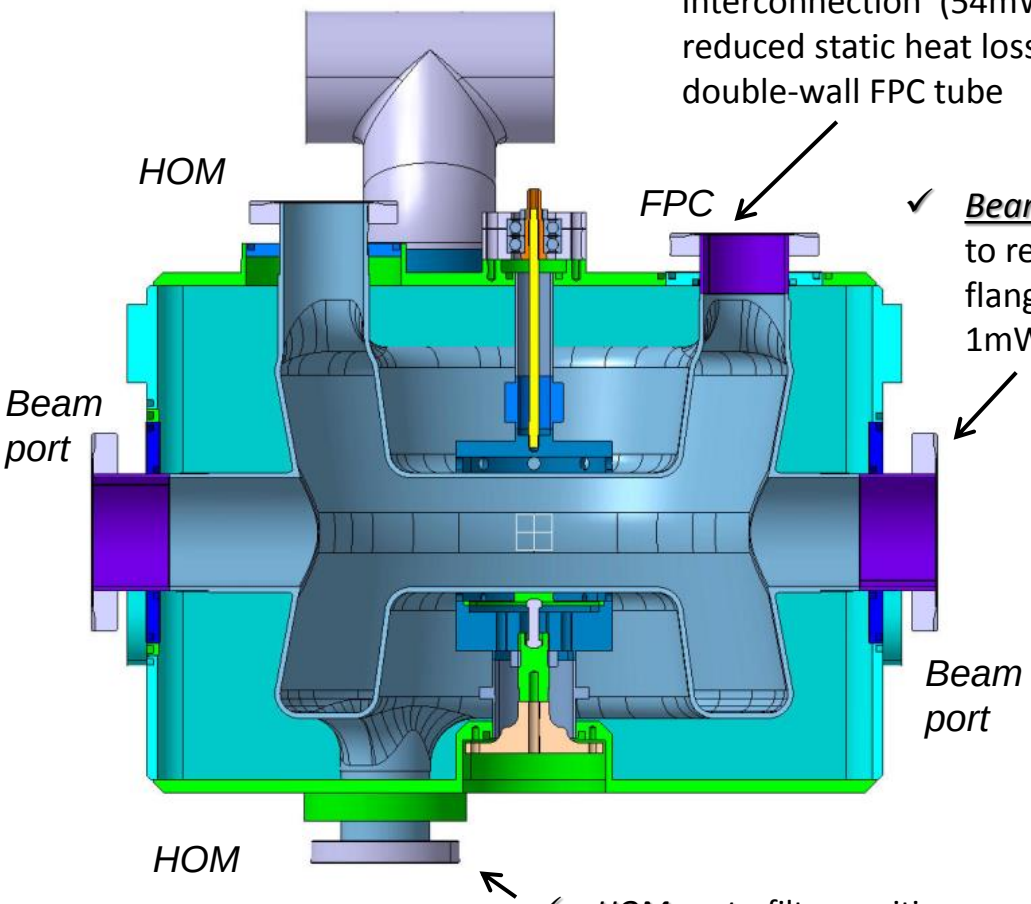

Use **RF seal copper gasket** for:
1) significant reduction of power losses in flanges interconnection and
2) enhanced leak tightness.

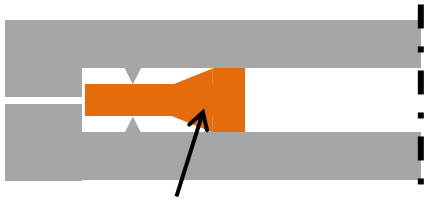

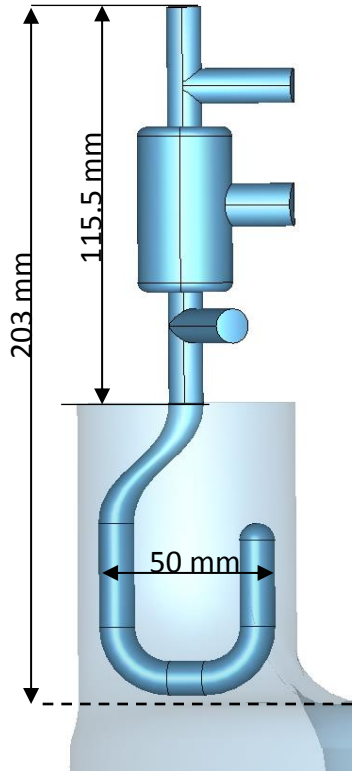

Helium vessel in titanium (BNL-CERN)

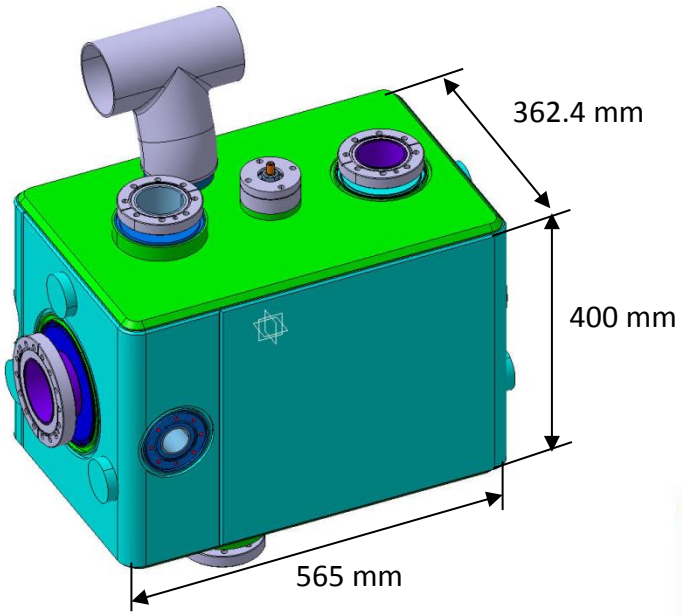

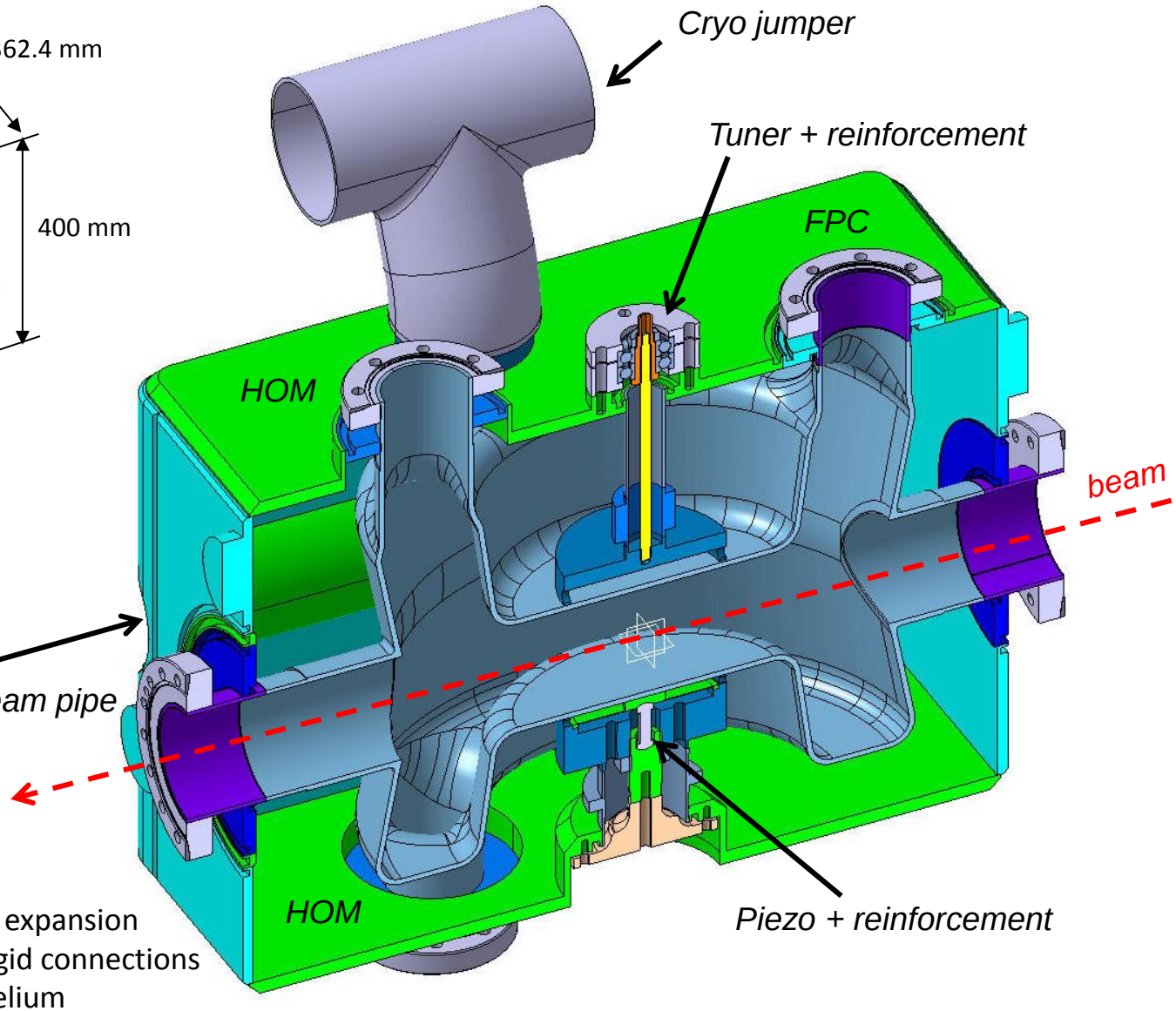

- Titanium shows same thermal expansion coefficient than Niobium → rigid connections
- Compact design, 55 liters of helium

Helium vessel in stainless-steel (BNL-CERN)

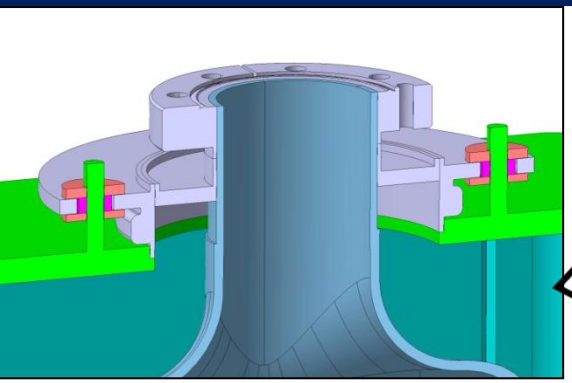

Detail of upper HOM port

Allows longitudinal displacement during cooldown, fixes transversal.

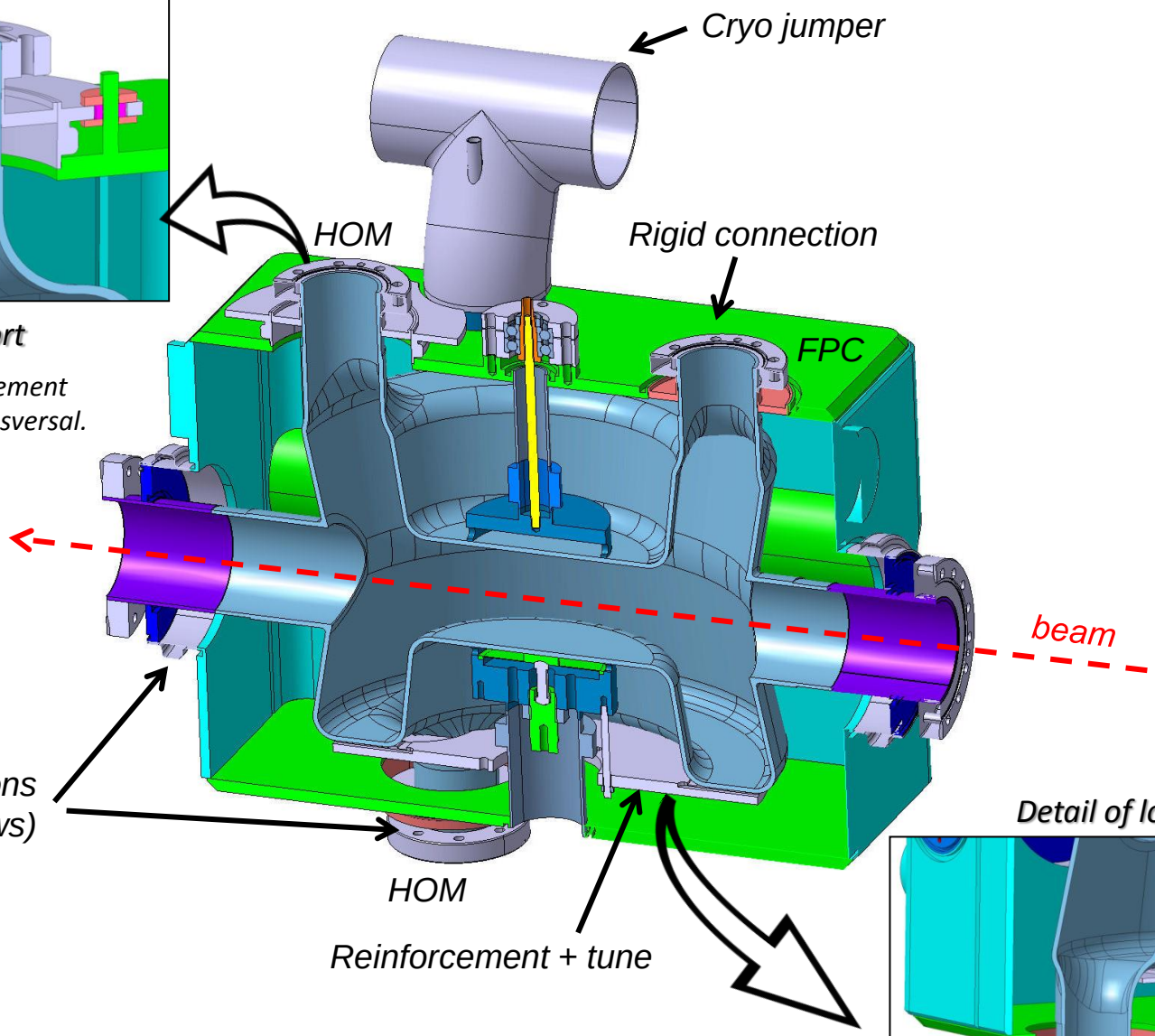

Detail of lower HOM ports

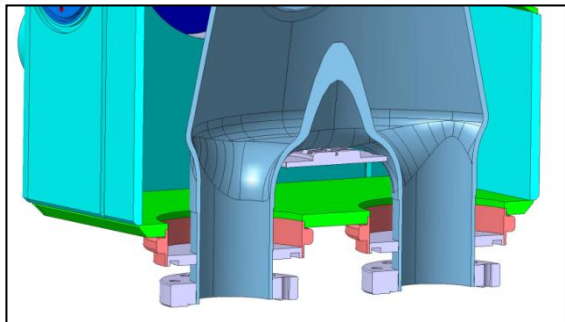

Integration of dressed cavity into cryomodule (CERN)

Input power waveguides

Cryo jumper

Tuning system

FPC

Helium vessel

Cavity

Thermal shielding (80K – nitrogen)

Magnetic shielding

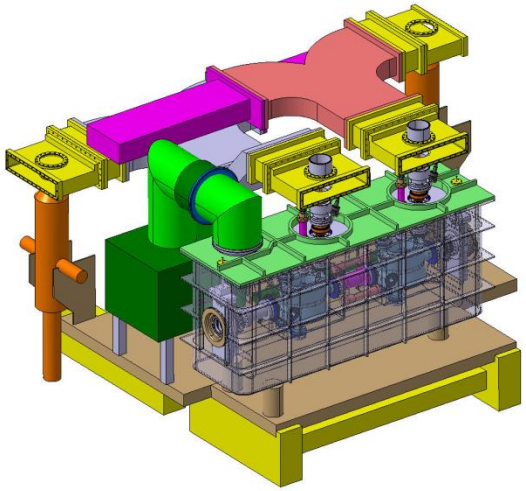

FOR MORE DETAILS FOLLOW THE TALK BY LUIS ALBERTY

Summary & Outlook

- **Achievements / strengths of the model**
  - Compactness, cavity design suited for LHC
  - Improved peak surface magnetic field to 69 mT and relatively high R/Q of 430 Ohm
  - Observed from PoP DQWCC: relatively low difficulty in fabrication and cleaning

- **Further steps**
  - Frequency shift table (He pressure, BCP, temperature change, Lorentz detuning, ...)
  - Frequency sensitivity to machining tolerances
  - Multipolar components (add. bead pull of PoP DQWCC)
  - Multipacting studies
  - Thermo-mechanical stresses
  - Test of HOM filter prototype
  - HOM port cooling system

Thanks for your attention!