Crab Cavity Workshop

9-11 Dec 2013
CERN Geneva

Power Amplifiers & Fundamental Power Coupler

Contents

- FPC
  - Initial design February 2013
  - Arcing in air line
  - New design December 2013
  - Test boxes designs
  - Schedule

Great thanks to:
Antoine Boucherie
Sébastien Calvo
Many MME colleagues

- PA
  - Tetrode amplifier
  - Driver amplifiers
  - Power supplies
  - Circulator & integration

Great thanks to:
Charles Julie

FPC – initial design

- 400 MHz 50 kW CW FPC
- We agreed on a coaxial line OD 62 mm / ID 27 mm
- We designed a coaxial disk window scaled to the recent SPL coupler developed at CERN
  - Titanium flange
  - Al2O3 97.6% ceramic
  - Copper tube

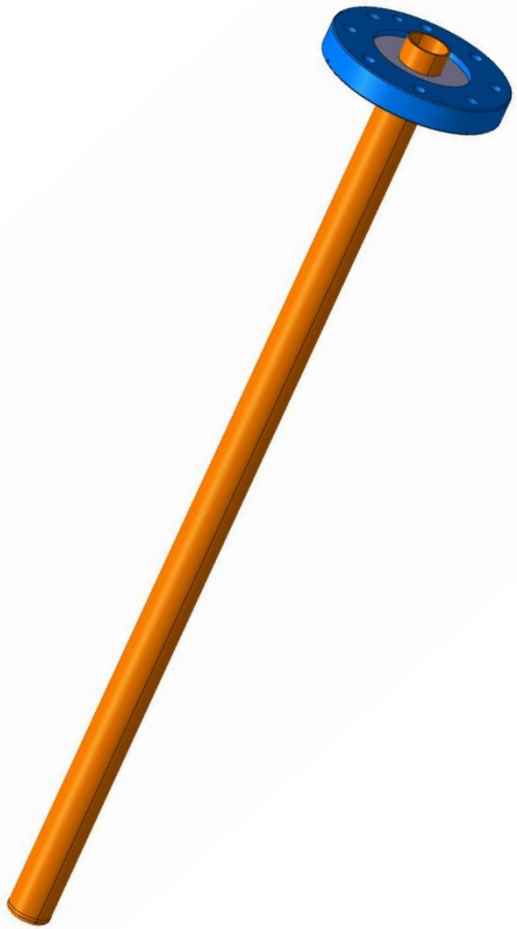

FPC – initial design

- 400 MHz 50 kW CW FPC
- We agreed on a coaxial line OD 62 mm / ID 27 mm
- We designed a coaxial disk window scaled to the recent SPL coupler developed at CERN
  - Titanium flange
  - Al2O3 97.6% ceramic
  - Copper tube

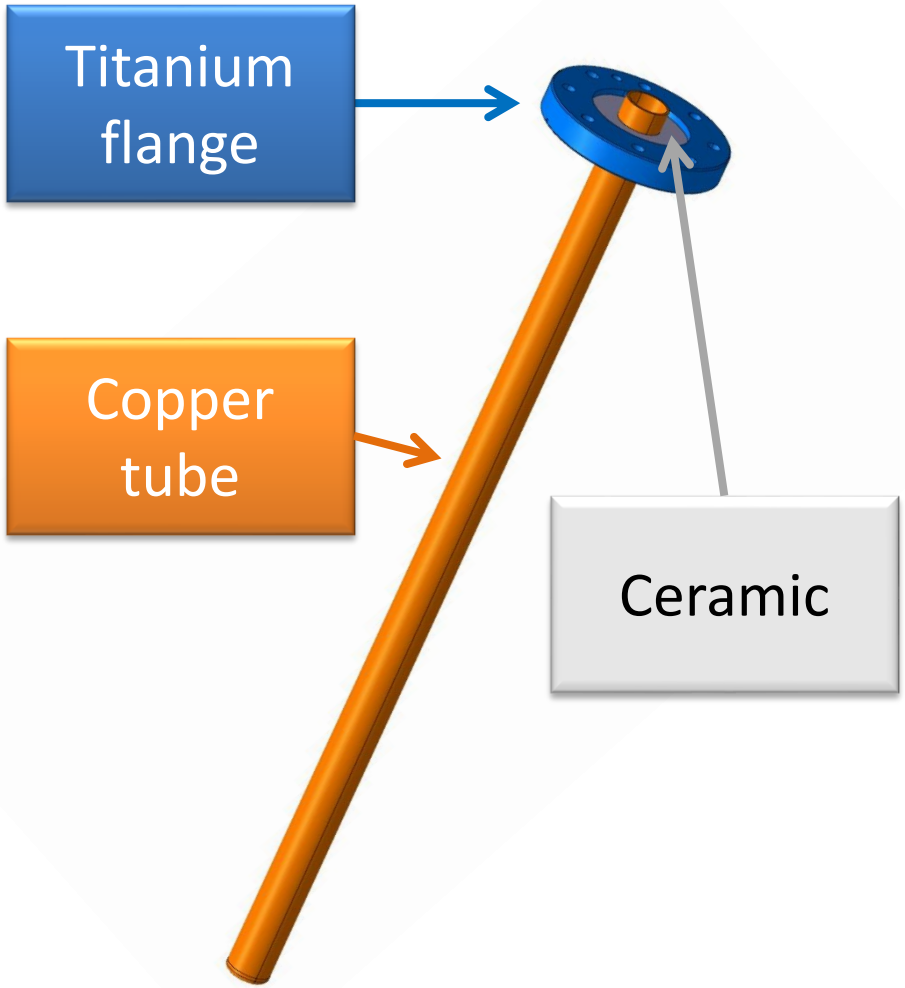

FPC – initial design

- Coupler body
  - Massive copper
  - 316 LN Stainless Steel flanges on both sides
- Monitoring ports
  - 1 port for vacuum gauge
  - 1 port for e- monitoring
  - 1 port for arc detector

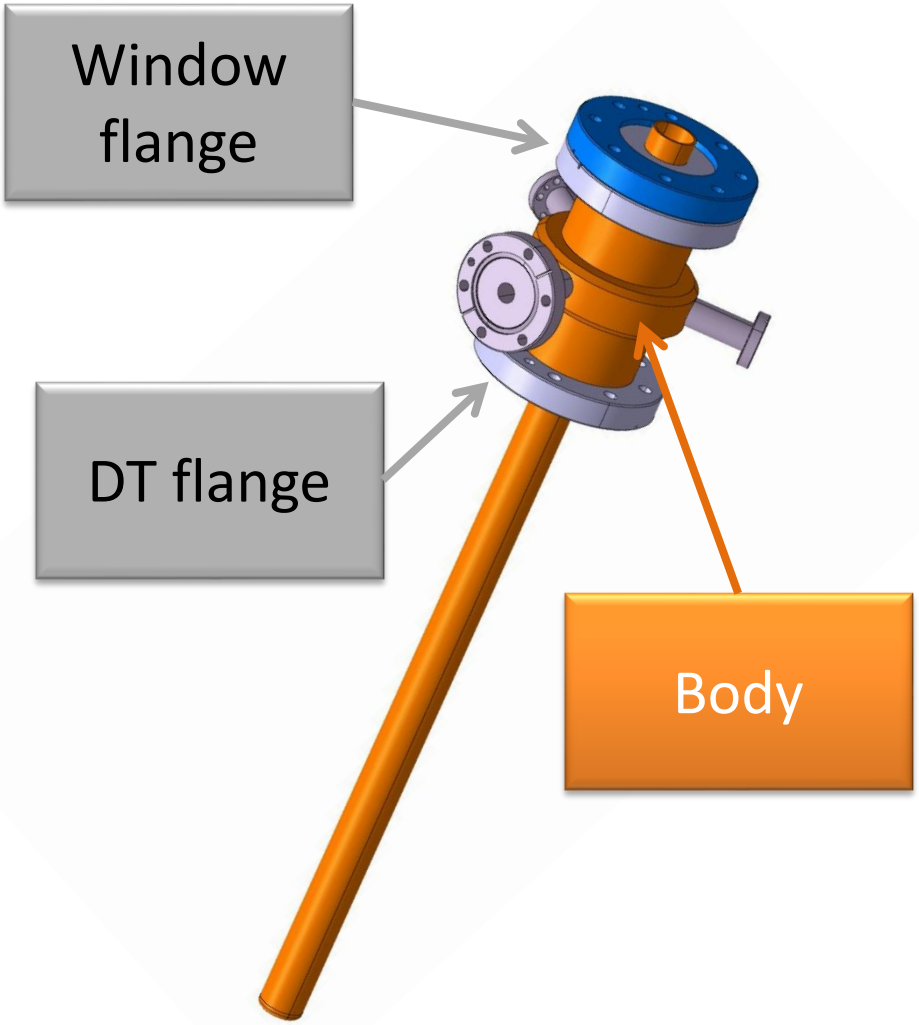

FPC – initial design

- Coupler body
  - Massive copper
  - 316 LN Stainless Steel flanges on both sides
- Monitoring ports
  - 1 port for vacuum gauge
  - 1 port for e- monitoring
  - 1 port for arc detector

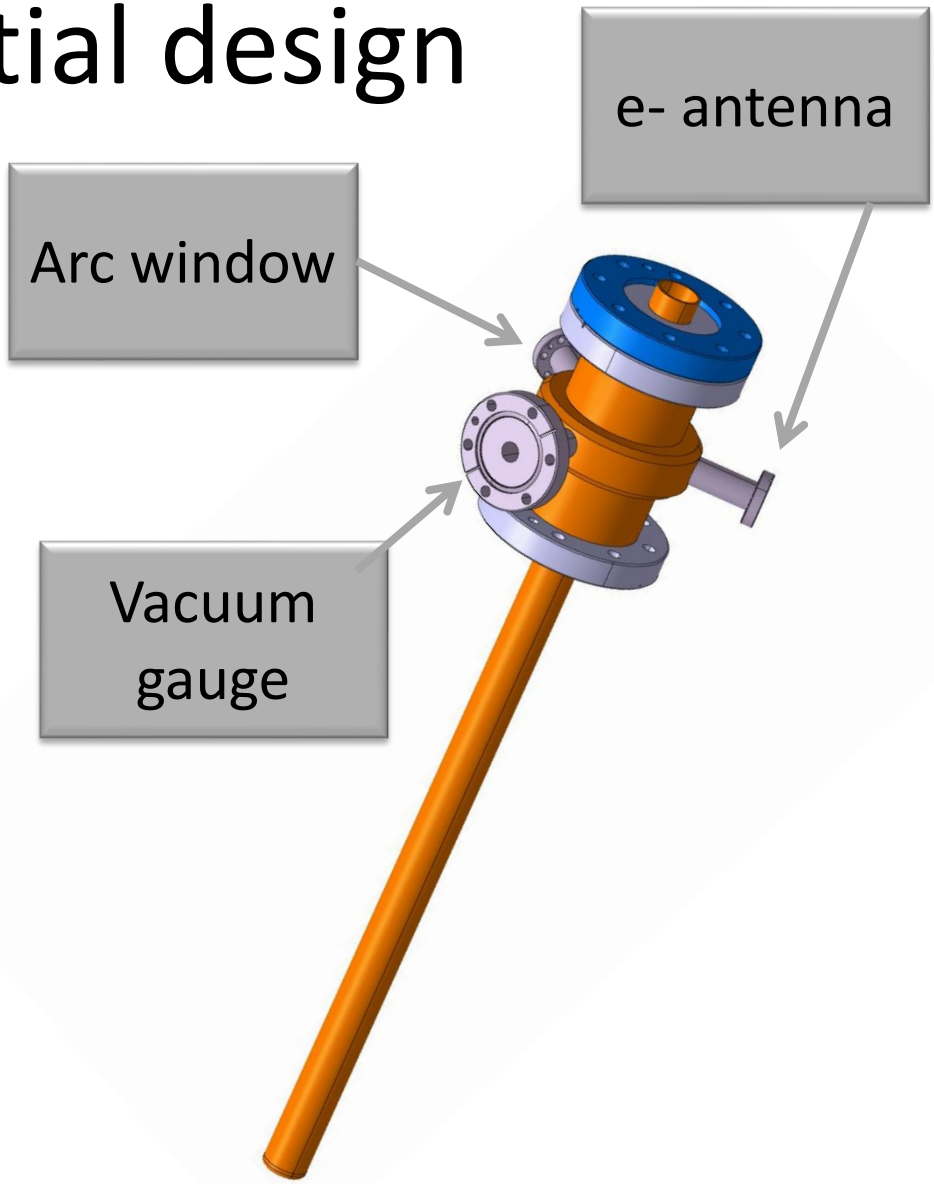

FPC – initial design

- From this window we have a coaxial to WG WR2300½H transition without doorknob

- There is also a DC capacitor included in the design for DC polarization

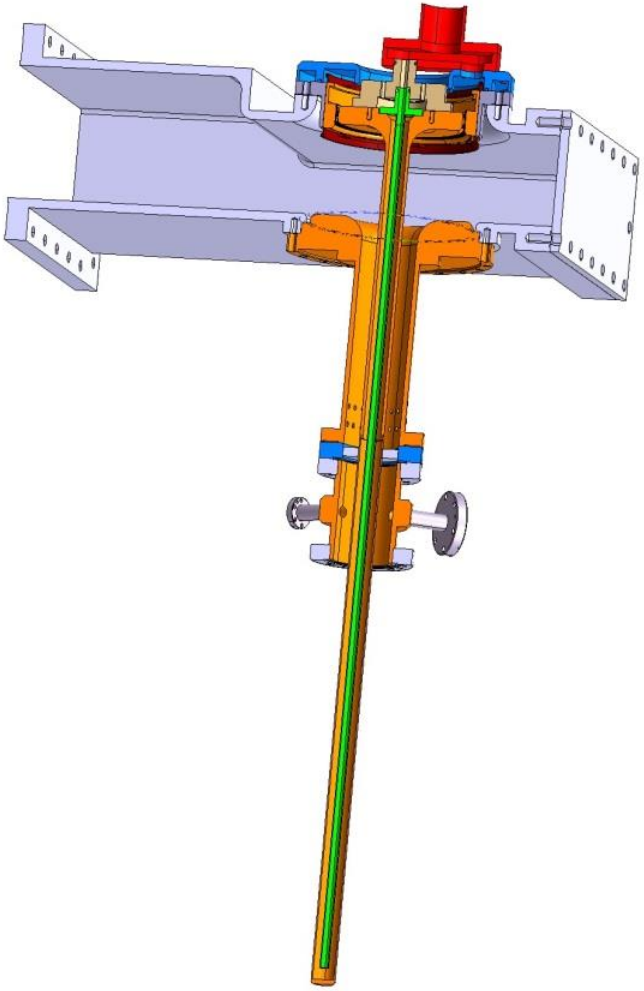

SPL experience – arcing in air side

- This SPL coaxial disk is very similar
- 100 / 43.5 mm coaxial line
- Operating 704 MHz 2 ms – 50 Hz up to 1 MW SW all phases
- At 650 kW SW with a particular phase, we started to arc in the air side around the ceramic, along the coaxial line and in the waveguide
- We were limited to 500 kW SW

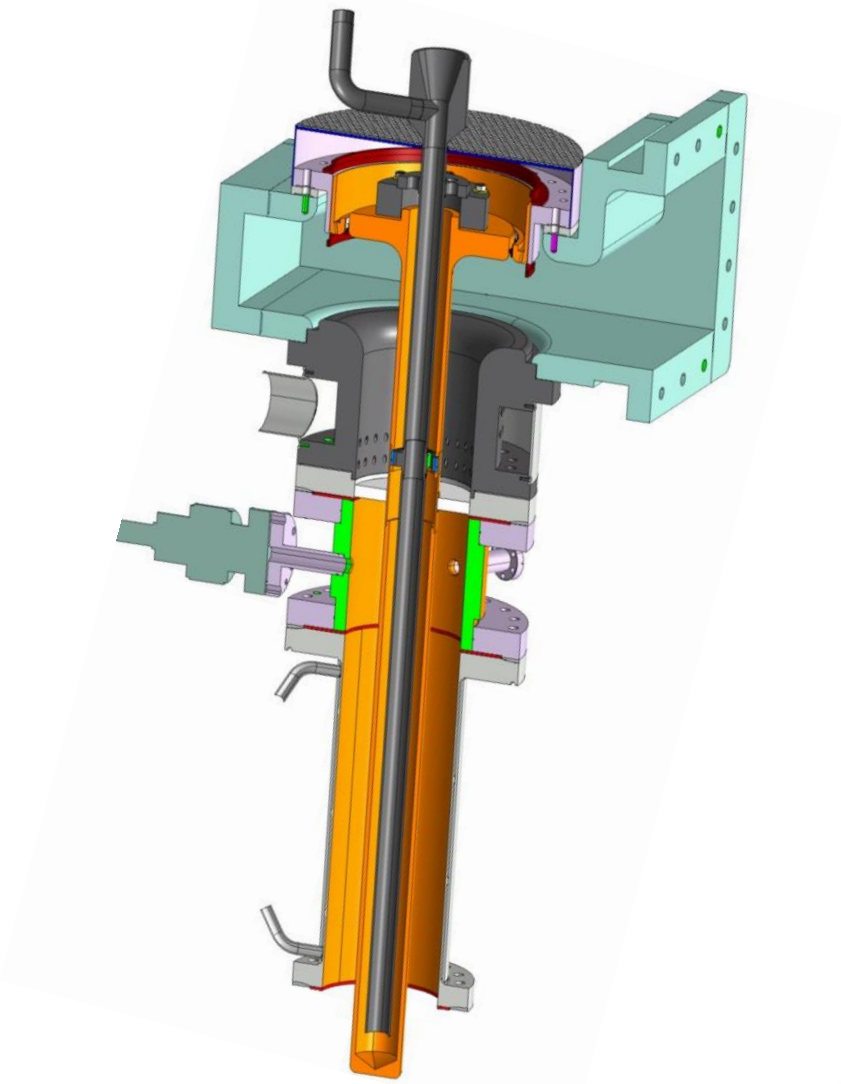

SPL experience – arcing in air side

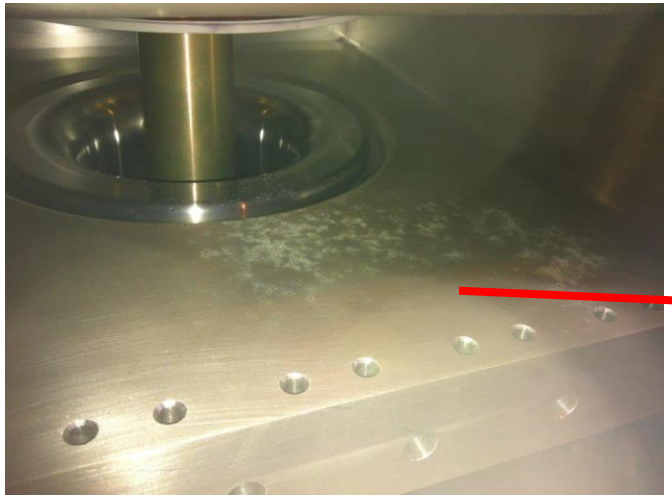

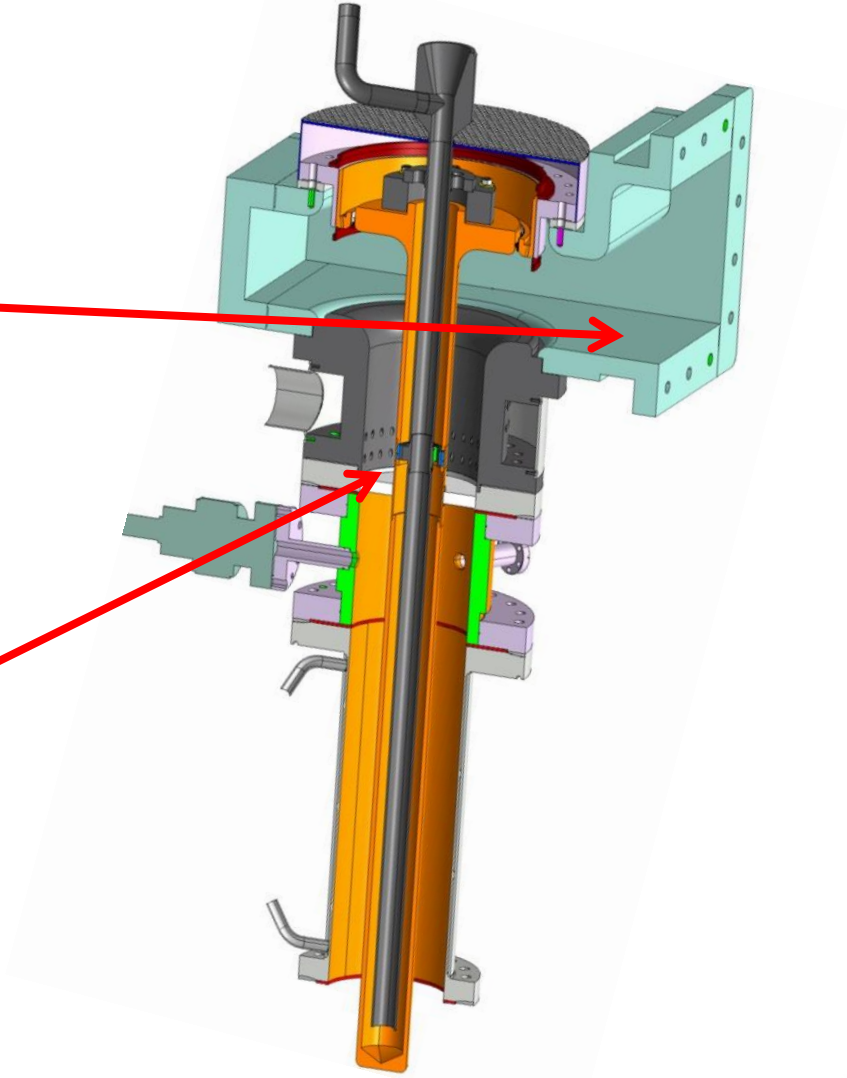

Coaxial straight line maximum rating

SPINNER || BROADCAST

OD 180 mm

100 kW

50 kW

OD 115 mm

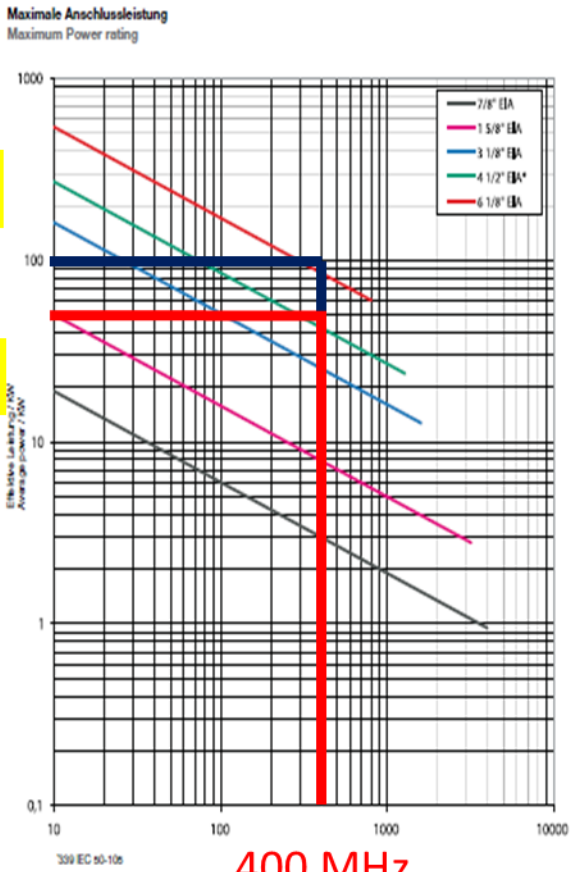

400 MHz

Power Rating

Data based on: Ambient T=40°C, Inner T=120°C

Exir Broadcasting

OD 200 mm

100 kW

50 kW

OD 120 mm

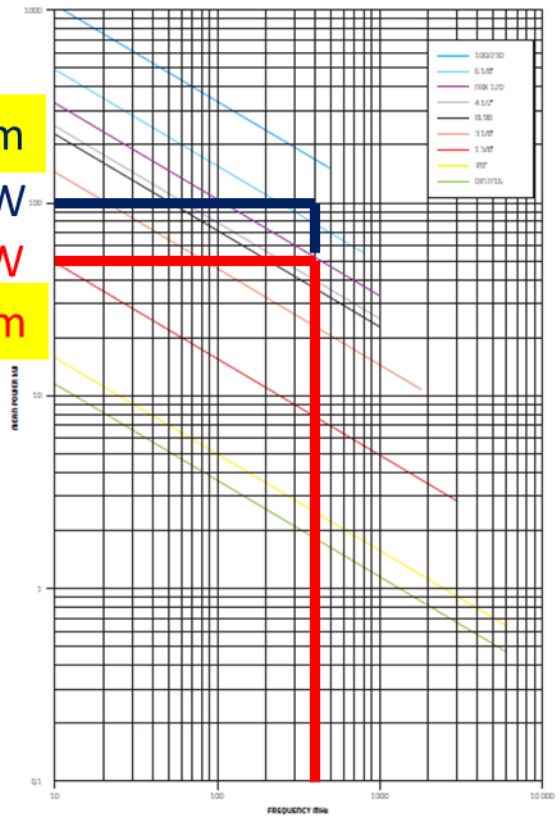

400 MHz

New crab FPC design

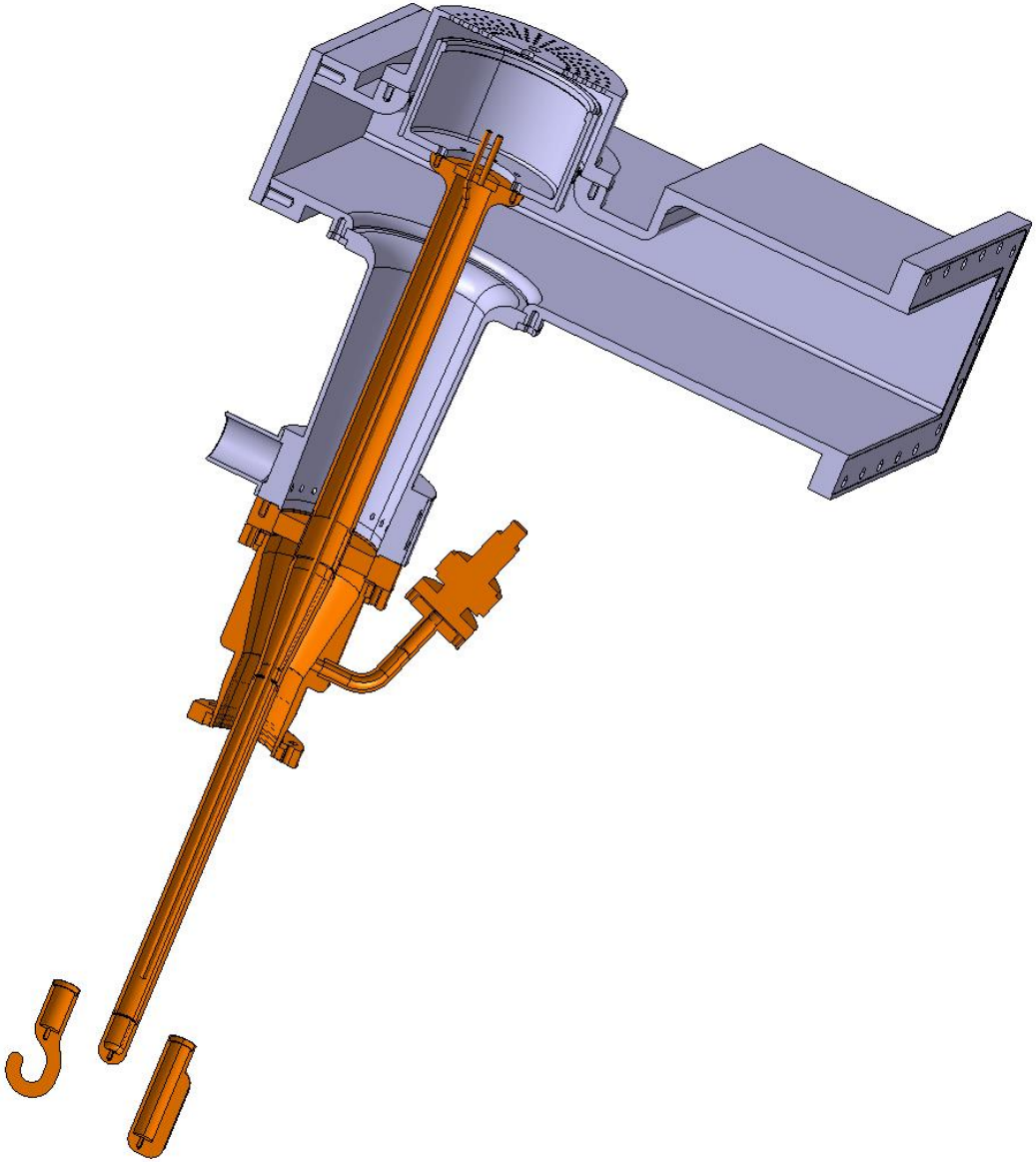

We kept the agreed
OD 62 mm / ID 27 mm
coaxial line
on the cavity side

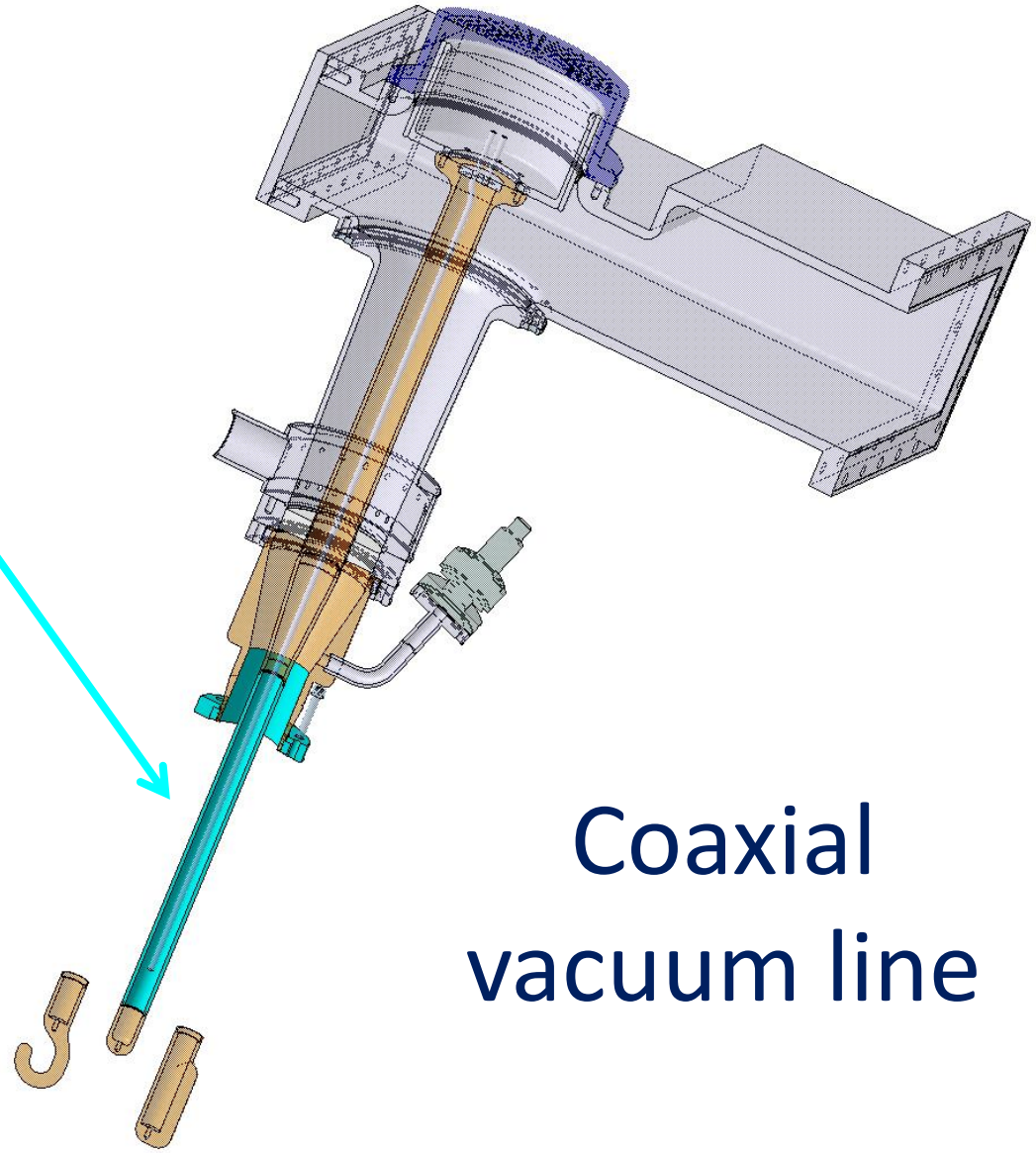

Coaxial
vacuum line

We designed a conical vacuum line to increase the diameter of the ceramic in order to avoid arcing on the air side

The goal is to have the air side size as large as possible to avoid arcing

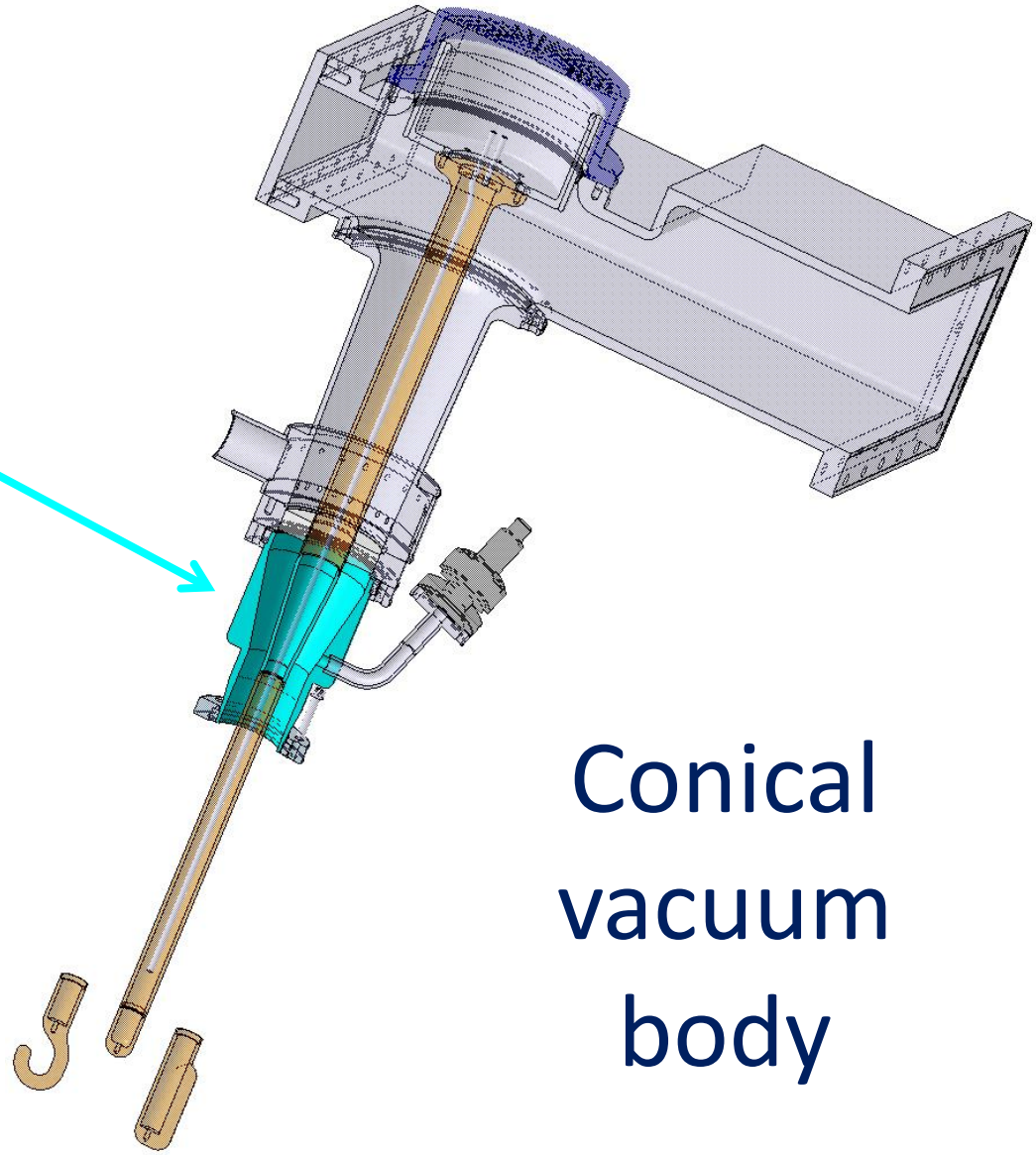

Conical vacuum body

OD is increased to 100 mm to reduce the risk of arcing

We have chosen a very thick ceramic of 20 mm to make this coupler as robust as possible

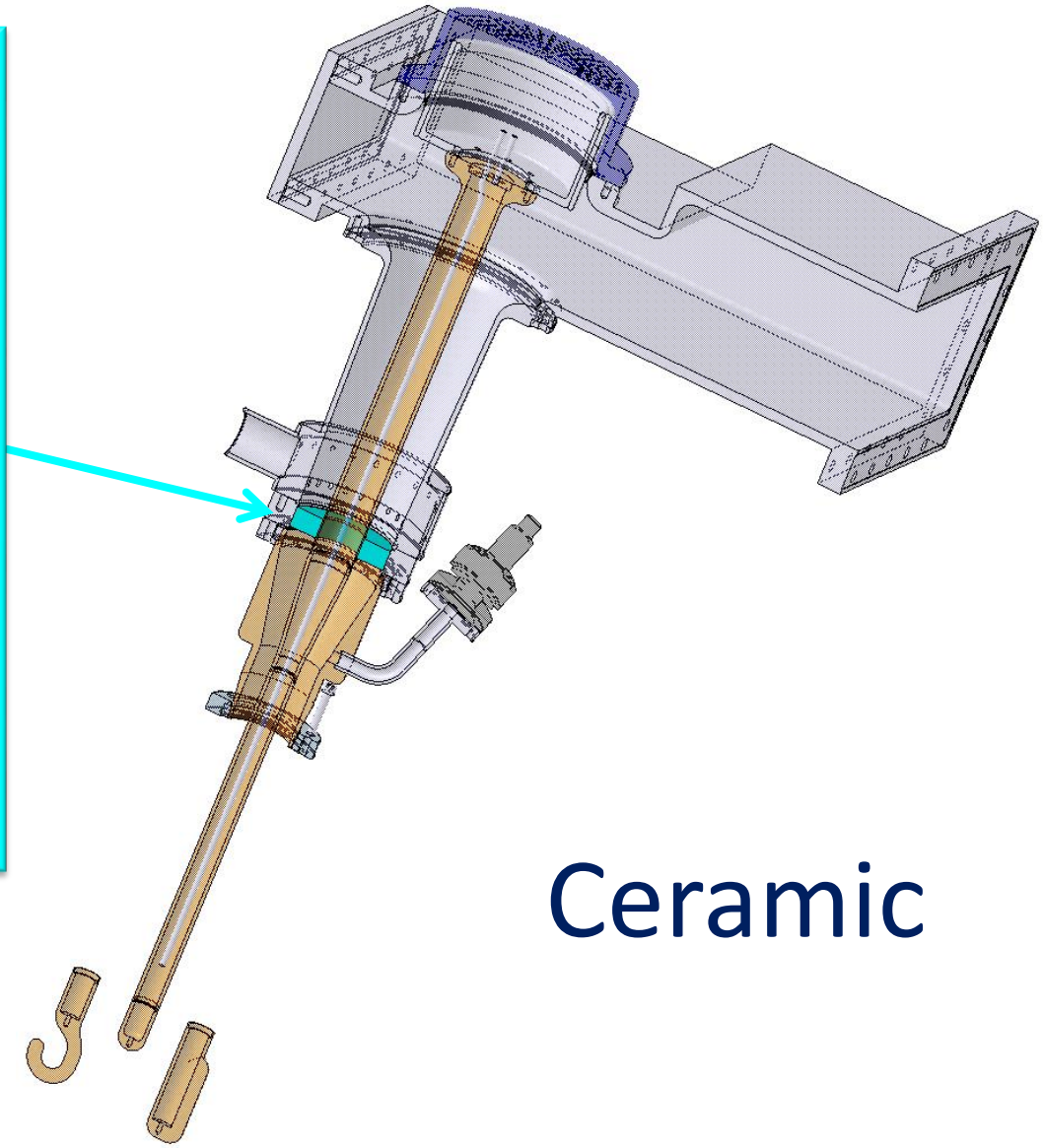

The extension from the ceramic to the waveguide is pseudo-conical in order to increase arcing robustness

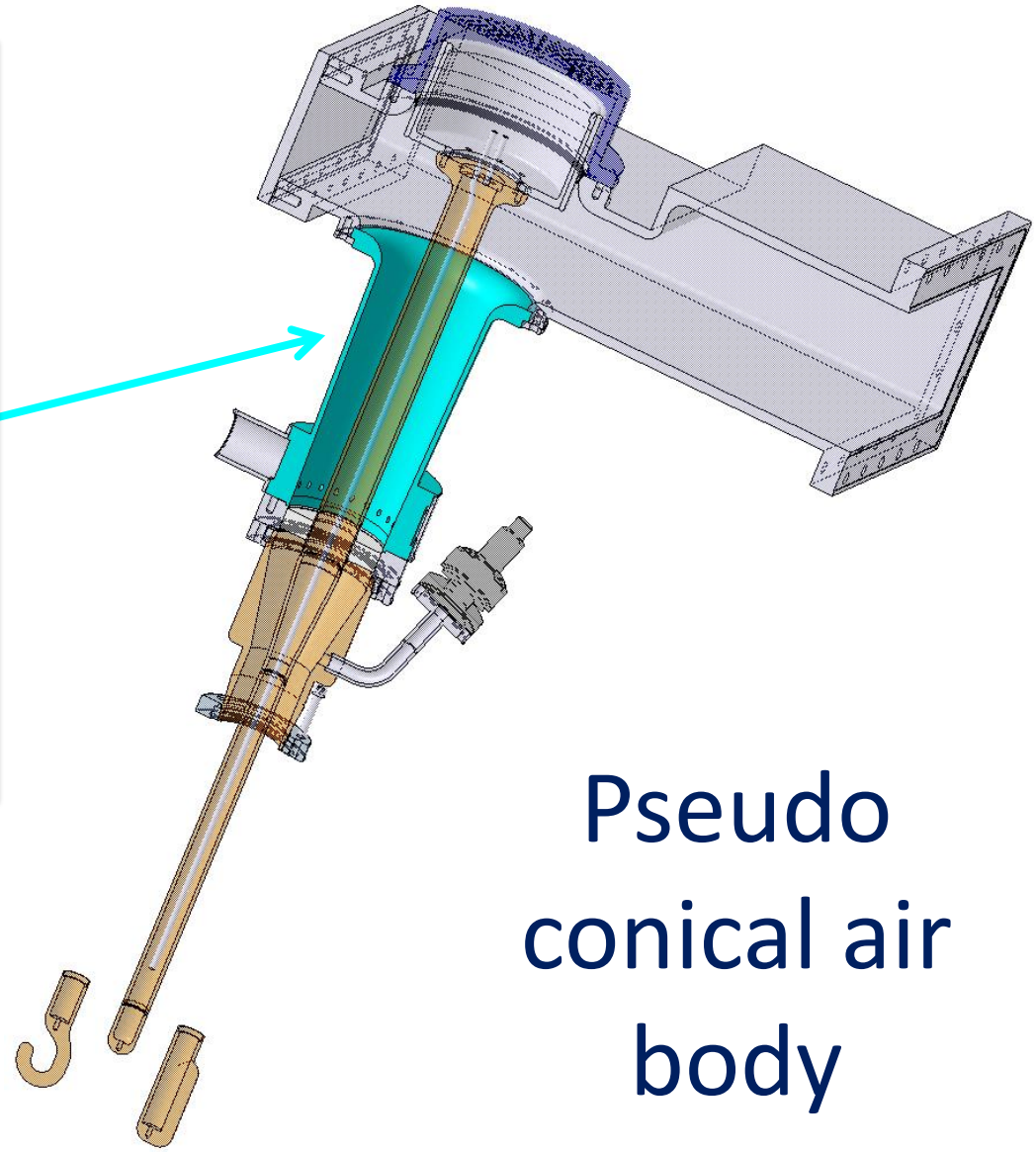

Pseudo conical air body

This air extension is cooled with forced air

This ensures a correct cool down to compensate losses of the thick ceramic

This also reduces the arc development by quickly replacing any ionising air (tips coming from X-ray tube specialist)

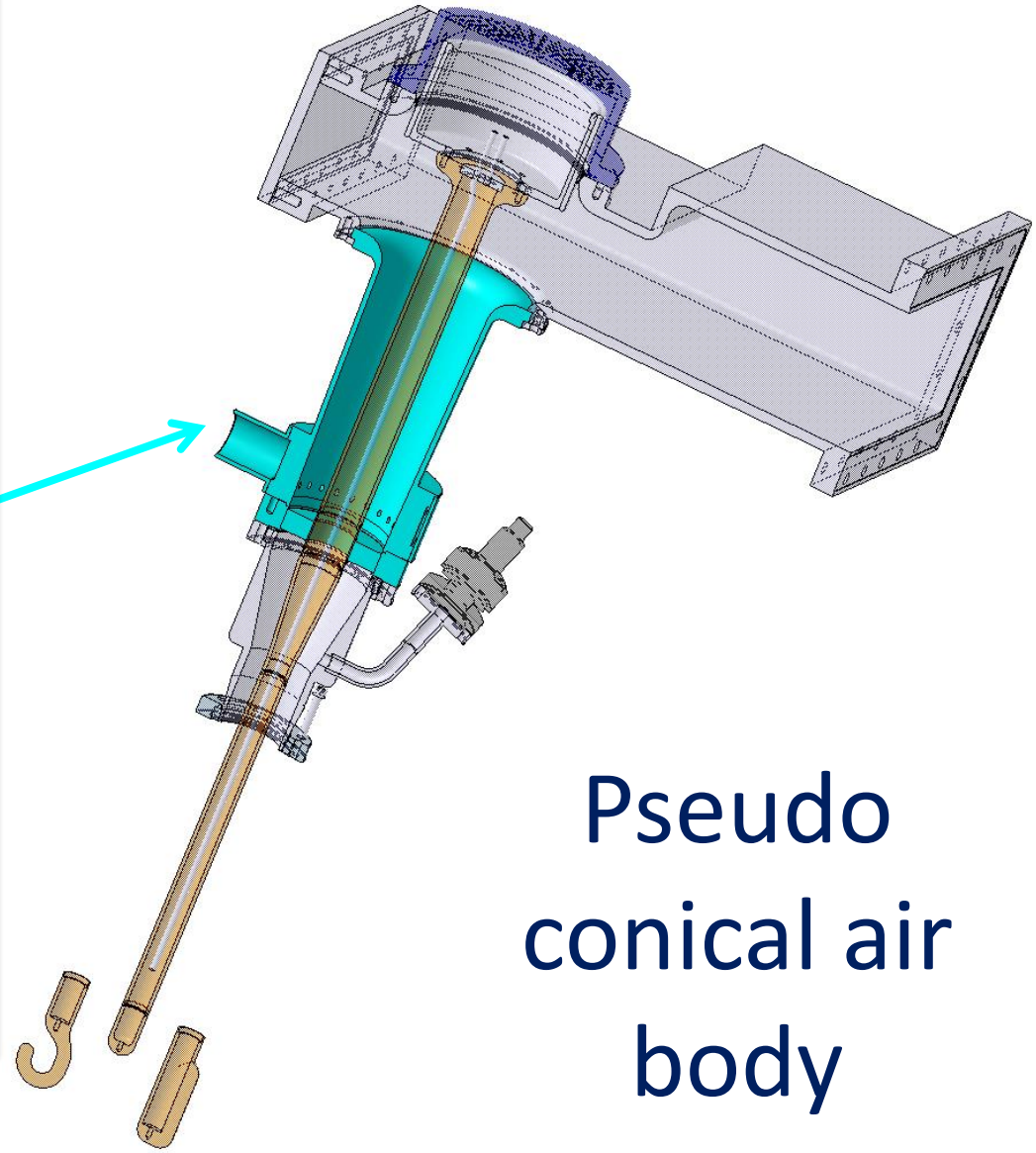

Pseudo conical air body

To ensure a ‘stable’ coupling element position the antenna is water cooled

Against cern’s rule:
no soldering in between water and vacuum

No other way to do it

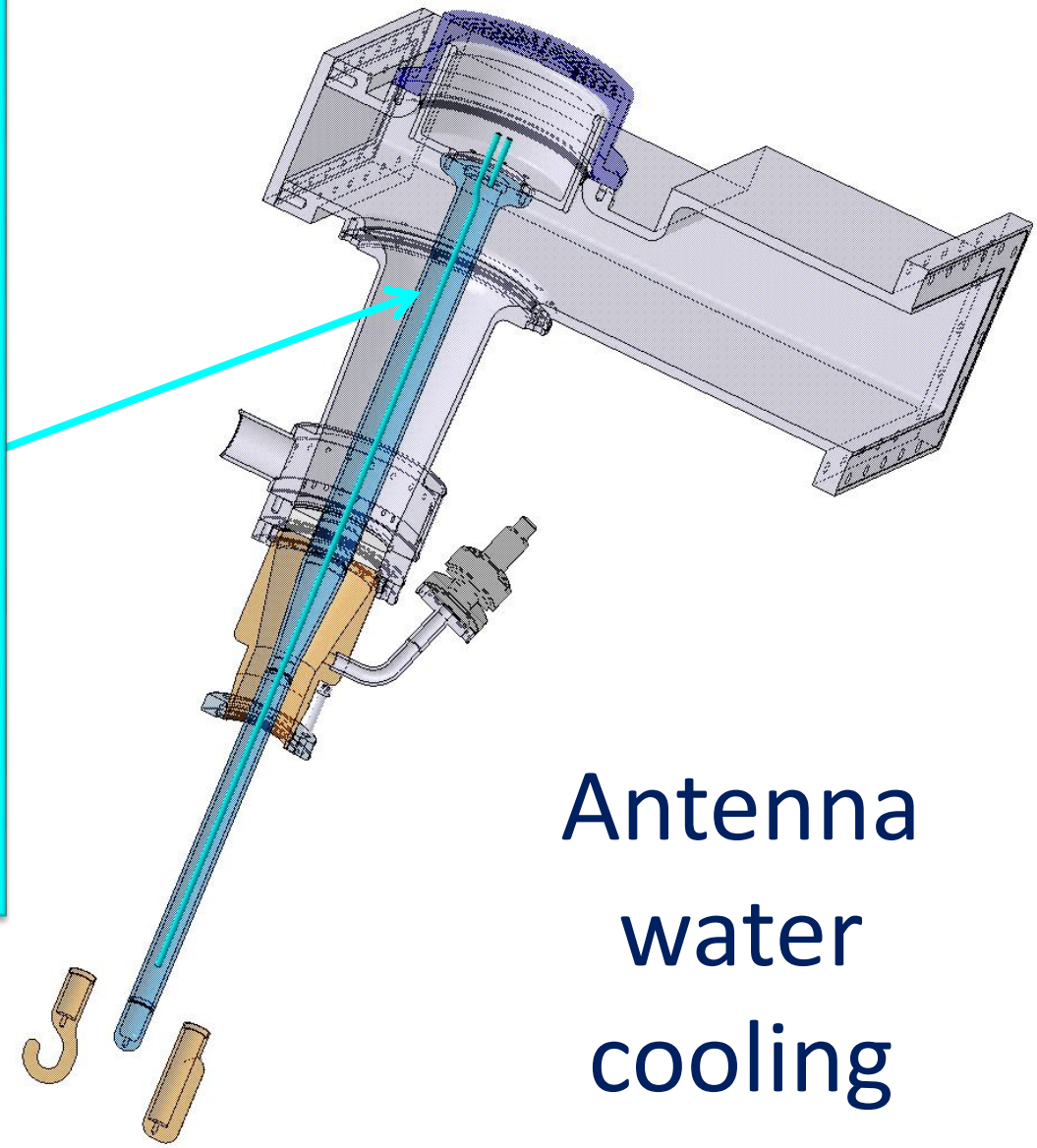

Antenna water cooling

To avoid any water into the RF path the antenna is EBW

This implies huge integration constraints

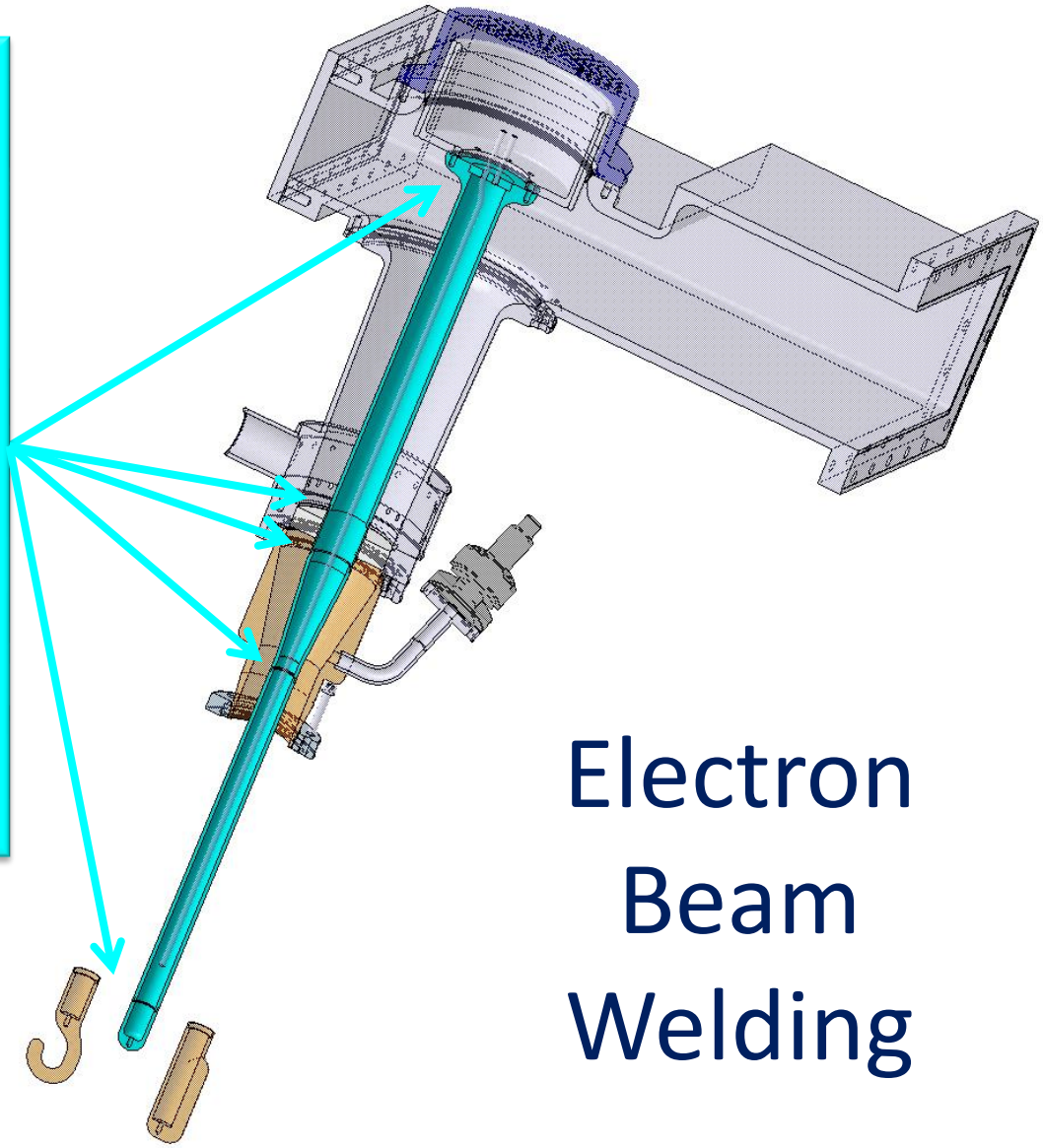

Electron Beam Welding

In order to monitor the outgassing around the ceramic and to protect the coupler in operation and while RF processing a vacuum gauge is mandatory

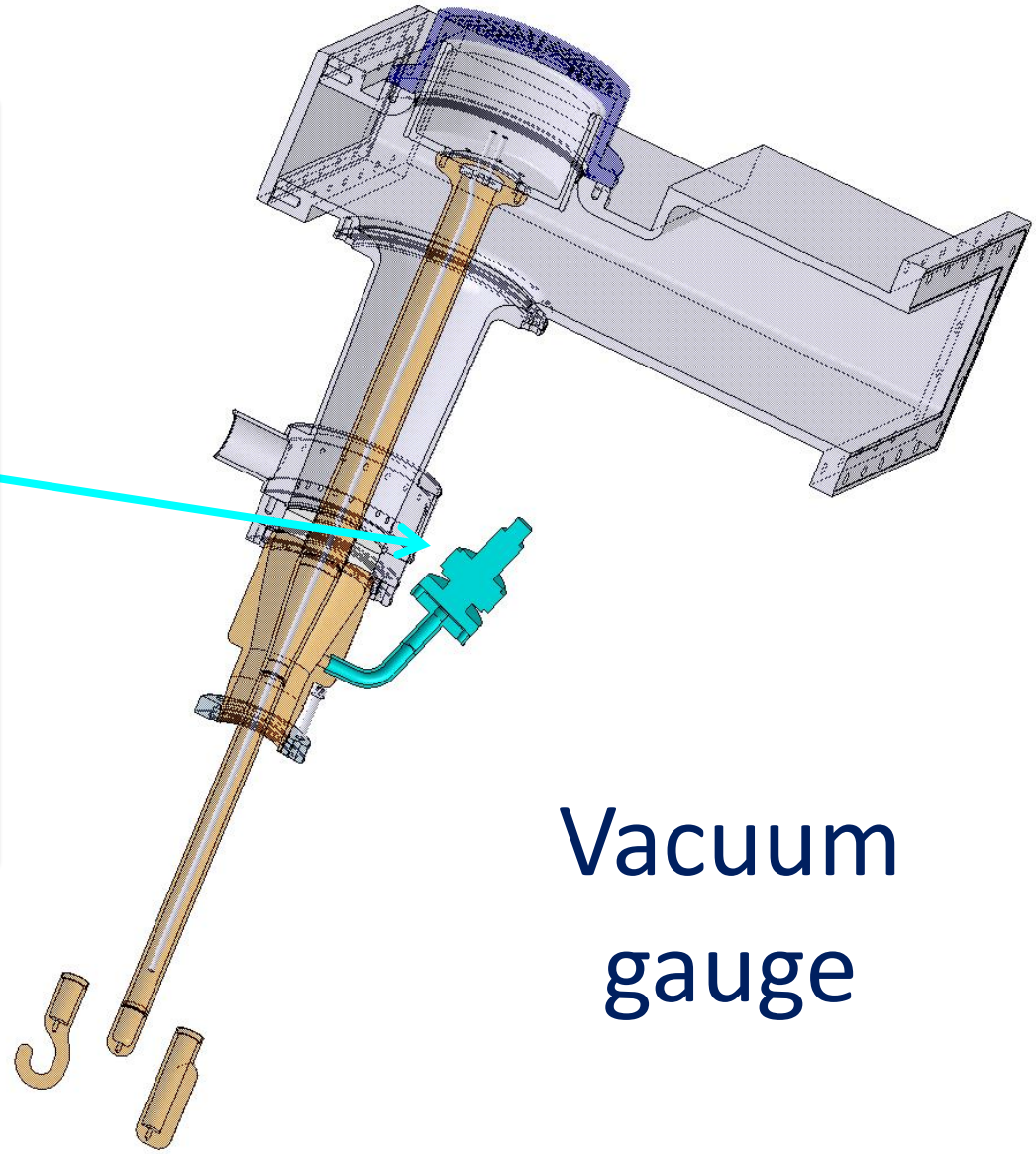

Vacuum gauge

It has been oriented to reduce to its minimum its footprint

The size of the pipe is a compromise between vacuum reading speed & RF shielding

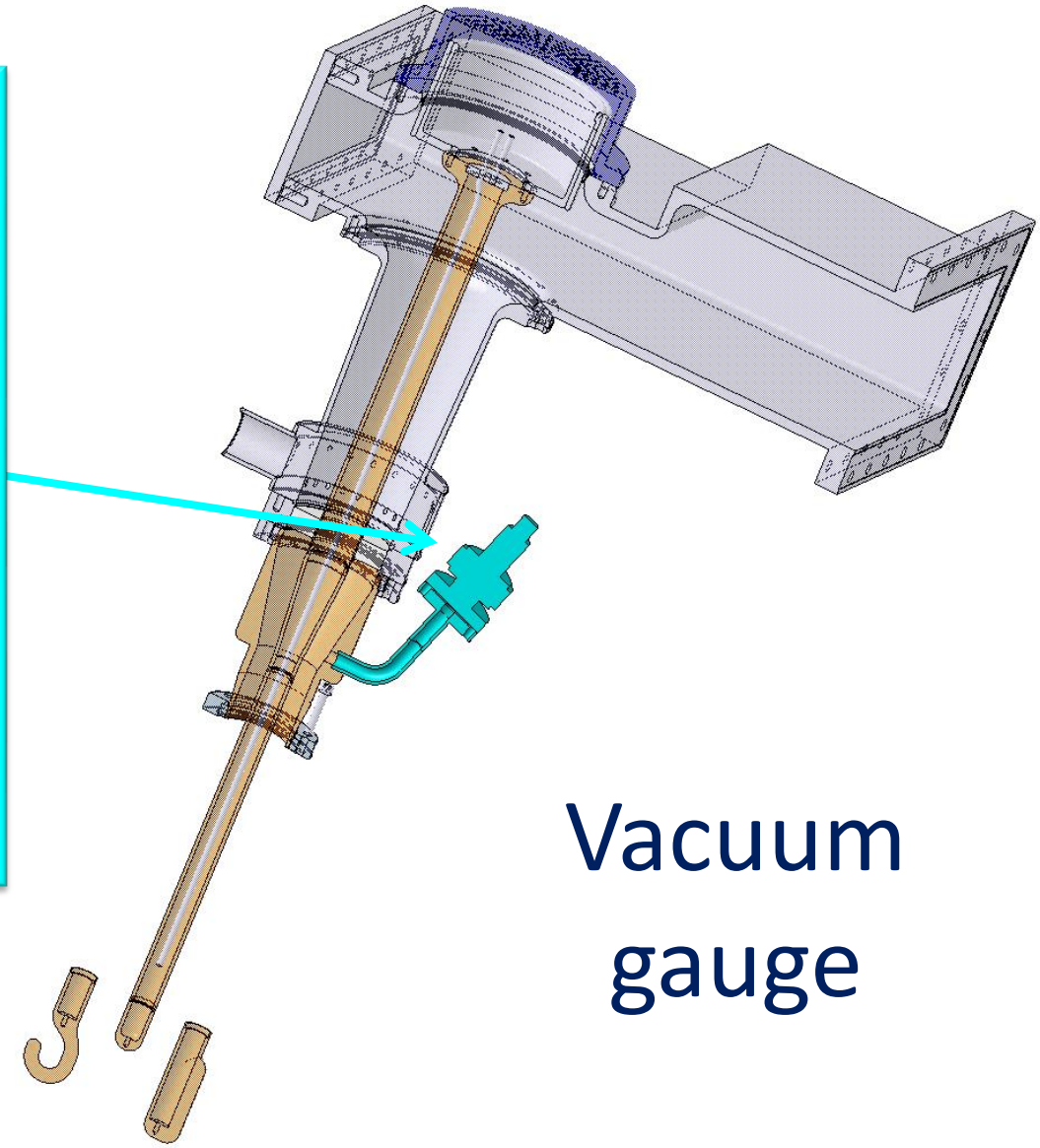

Vacuum gauge

We removed the arc detector window and the e- antenna to simplify integration

Arc protection will be from the top of the waveguide looking into the direction of the ceramic

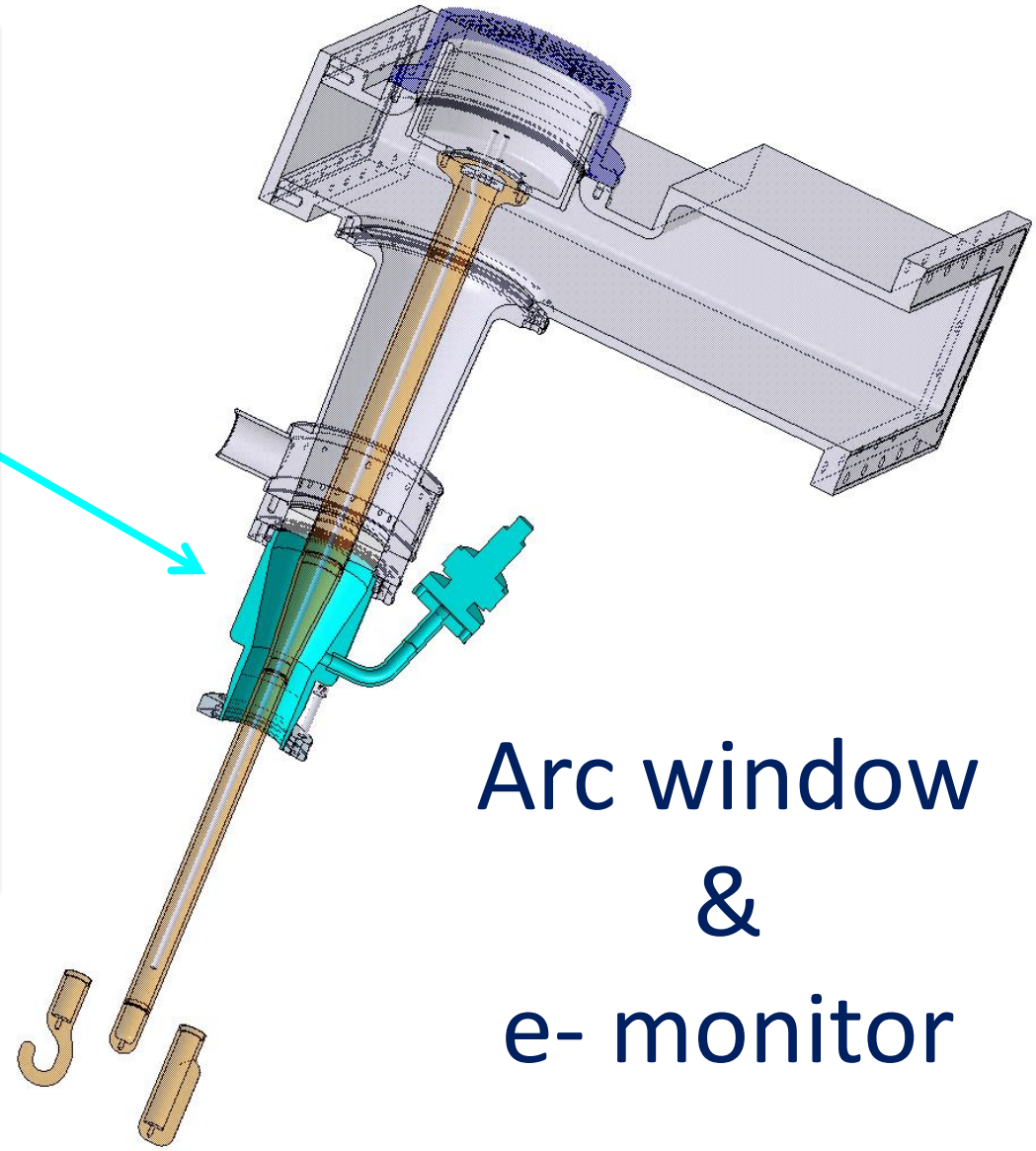

Arc window & e- monitor

The coaxial to WR2300½H waveguide transition is a plug and play without a doorknob and with an integrated step waveguide

It will be mono-bloc from 3D print to avoid any arcing

Doorknob free transition

The DC capacitor is included with finger contact all around to reduce to its minimum the constraint given to the ceramic

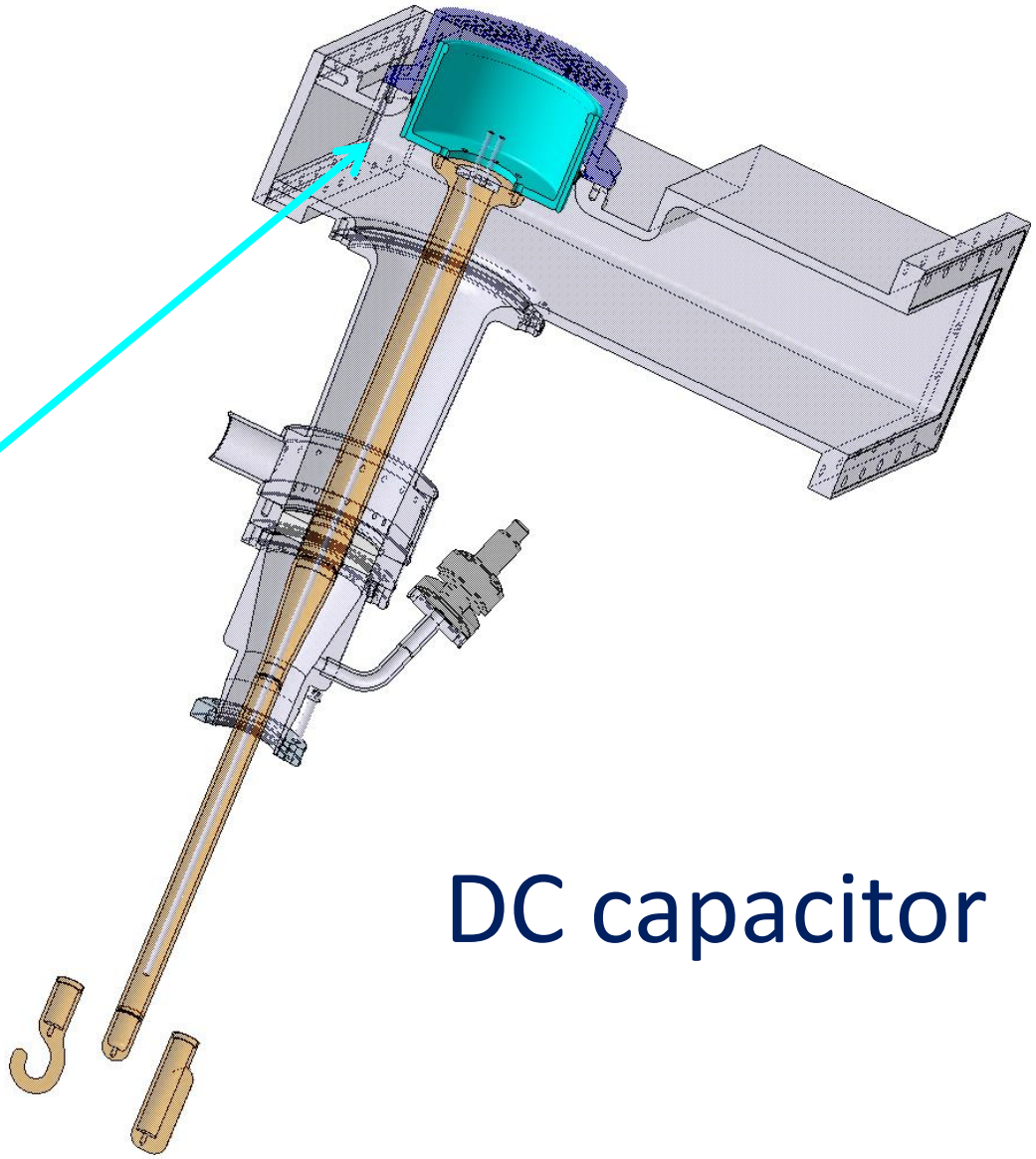

DC capacitor

Three designs
fully compatible
with the only difference:
coupling element

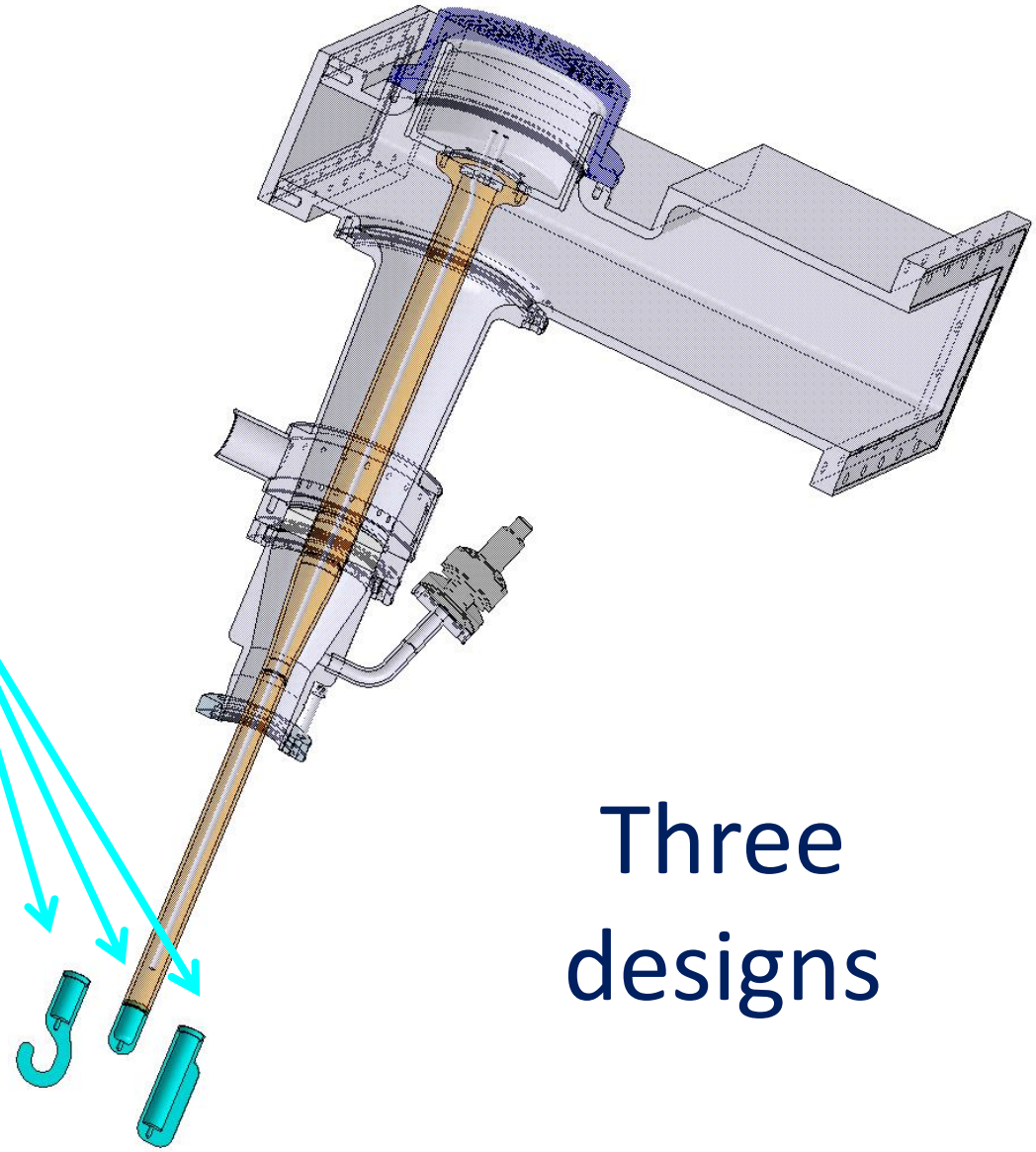

Three designs

Four air & waveguide lines will be built
Two for the machine
Two for the test bench

Eight window lines will be built in order to provide six couplers

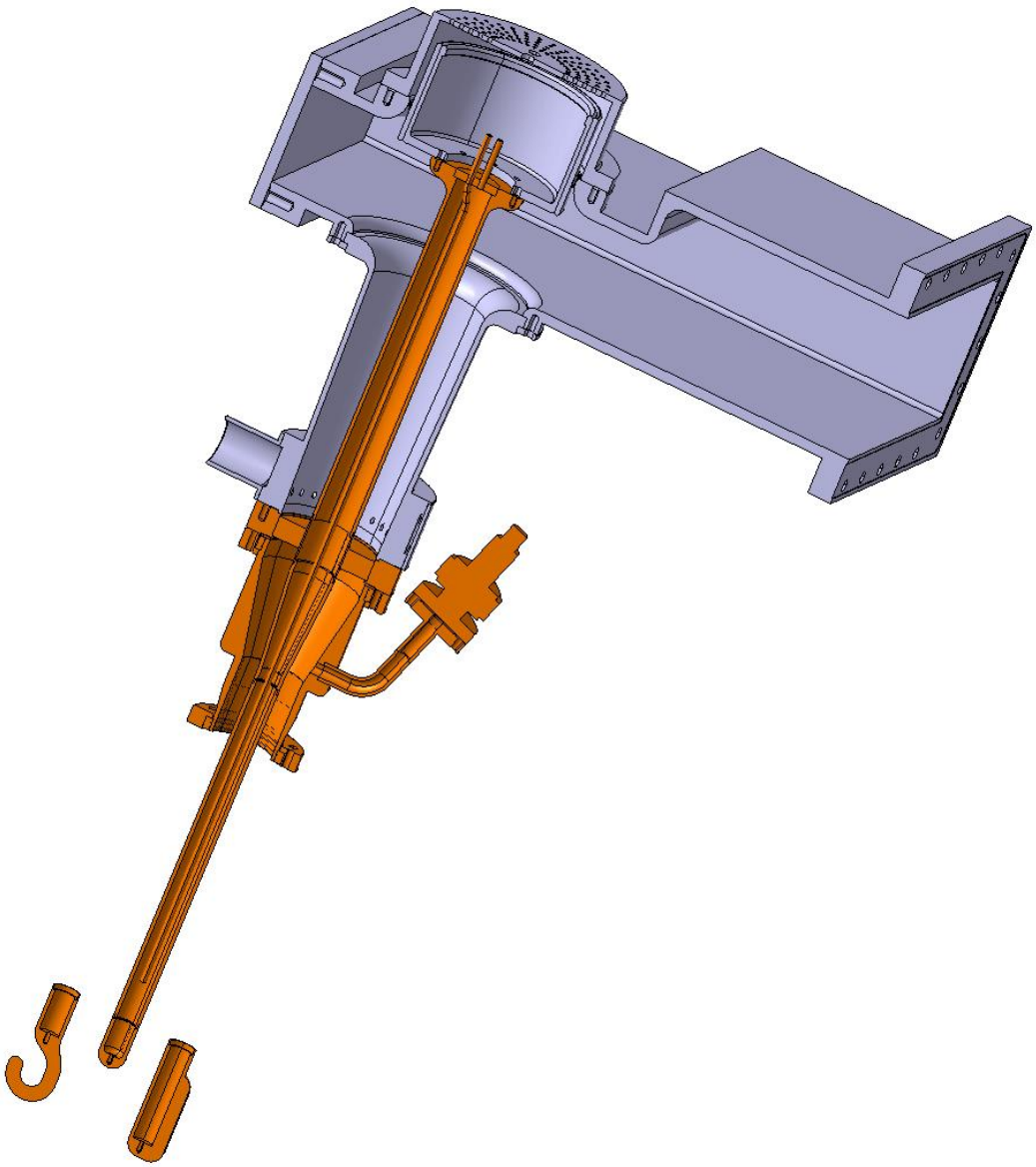

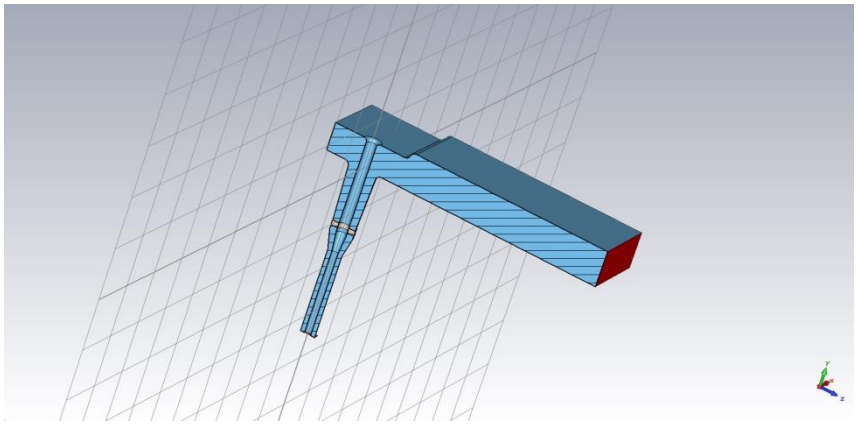

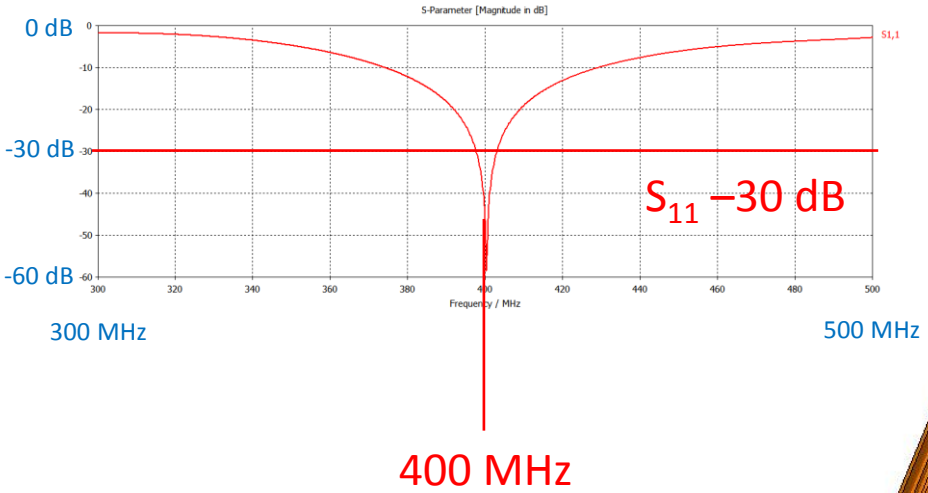
S-Parameter [Magnitude in dB]
S1,1
0 dB
-30 dB
-60 dB
0
-10
-20
-30
-40
-50
-60
300
320
340
360
380
400
420
440
460
480
500
Frequency / MHz
S_{11} –30 dB
300 MHz
500 MHz
400 MHz

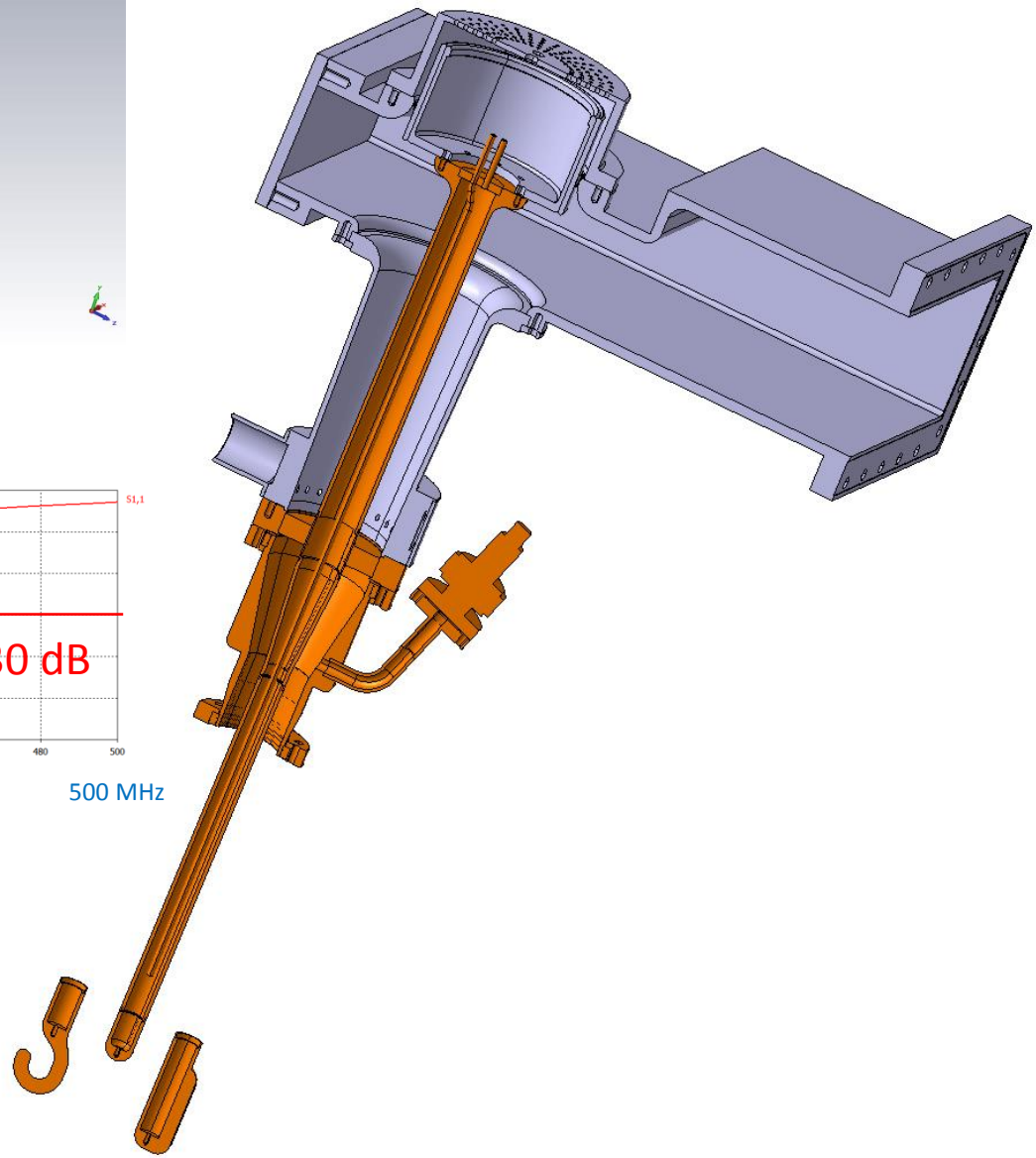

Test boxes

- Three test boxes will be built allowing the preparation of pair of couplers
- They will be two plates and one special shim, with two helicoflex seals
- They will be customized regarding the coupling element
- We will not copper plate them, easier and quicker
- They will be water cooled

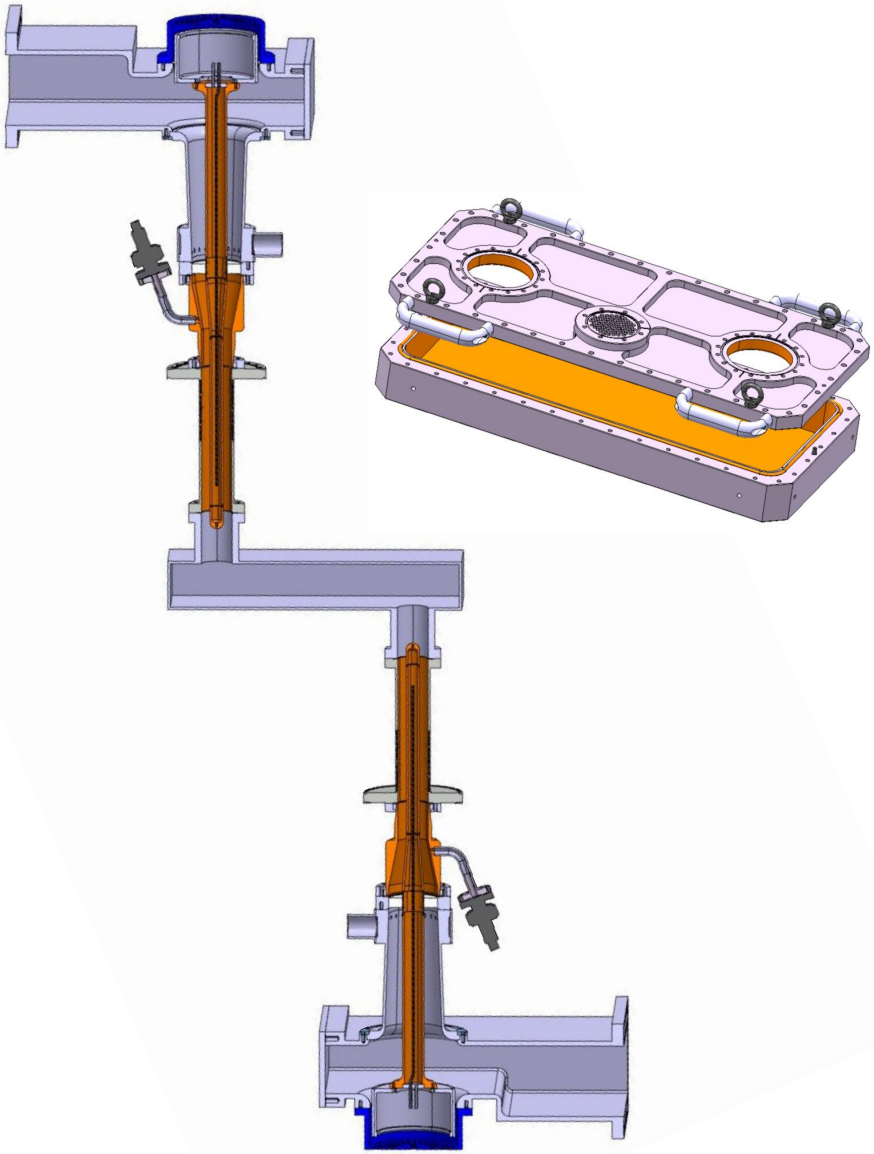

Integration

- As already asked in August, the DT length is a mandatory dimension needed to calculate
  - Antenna length
  - Test boxes
  - The space for integration in LSS4
- Key parameter is the distance between beam axis and the water inlet on the top of the waveguide
- Cryomodule design must take it into account

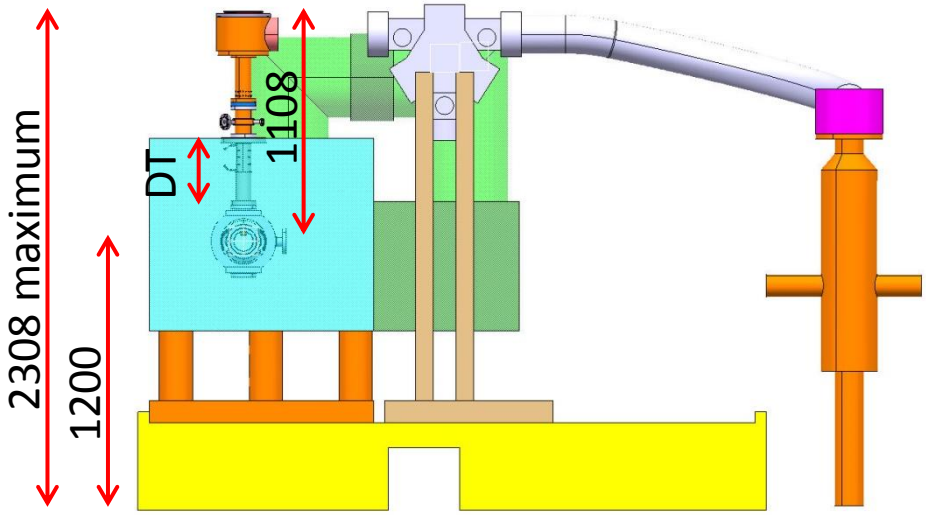

Courtesy of
Thierry Renaglia
Giuseppe Foffano
Ofelia Capatina

Integration

- As already asked in August, the DT length is a mandatory dimension needed to calculate
  - Antenna length
  - Test boxes
  - The space for integration in LSS4
- Key parameter is the distance between beam axis and the water inlet on the top of the waveguide
- Cryomodule design must take it into account

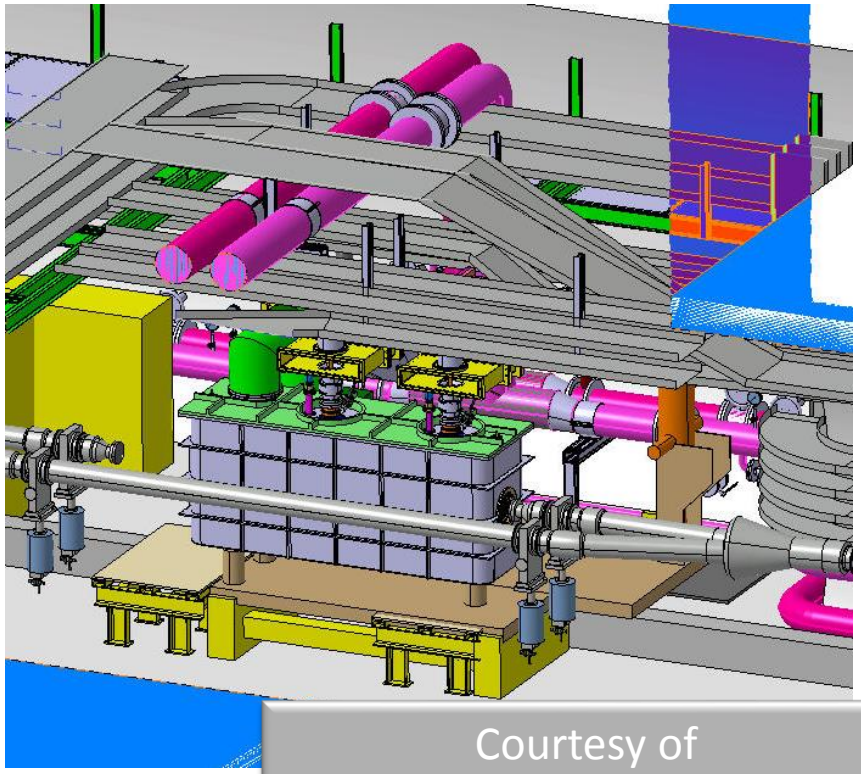

Courtesy of
Thierry Renaglia
Giuseppe Foffano
Ofelia Capatina

Schedule December 2012 (Fermilab)

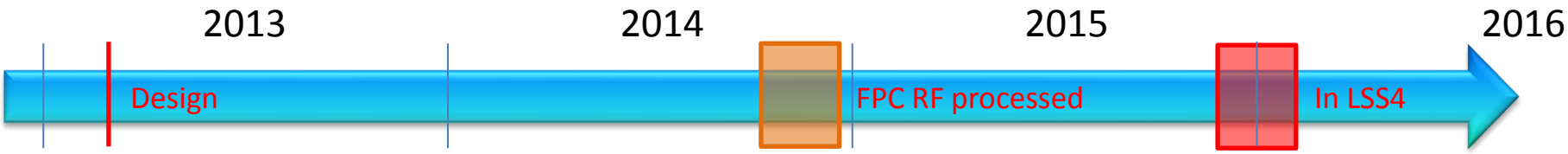

- Cavities to be installed in SPS in December 2015
- Cryostat fully tested Q3 2015
- Cryostat fully dressed Q2 2015
- Couplers available for cryostat Q1-2015
- Couplers RF processed 50 kW SW CW all phases Q4-2014
- Couplers assembled in clean room onto test box Q2-2014
- Special processes FPC + Test Box (Cleaning, Brazing, EB welding, Gold plating, Ti coating) completed Q1-2014
- All couplers + Test Box parts machined Q4-2013
- All missing raw material delivered Q2-2013
- All missing raw material ordered Q1-2013
- Design completed February 2013 **(+ Test Boxes)**

Schedule December 2013 (CERN)

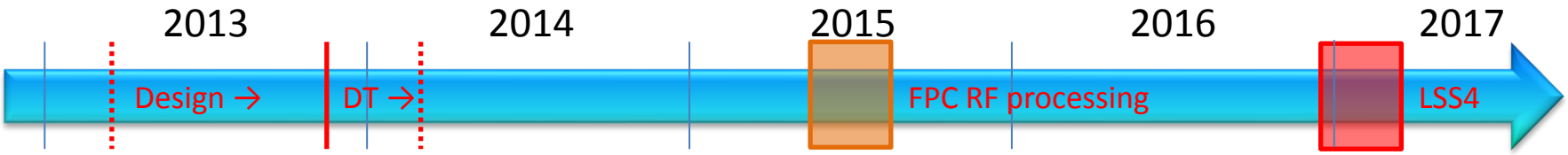

- Cavities to be installed in SPS in December 2016
- Cryostat fully tested Q3 2016
- Cryostat fully dressed Q2 2016
- Couplers available for cryostat end Q2-2015
- Couplers RF processed 50 kW SW CW all phases Q2-2015
- Couplers **+ DT** assembled in clean room onto test box Q1-2015
- Special processes FPC + Test Box (Cleaning, Brazing, EB welding, Gold plating, Ti coating) completed Q4-2014
- All couplers + Test Box parts machined Q3-2014
- All missing raw material delivered Q2-2014
- All missing raw material ordered Q1-2014
- Design completed February 2014 **(+ Test Boxes NEED DT definition)**

Tetrode Amplifiers

- The old 400 MHz amplifier has been refurbished from SPS
- Unfortunately, no water in our test bench this year due to LS1
- Water will be ok by April 2014
- From old tests : 40 kW CW
- With a better cooling we should be able to go up to 50 kW if needed (not guaranteed)

Circulators

- We decided to use the LHC 400 MHz 330 kW circulators
- We will buy two units and LHC team will provide one for test bench
- Drawback : they are huge
- This induces integration difficulties
- Amplifiers must be on the table
- We will design compact loads

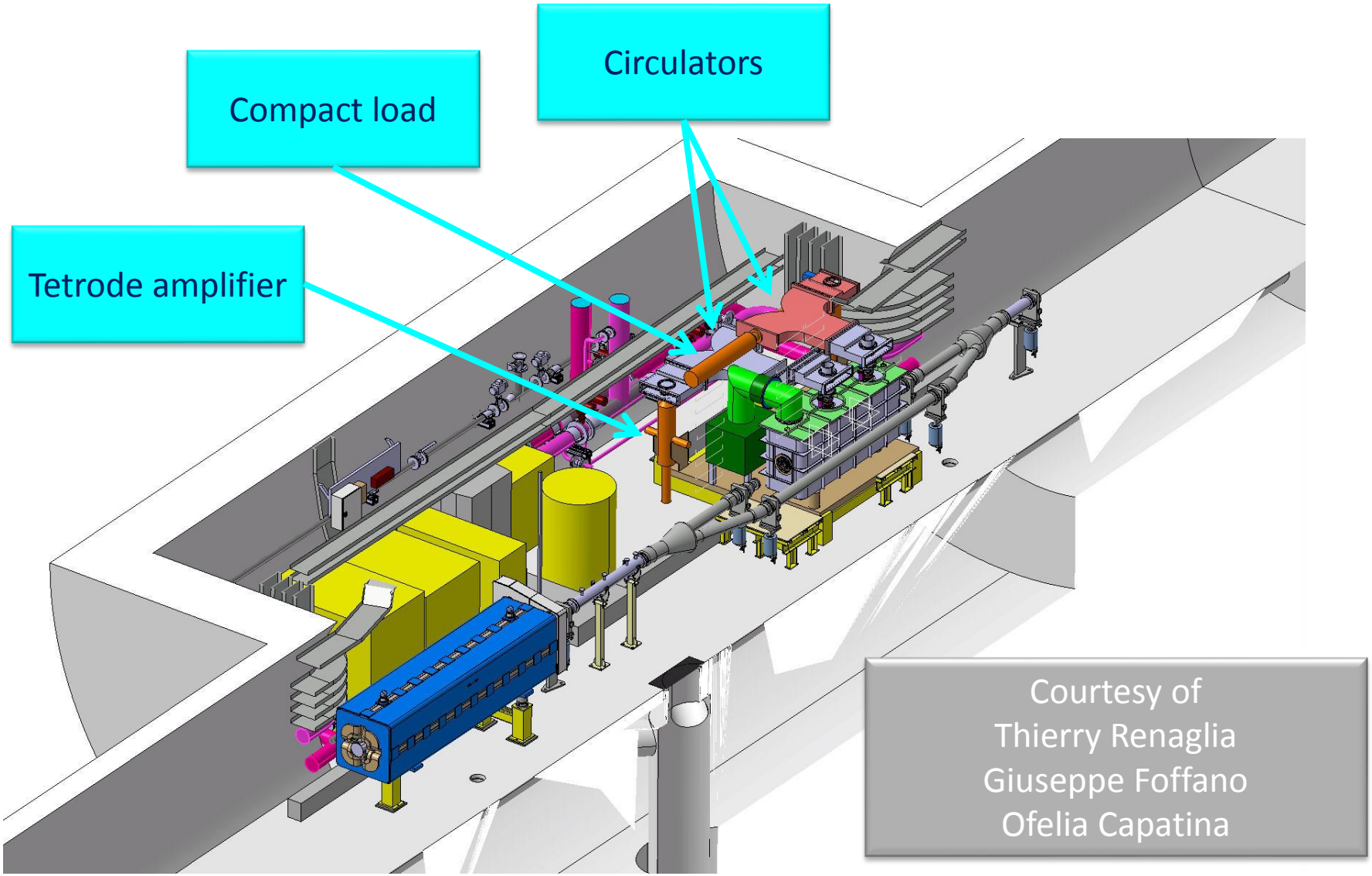
Circulators
Compact load
Tetrode amplifier
Courtesy of
Thierry Renaglia
Giuseppe Foffano
Ofelia Capatina

Driver amplifiers

- SSA in the power range between 2 kW and 4 kW
- 17 companies contacted
- 10 qualified
- Offers received, off the shelves SSA
- On-hold awaiting Tetrode amplifier test results in order to correctly define the output power level regarding tetrode amplifier gain
- They will be close to the LLRF racks in ECX4

Power supplies

- Existing one can be operated in test stand
- Two new systems have to be built for BA4
- Could be one HV power converter for the two amplifiers to reduce the cost

Conclusion

- Coupler design close to completion
- DT length must be defined asap
- Test boxes simulations have to be completed
- Tetrode amplifier still to be tested
- Integration difficult, however feasible
- Schedule … optimistic !

Thank you very much

For your Attention

Spare slides

SPL experience – arcing in air side

- Arcs are moving towards the RF source
- The explanation is probably the brazing shapes reducing the voltage breakdown capability along the ceramic
- Were not included in simulations

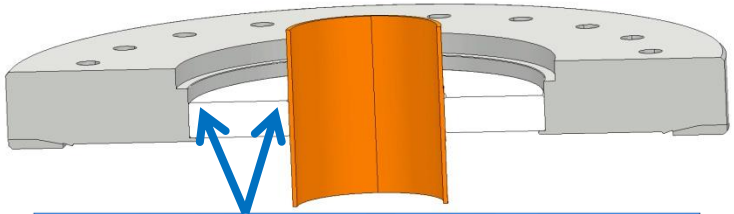

Perfect in drawing & simulation

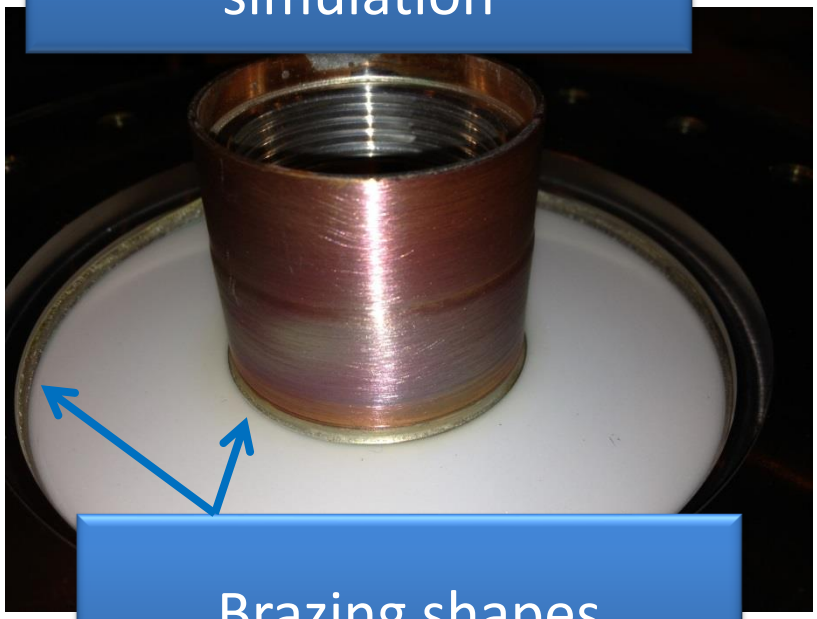

Brazing shapes

FPC – initial design

- We launched the purchasing of ten
  - Ceramics
  - Titanium flanges
  - Copper tubes
- Titanium & copper are already delivered
- Ceramics are about to be delivered

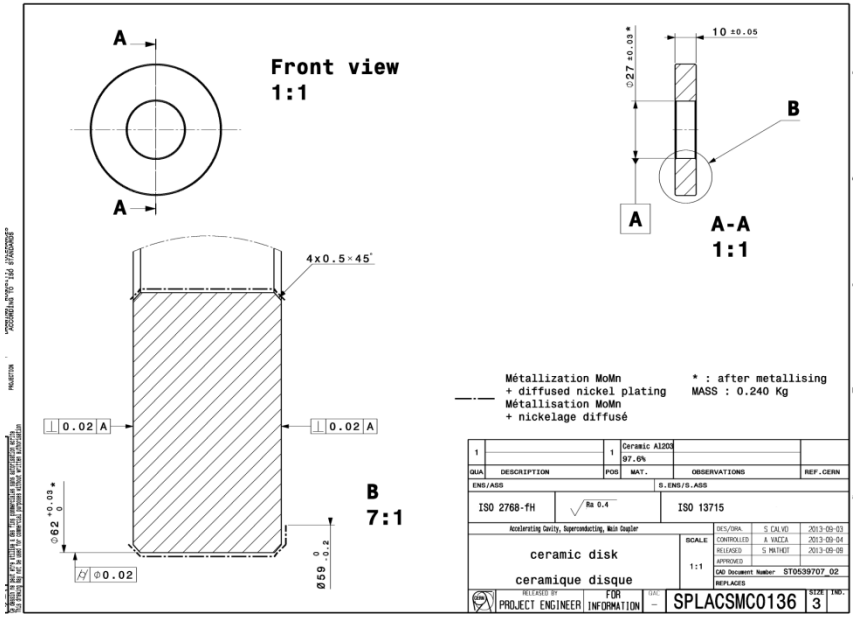

SPINNER || BROADCAST

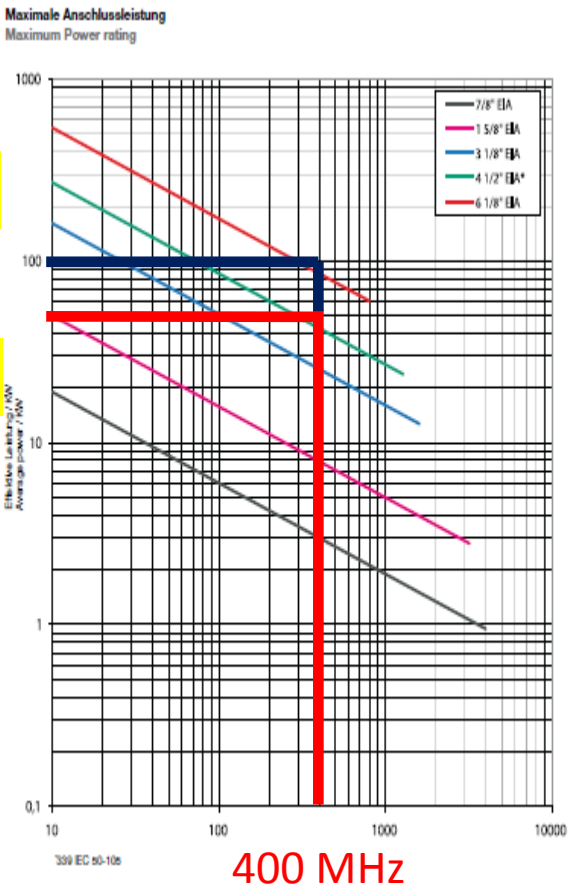

OD 180 mm

100 kW

50 kW

OD 115 mm

400 MHz

Power Rating

Data based on: Ambient T=40°C, Inner T=120°C

Exir Broadcasting

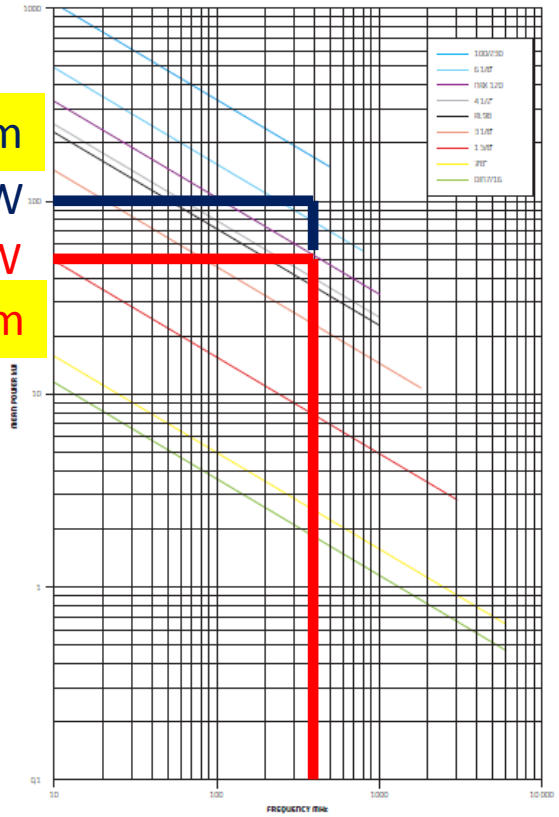

OD 200 mm

100 kW

50 kW

OD 120 mm

400 MHz

Key R&D results
Inner line with specific RF contact

- Air cane ensuring 1 MW RF contact :

  1. Inner ceramic is brazed with a stainless steel nut
  2. Air cane is built with a specific bolt
  3. Air cane is screwed compressing springs
  4. Springs ensure a good RF contact

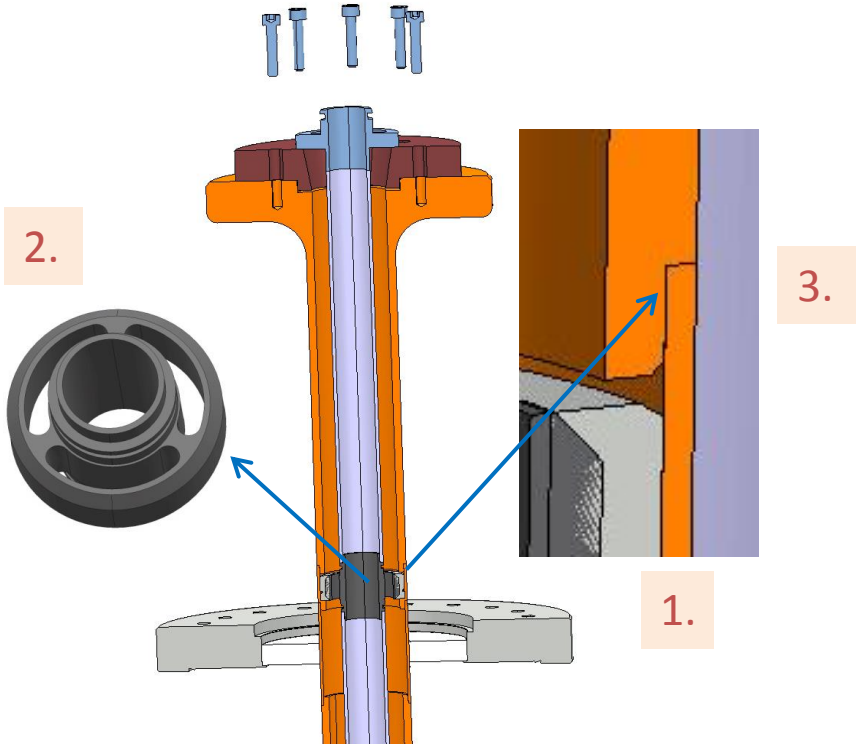

Key R&D results
Test box

- All in one, only two covers conditioning test box

- Pros :
  - Easier (not easy) copper sputtering
  - Self supporting shape
  - Easily cleanable for SRF needs, can be used for several sets of coupler (if large series : SPL, ESS, …)

- Cons :
  - Helicoflex faces to be very well prepared
  - Self-supporting structure : heavy weight