High Power RF System Status and Experience for the PLS-II Storage Ring

(CWRF2014)

(8th Continuous Wave and High Average Power RF Workshop)

May 13-16, 2014 (@ Hotel NH-Trieste, Italy)

CHUN, Myunghwan (mhchun@postech.ac.kr)

(**전 명 환 (**全 明 煥**)**)

On behalf of PAL RF group joined in the PLS & PLS-II Project

PAL (Pohang Accelerator Laboratory)
POSTECH, Pohang, Korea

Contents

Abstract

The RF system of the Pohang Light Source-II (PLS-II) storage ring is installed and operating at the 3.0 GeV/300 mA with three superconducting RF (SRF) cavities. PLS-II RF system was upgraded to 3.0 GeV/400 mA(max.) beam storage from 2.5 GeV/ 200mA of PLS. Each high power RF (HPRF) station is composed of a 300 kW klystron with power supply unit, transmission components including a 350 kW circulator and load, and water cooling system. Also three digital type LLRFs, three cryomodules with SRF cavities, and a cryogenic system are operating with HPRF system for the PLS-II storage ring. This paper describes the present operation status of 300 kW HPRF system and experiences of the former PLS 75 kW HPRF system. .

PAL site & Brief History of PLS & PLS-II

- Project started Apr. 1 1988
- Ground-breaking Apr. 1 1991
- 2-GeV Linac commissioning Jun. 30 1994
- Storage ring commissioning Dec. 24 1994
- User's service started Sept. 1 1995
- Energy ramping to 2.5 GeV Sept. 1 2000
- 2.5-GeV injection, Operation Nov. 1 2002
- 3.0 GeV PLS -II Upgrade Project 2009 ~ 2011
- PLS operation ended (2.5GeV) Dec. 2010
- PLS-II upgrade completed (3GeV) Dec. 2011

  operation to 250mA(3GeV) ~May 2014

  30 beamlines in operation

- PAL-XFEL Started construction May 2013~

Pohang Accelerator Laboratory; PLS-II

(3rd Generation Light Source 3GeV/400mA in 2012)

PAL site w/ PAL XFEL & Pohang city

(w/ 4th Generation Light Source PAL-XFEL 10GeV/60Hz in 2014)

Korean 4th generation Light Source: PAL-XFEL

0.1-nm Hard X-ray 10-GeV XFEL

- **Project Period: 2011 ~ 2015**
- **Total Budget: 400 M-US$**
- **Accelerator Length: 1.1 km**

- **Wavelength**
  - **Soft x-ray: 10 nm ~ 1 nm**
  - **Hard X-ray: 1.0 ~ 0.1 nm**
    - **Extendable to 0.06 nm**
- **Undulator Beamline**

  : 3 Hard X-ray / 2 Soft X-ray lines

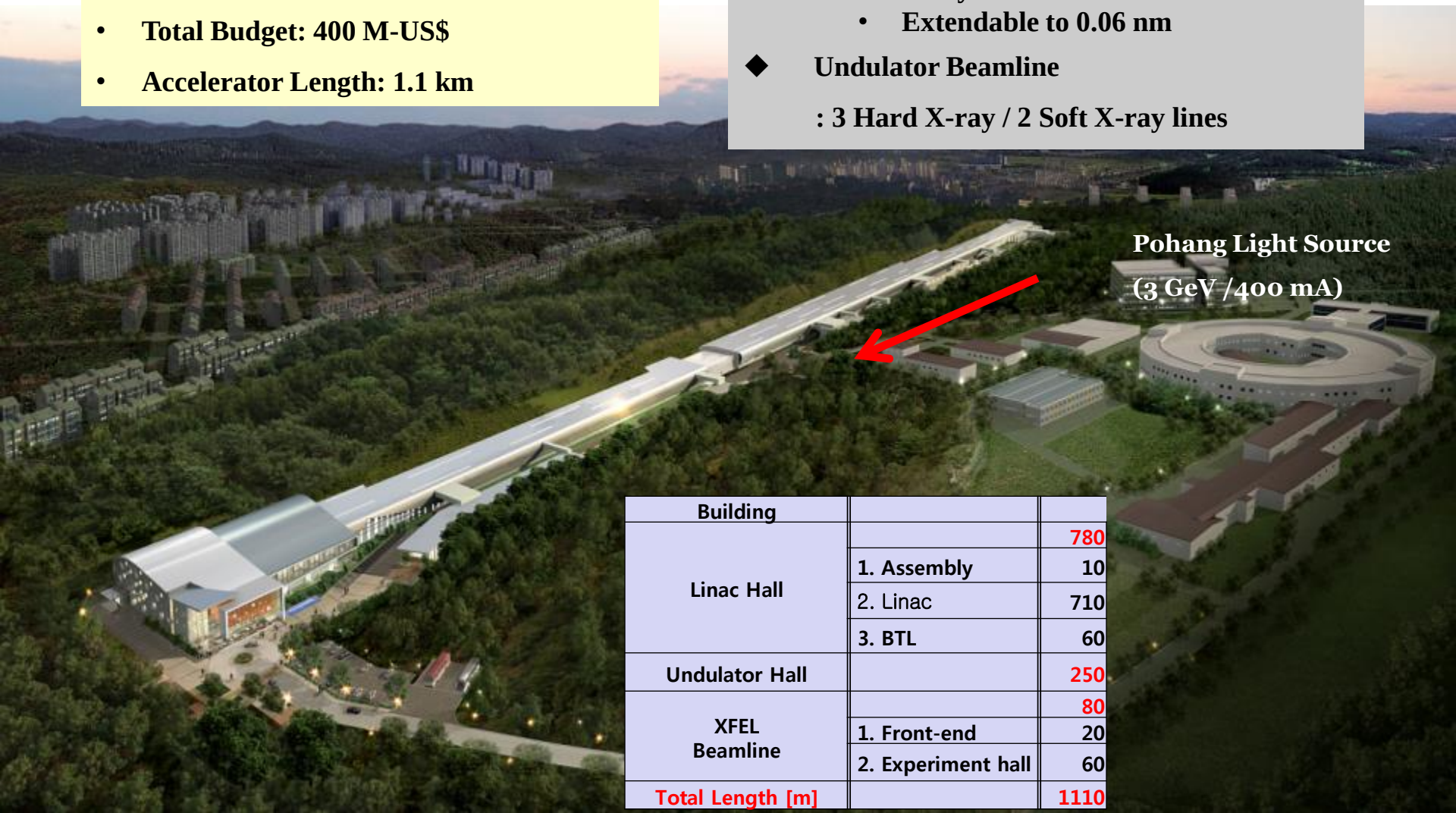

Building		
Linac Hall		780
	1. Assembly	10
	2. Linac	710
	3. BTL	60
Undulator Hall		250
XFEL Beamline		80
	1. Front-end	20
	2. Experiment hall	60
Total Length [m]		1110

Block diagram of PAL-XFEL (10 GeV / 60Hz)

(RF Gun, 2856MHz-80MW Klystrons, 200MW Modulators (46EA))

(Emittance0.4 mm-mrad <3 Undulators, 5 B/Ls: Hard & Soft X-rays)

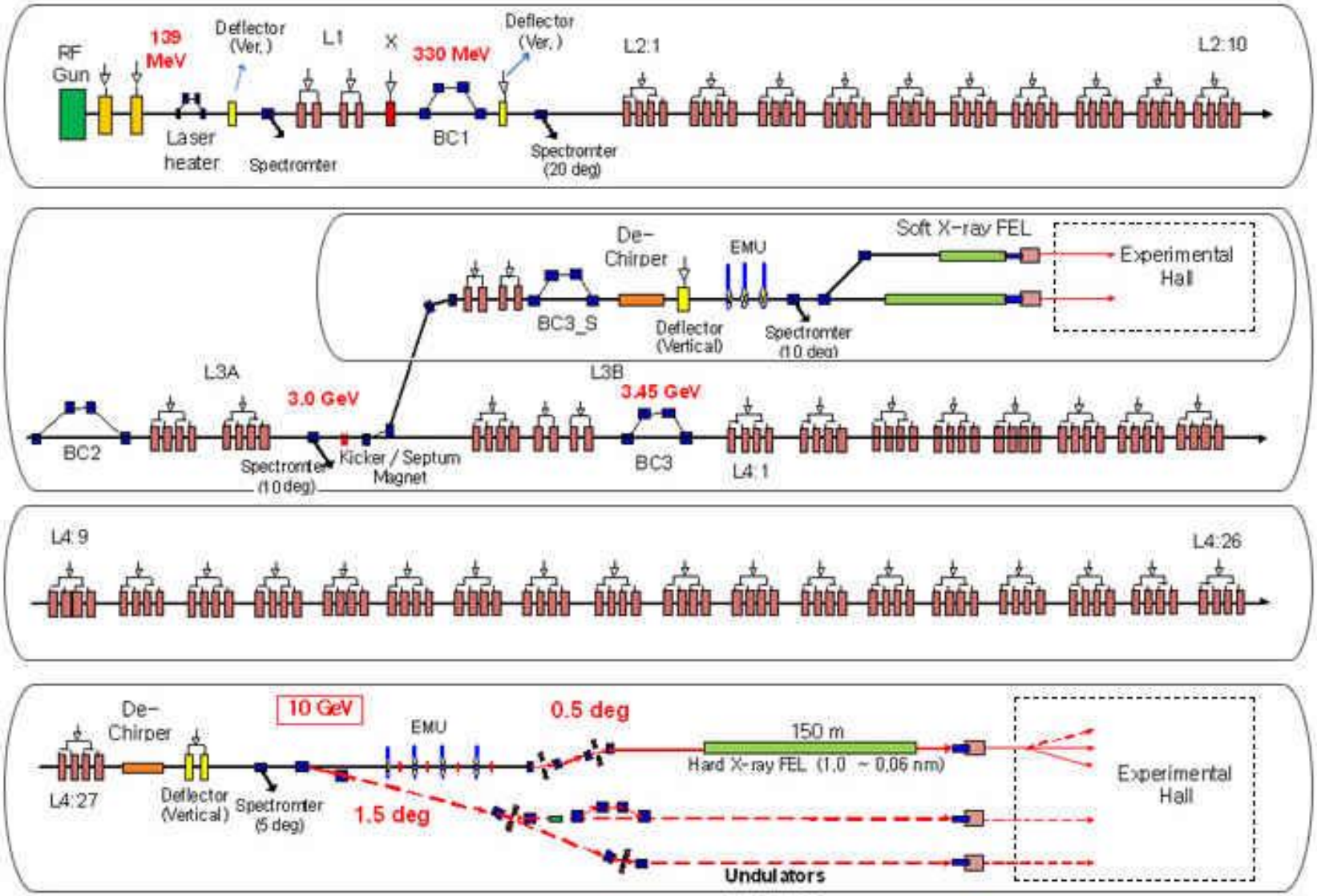

Outlook of PLS-II with Light Source Facility

- The upgrade program (PLS-II) has been officially launched with a project period of three years from 2009 to 2011. The main goals of PLS-II are the increase of straight sections for more insertion devices, the energy increase **from 2.5 GeV to 3.0 GeV,** a stored beam current from 200 mA to 400 mA, a relatively low emittance of 5.9 nm·rad, and more stable beam conditions. **On 2011 of project periods, the old PLS facility was shut-downed and components were built, and then the first stage commissioning of 100 mA with 3.0 GeV was finalized.** New beamlines and experimental stations were also relocated with newly established insertion devices (undulators and wigglers), while the existing insertion device beamlines were preserved. The PLS-II is to open for user experiments from 2012 after the international review for assessment of the PLS-II performance and readiness.

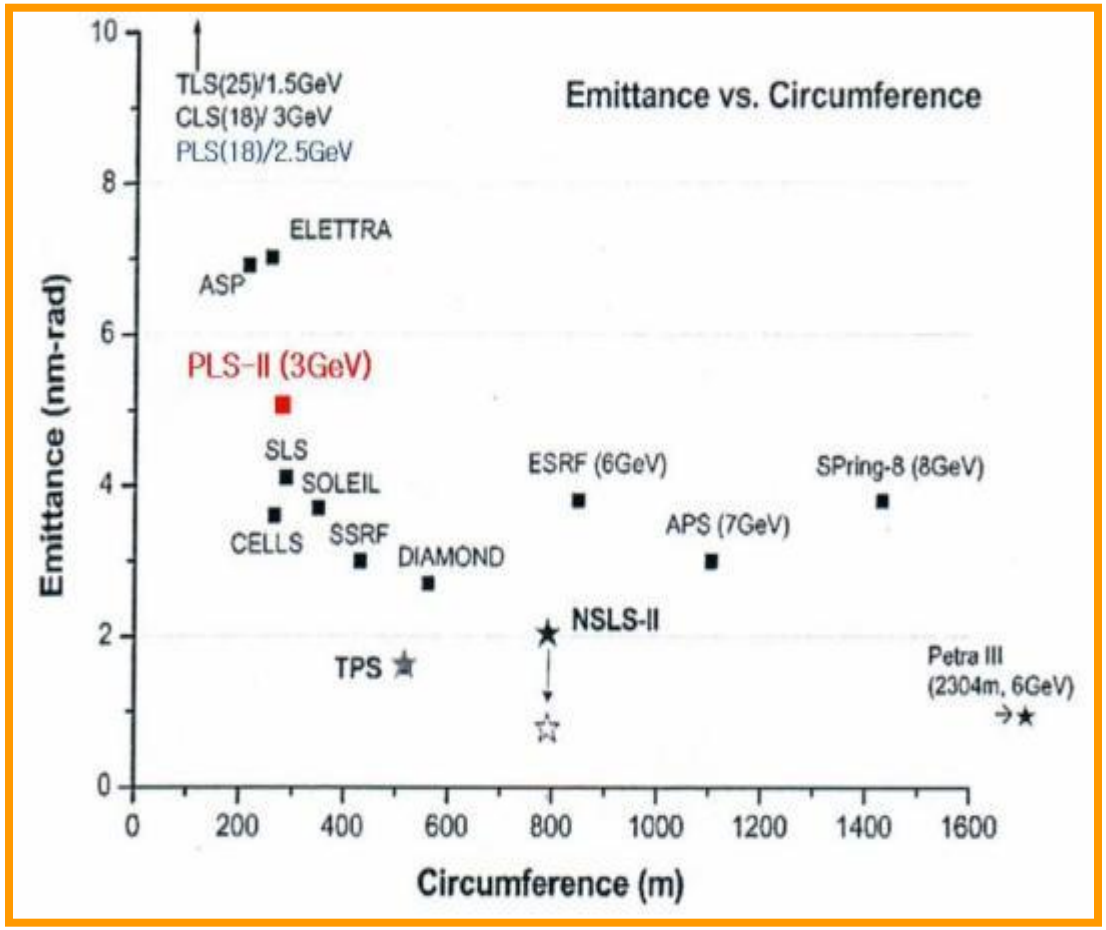

Cited from TPS CDR, 2008

PLS-II Linear accelerator

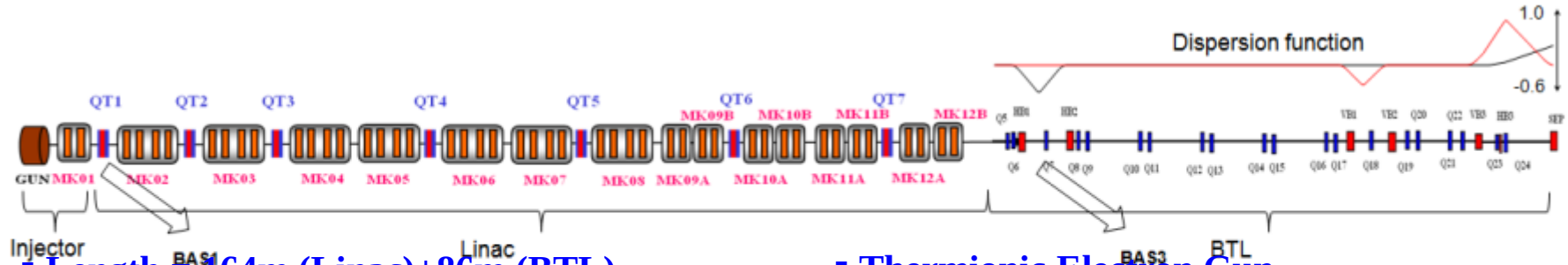

- Length = 164m (Linac)+86m (BTL)
- 3.0GeV, full energy injection
- 2,856 MHz (S-band)
- 10Hz, 1.5 ns, 1Å pulsed beam
- Normal Emittance: 120μmrad

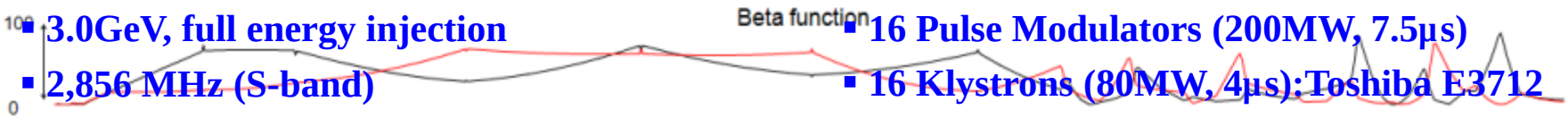

- Thermionic Electron Gun
- 16 Pulse Modulators (200MW, 7.5μs)
- 16 Klystrons (80MW, 4μs):Toshiba E3712
- 15 Energy Doublers (G=1.5)
- 46 Accelerating Sections

PLS-II Storage Ring

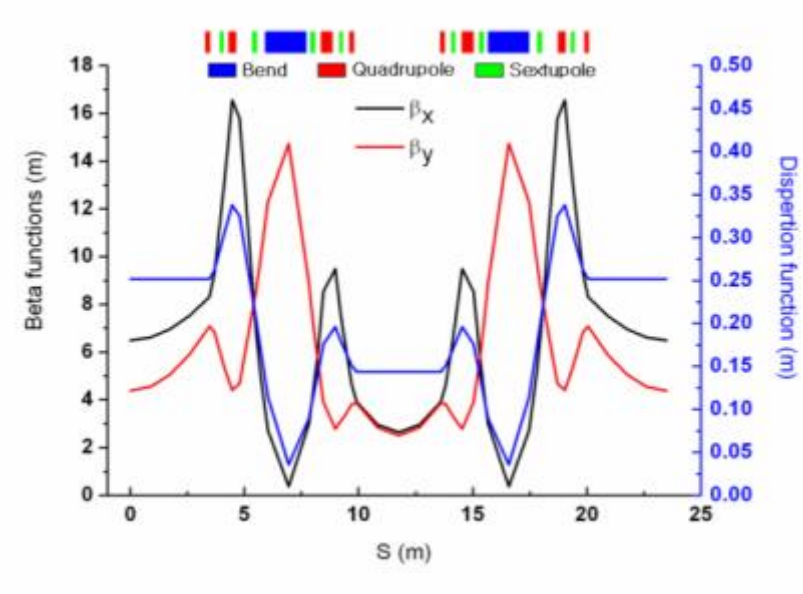

- Beam Energy 3.0GeV
- Beam Current 400mA
- Lattice DBA
- Superperiods 12
- Emittance 5.8 nm·rad
- Tune 15.245 / 9.18
- RF Frequency 499.97 MHz
- Energy spread 0.1%

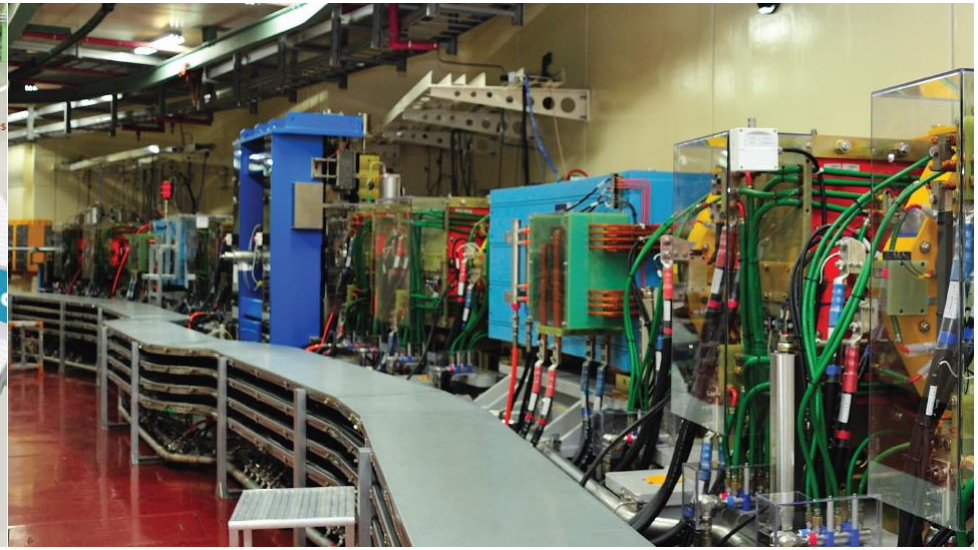

Parameters of RF System: PLS & PLS-II

Specification	PLS (1994~2010)	**PLS-II (2012~14)**
Energy/current	**2.5GeV/200mA**	**3.0GeV/400mA**
RF frequency	500.082MHz	499.654MHz
Circumference	280.56m	281.82m
Losses with IDs	~620keV	1,658keV
Beam Power	124kW	670kW
RF Cavity	NC x 4(5)	**SC x 3EA**
RF Source power	**75kW x 4(5)**	**300kW x 3EA**
Total RF power	300(375)kW	**900kW (SC)**

Parameters of PLS-II RF System (progress detailed)

Parameters	Commissioning (2011/9~2012/7)	PLS-II (2012/9~)
Energy [GeV]	3.0	3.0
Current [mA]	~100, decay	~400 Topup
Emittance [nm-rad]	-	5.9
Harmonic number	470	470
No. of Insertion Devices	14	20
Electron energy loss / turn - Dipoles [keV] - Insertion devices [keV]	 1042 140	 1042 200
Beam loss power by synchrotron radiation [kW]	145	500
RF frequency [MHz]	499.973	499.973
Cavity type	**NC (PF type)**	**SC (CESR-III)**
No. of RF cavities	**4**	**1→2→3**
Accelerating Voltage [MV]	1.8	4.5
RF Voltage per cavity [MV]	0.4~0.5	1.5
Klystron amplifier	**75 kW amps x 2** **300 kW amps x 1**	**300 kW amp x 3**
Cryogenic Cooling Capacity @4.5 K [W]	-	700

Parameters Comparison of HPRF System

Specification	PLS (1994~2010)	**PLS-II (2012~14)**
Klystron Amplifier	Modified **UHF Transmitter** (HVPS:25kV/6A→27kV/7A)	**KSU** (HVPS:55kV/12A) (Klystron Supply Unit)
Klystron Tubes	**e2v K3773BCD** (75kW) (YK1265 & K3762: 60kW)	**Thales TH2161B** (300kW /500MHz: 2012~)
Transmission Line	6-1/8" Coaxial Line 75 kW max. (dielectric, Spinner)	WR1800 W/G (MEGA & Korean Company)
High power Circulator (Load)	ATF 6-1/8" Coaxial (80kW) (80kW, 125kW Water Load)	AFT 350kW (350kW Ferrite Load)
RF Cavity	Single-cell PF type NC 70 kW max. (Toshiba)	250kW (RI Super-conducting; at Cryomodule w/Cryogenic)
Input Coupler	WR 1500 to Coaxial type 100 kW max.	Half WR1800 250kW max.

Configuration of PLS-II RF System (2014. 2. ~)

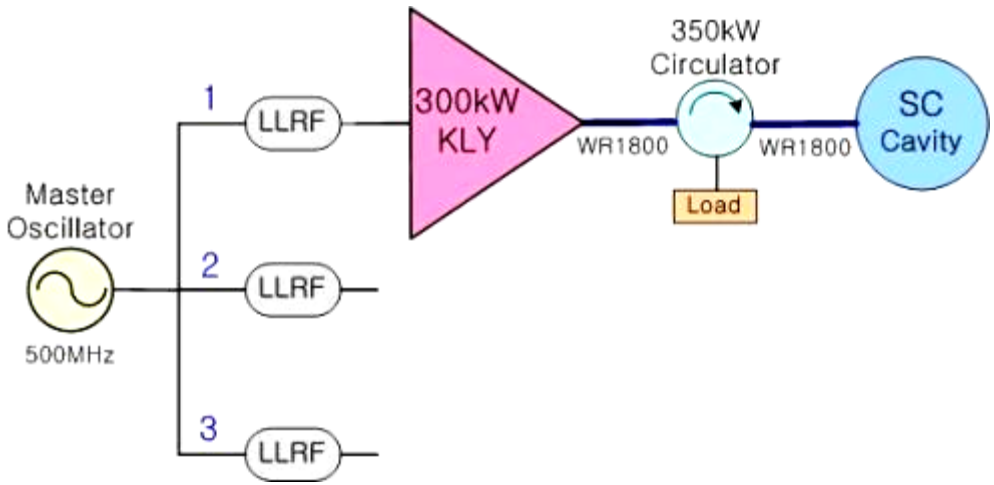

Components	Characteristics / Spec.
# RF station	3
RF cavity	superconducting , CESR-B type
RF Control (LLRF)	Digital type
Amplifier	Klystron , 300 kW
Waveguide	WR1800
Circulator	~350kW

Layout of PLS-II RF System (2014. 2.~)

(HPRF, LLRF & Cryomodules[RI], Cyrogenics [Air-Liquid])

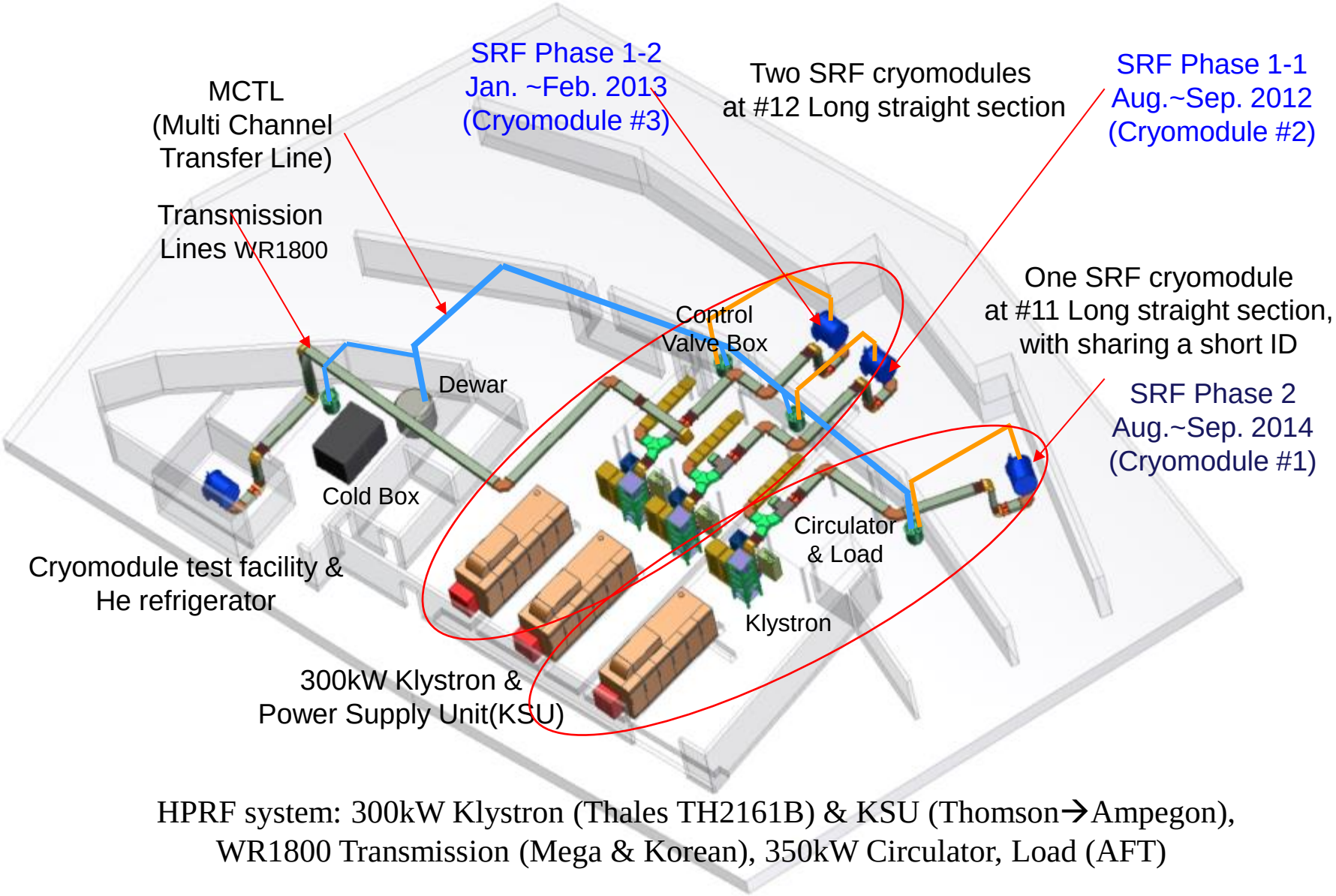

HPRF system: 300kW Klystron (Thales TH2161B) & KSU (Thomson→Ampegon),
WR1800 Transmission (Mega & Korean), 350kW Circulator, Load (AFT)

Pictures of KSU & 300kW Klystron

KSU(Klystron power Supply Unit) 55kV/12A
Maker: Thomson → Ampegon

TH2161B Klystron & 19"Racks
Maker: Thales

Block Diagram (THOMSON)

PSM(Pulse Step Modulation)

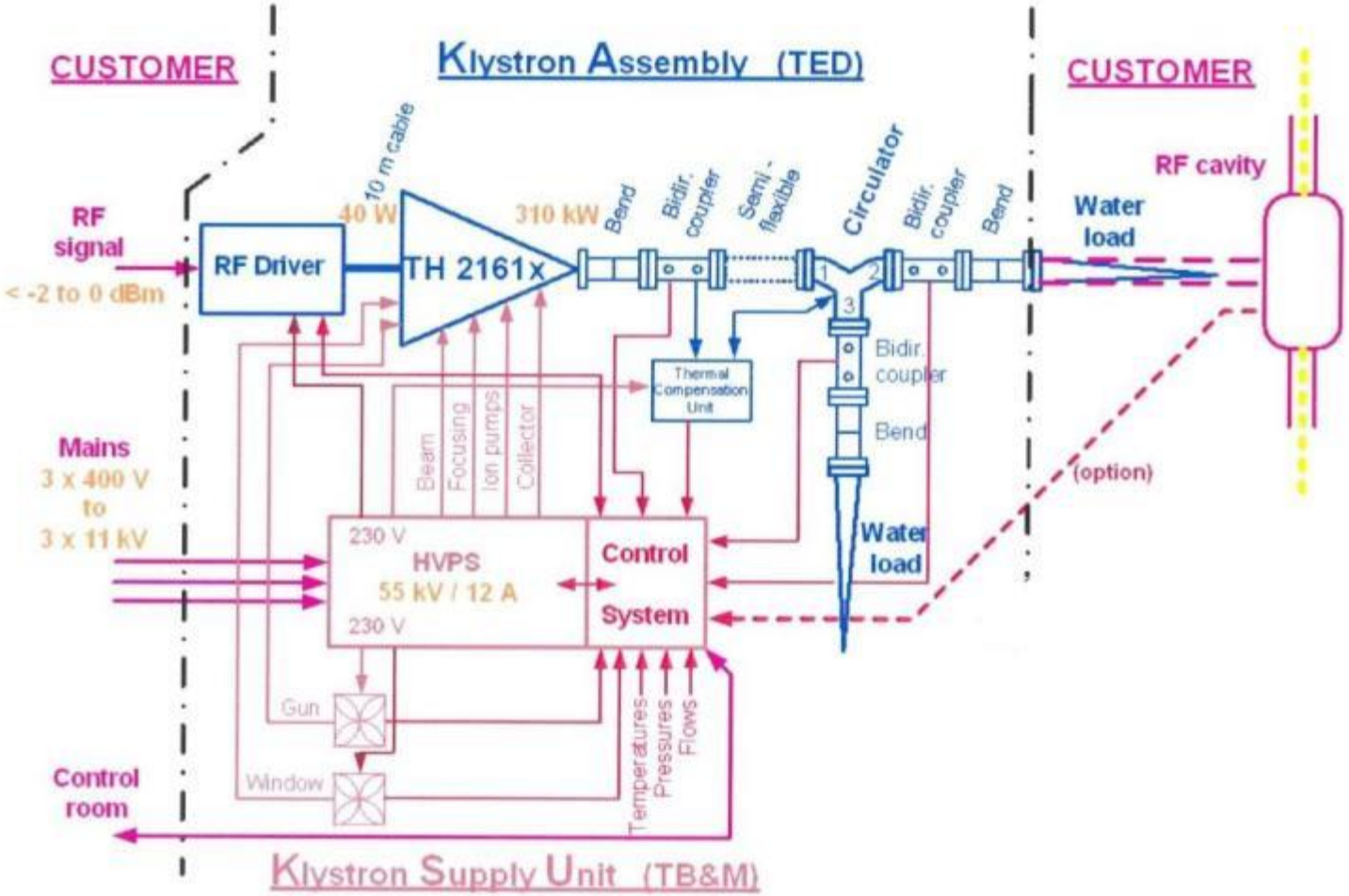

Thomson Broadcast & Multimedia

Thales Klystron (180, 250, 310kW)

SCIENCE
PARTICLE ACCELERATORS

TH 2161
TH 2161 A
TH 2161 B

High power CW klystrons

Up to 300 kW CW at 500 MHz

- Klystron range for use in synchrotrons and storage rings
- Three power levels: 180, 250 and 300 kW CW
- Minimum gain: 40 dB min
- High efficiency: 60 % min
- High reliability, long life
- Modulating anode

THALES

SCIENCE
PARTICLE ACCELERATORS

TH 2161
TH 2161 A
TH 2161 B

TH 2161

The TH 2161's family is the latest generation of CW klystrons specially designed by Thales Electron Devices as RF amplifiers for synchrotrons and storage rings. Operating at 500 MHz, they may deliver up to 300 kW CW (TH 2161 B version).
These five-cavity klystrons are fitted with a modulating anode to adapt operation to specific applications. They operate in vertical position. Collector and body are water-cooled, window and gun are air cooled.

These products are designed, developed and manufactured at an ISO 9001 registered production site.

RF performance

	TH 2161	TH 2161A	TH 2161B		
Frequency	500	500	500	MHz	
RF output power (CW)	180	250	300	kW	min.
Peak RF drive power	18	25	30	W	max.
Instantaneous bandwidth (-1 dB)	2	2	2	MHz	min.
Gain	40	40	40	dB	min.
Perveance	0.75	0.75	0.75	$\mu A.V^{-3/2}$	
Efficiency	60	63	63	%	typ.

Electrical characteristics

Heater voltage, ac or dc (1)	10	10	10	V	max.
Heater current (1)	30	30	30	A	max.
Peak beam voltage (1)	46	50	54	kV	max.
Peak cathode current (1)	7.5	8.5	9.5	A	max.
Anode voltage	28	30	32	kV	max.
Ion pump voltage	5	5	5	kV	

Electromagnet (built in)

2 power supplies:					
• dc voltage	100	100	100	V	max.
• direct current per coil (1)	12	12	12	A	

(1) The exact value is indicated on the Test Report accompanying each tube delivered.

Mechanical characteristics

Tube electromagnet and cart weight	1 250		kg	approx.
Tube height	3 100		mm	
RF input	N type 50		Ω	
RF output	WR 1800 waveguide			

This document cannot be considered to be a contractual specification. The information given herein may be modified without notice due to product improvement or further development. Consult Thales Electron Devices before making use of this information for equipment design.

For further information, please contact:

THALES ELECTRON DEVICES
2 bis, rue Latécoère - 78941 Vélizy Cedex - France
Tel: + 33 1 30 70 35 00 - Fax: + 33 1 30 70 35 35
www.thalesgroup.com/electrondevices

P.482-2001.04 - Photos : Thales Electron Devices

Remote Operation for three KSUs

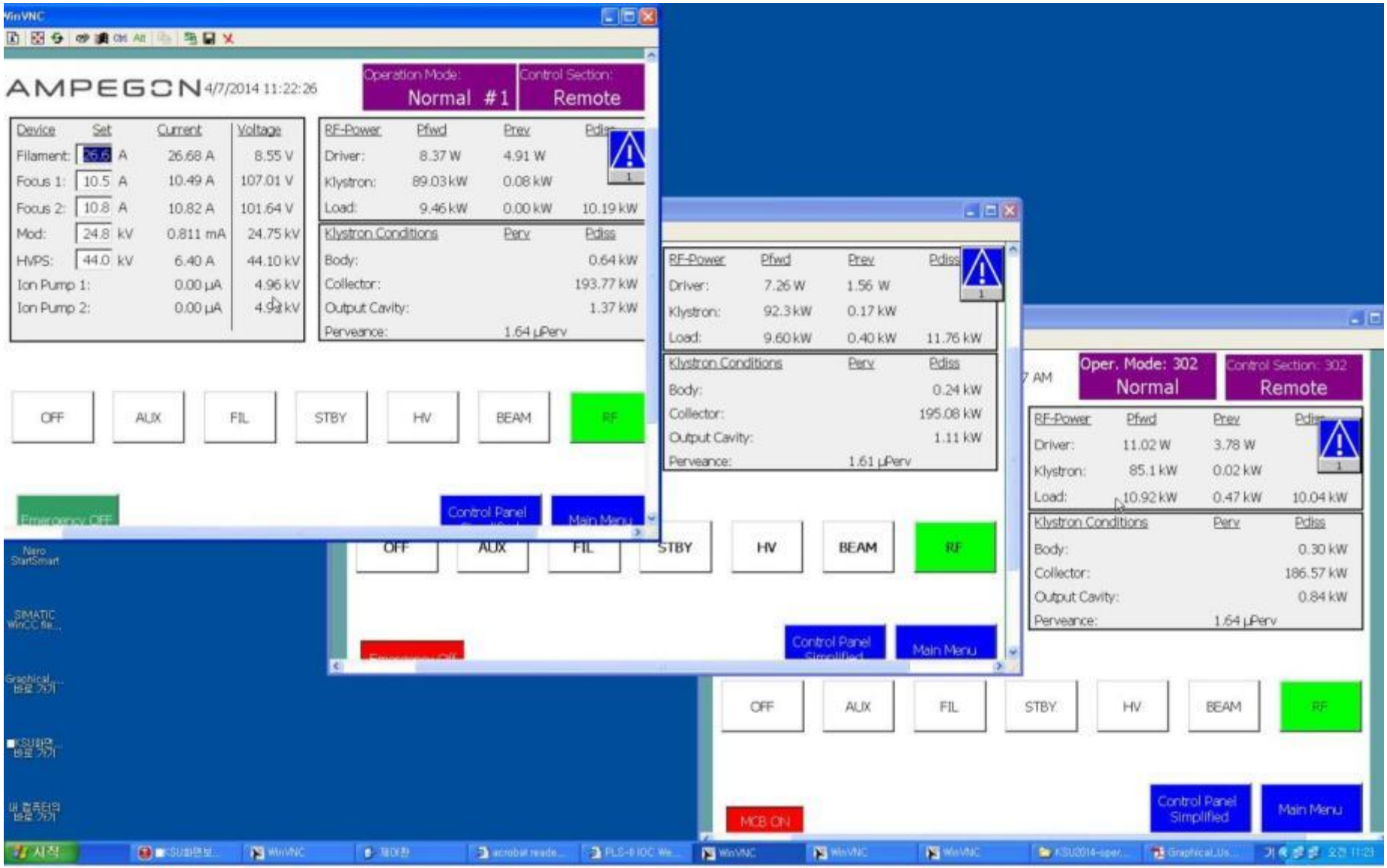

Similar SR HPRF system for Light Sources

http://www.lightsources.org/light-source-facility-information

2014. 5. 13.

SR / Lab.	Eenrgy	RF Sources	RF & P/S	Transmission	Circulator	Cavity
PLS-II / PAL	3GeV 400mA	TH2161B 300kW(3EA)	55kV/12A (Thomson)	WR1800	350kW (AFT)	SC (RI) x 3 (CESR B type)
(PLS) (~2011) / PAL	~2.5GeV 400mA	K3672 (60kW) K3773 (75kW)	UHF Transmitter	6-1/8" coaxial	75kW (AFT)	NC x 5 (KEK PF type)
SSRF / SINAP	3.5GeV 400mA	TH2161B 300kW(3EA)	55kV/12A (Thomson)	WR1800	350kW (AFT)	SC (RI) x 3 (CESR B type)
TPS (2015~) / NSRRC	~3.3GeV 400mA	TH2161B (2EA)	55kV/12A (Thomson)	WR1800	350kW (AFT)	SC x 3 (KEK type)
TLS / NSRRC	~1.5GeV 200mA	VKB-7953 & -B (70~100kW)(CPI)	Klystron HV power supply	6-1/8" coaxial	150kW (AFT)	NC(Doris) to SC(Accel) x 1
CLS Saskatchewan	1.9GeV 200mA	TH2161A 250kW(2EA)	55kV/12A (Thomson)	WR1800	350kW (AFT)	SC (RI) x 1 (CESR B type)
NSLS-II (2015~) / BNL	3.5GeV 400mA	TH2161B 300kW(3EA)	55kV/12A (Ampegon)	WR1800	350kW (AFT)	SC (USA) x 3 (CESR B type)
SLS / PSI	2.4GeV 400mA	TH2161 180kW(5EA)	50kV/10A (Thomson)	WR1800	250kW (AFT)	NC (Elettra type)
BSRF / IHEP	2.5GeV 200mA	TH2161 250kW(2EA)	50kV/10A (Thomson)	WR1500	250kW (AFT)	SC x 2 (KEK type)
Elettra Sincro. Trieste	2.0-2.4GeV 200mA	YK1265, K3672 (60kW) & IOT TH793 (80kW)	UHF & IOT Transmitter	6-1/8" coaxial	75 , 200kW (AFT)	NC (Elettra type)
DIAMOND UK	3.0GeV 400mA	IOT (80kW) 2 x 4 IOTs	IOT (e2v) Power Supply	6-1/8" & WR1800	200kW (AFT)	SC (RI) x 2 (CESR B type)
ALBA Spain	3.0GeV 400mA	TH793LS (80kW) 6 x 2 IOTs	HVPS (Thomson) Power Supply	6-1/8" & WR1800	Cavity Combiner	NC-DAMPY (Bessy EC type)

Proposal of Collaboration for Similar SR HPRF system of Light Sources and Accelerators

- **CWRF workshop**: Good example for CW HPRF experts
- Closely Collaboration for information, RF technology, man-powers
- Mini-workshop groups for similar HPRF system: half day, informal

  1) 300kW Klystron w/ KSU & SC : PLS-II, NSLS-II, CLS, SSRF, TPS

  2) Thales Klystron and Thomson KSU : PLS-II, NSLS-II, CLS, SSRF, TPS, SLS,BSRF

  3) Klystrons : almost Light Sources and Accelerators Laboratory

  4) IOTs : DIAMOND, ALBA, ELETTRA, NSLS-II(Booster) etc.

  5) SSPA : SOLEIL, ESRF, PSI, ILSF(Iran), IBS(Korea) etc.

  6) Vacuum Tubes (Triode, Tetrode) : CERN, IHEP, etc.

  7) HPRF system with NC or SC Cavity Technology
- Workshop with Sponsor of suppliers for service, repair, spares
- Exchanges for expensive spare parts and emergency recovery

Installation, 1st Module @ SR Tunnel

Installation, 2nd Module @ SR Tunnel

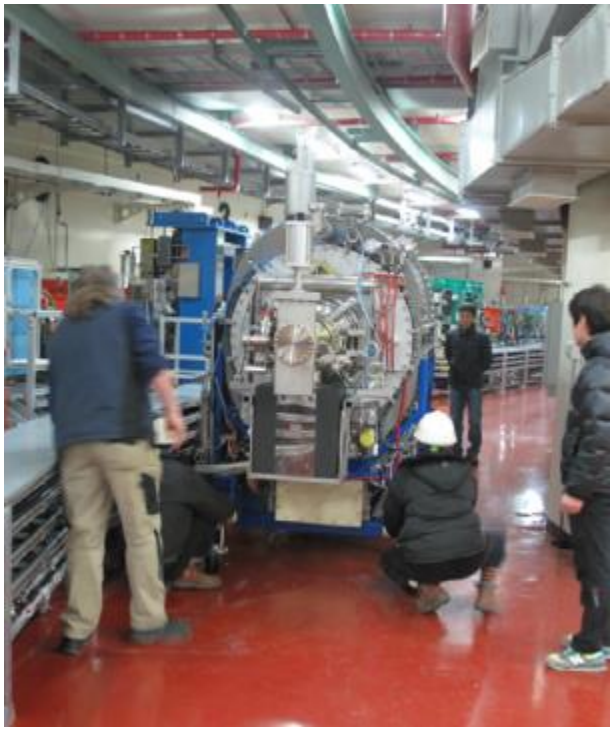

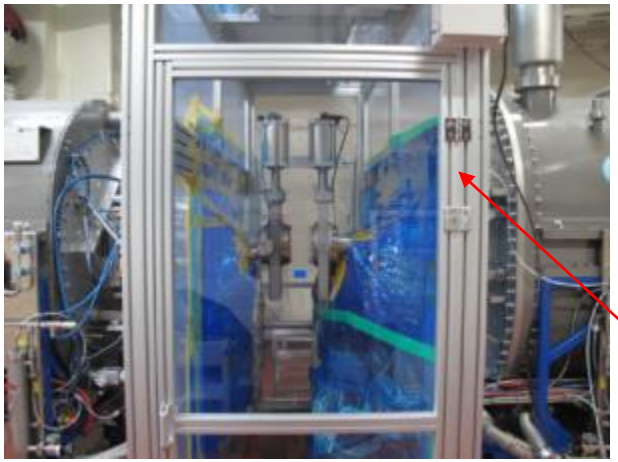

Portable Clean Room, class 10
for connecting two cavities

SRF Cryomodules & WR1800 W/G

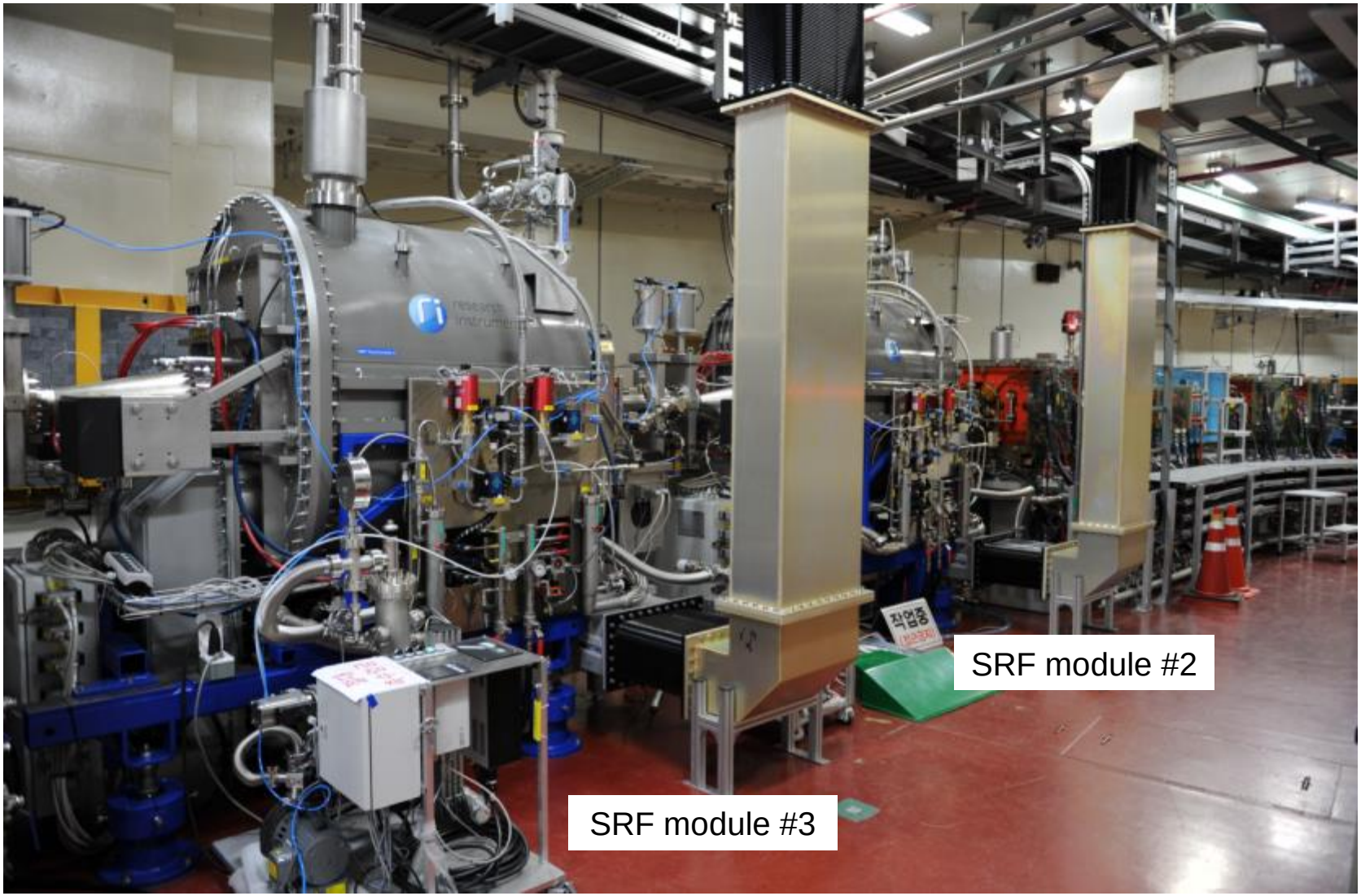

Schematic diagram of Cryogenic system

700 W refrigeration capacity at **4.5K**

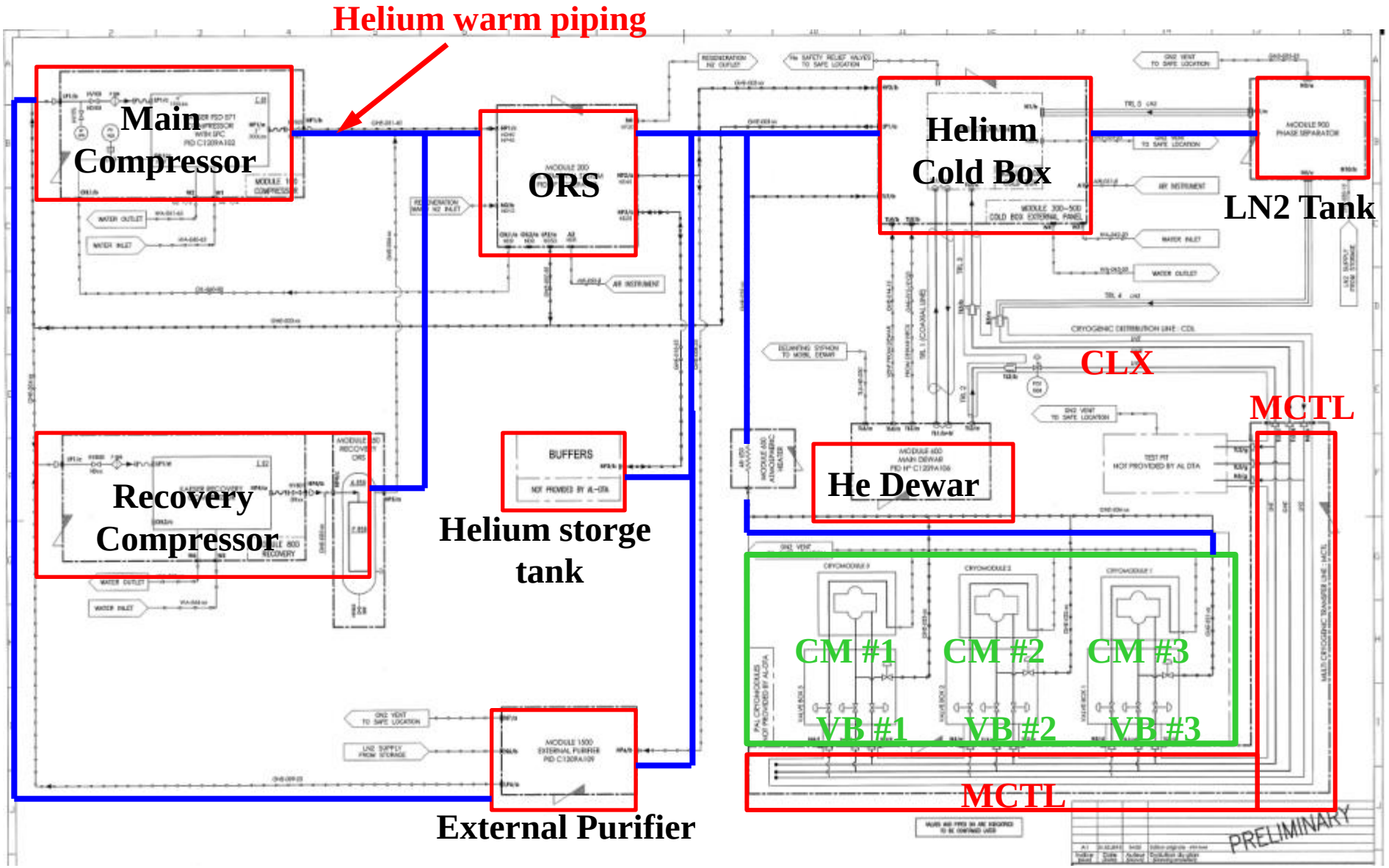

Layout & pictures of Cryogenic system

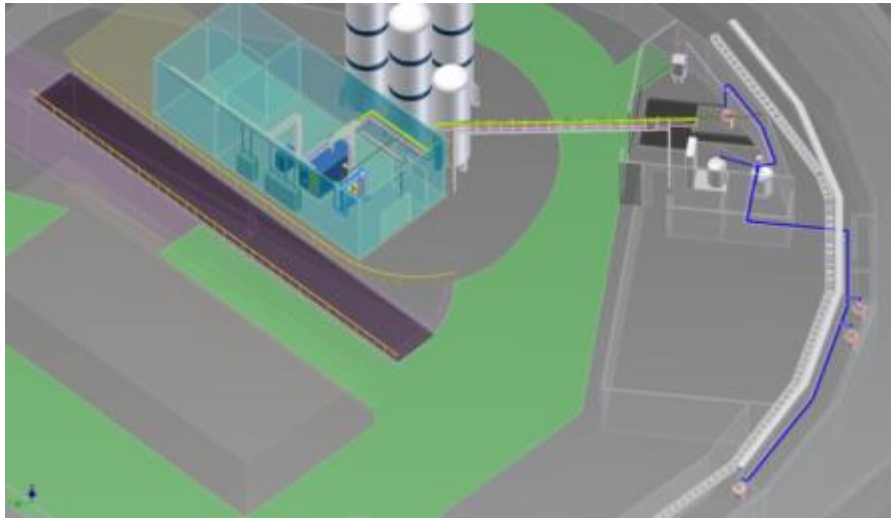

Cryogenic system Layout

Compressor

ORS(Oil Remove System)

Installation of the building and tanks

Cold Box & Control Rack

Low Level RF System Block diagram

(Digital type : cooperation with Jefferson Lab)

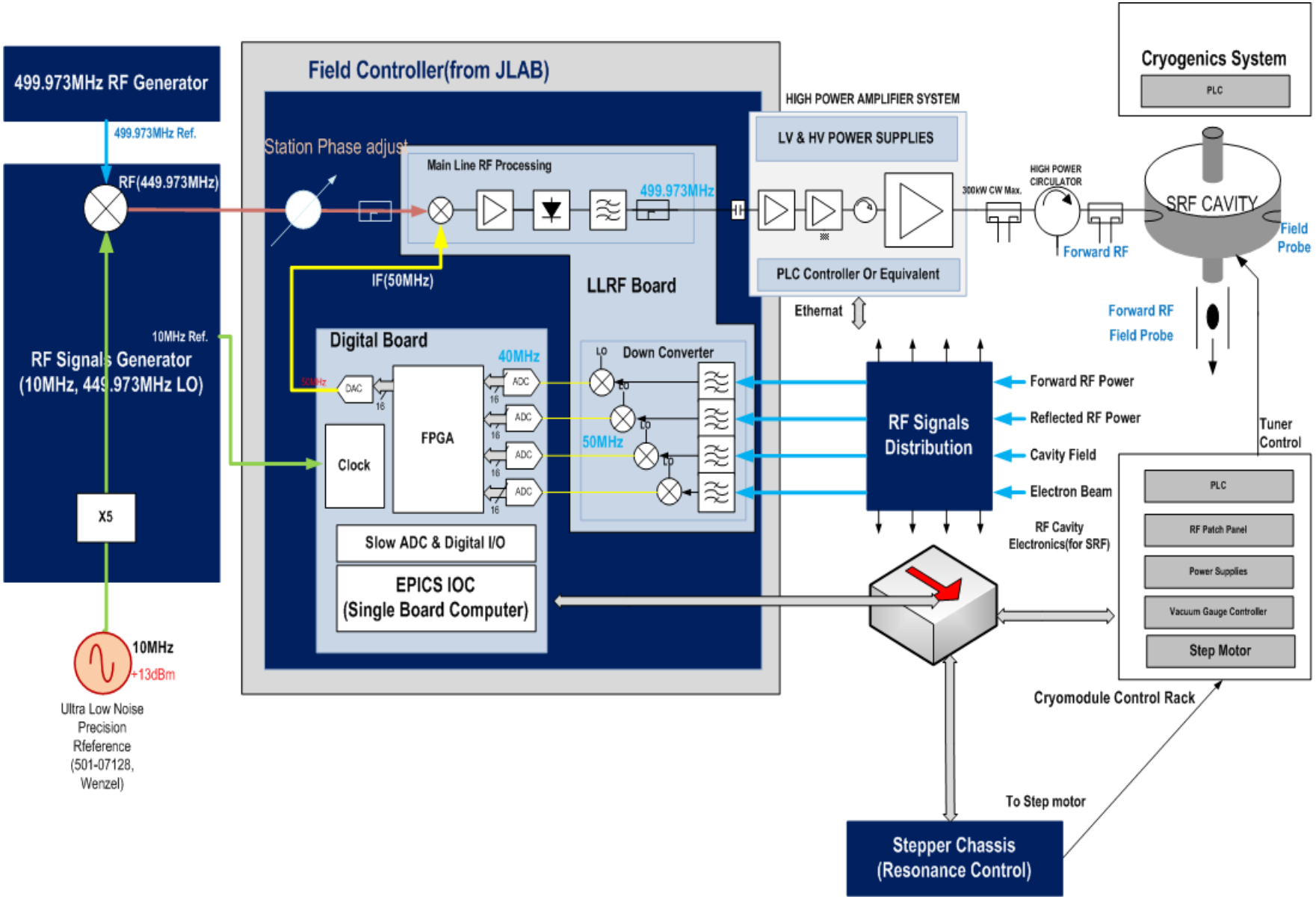

Faults Status of PLS-II with SRF System in the 1st half year 2013

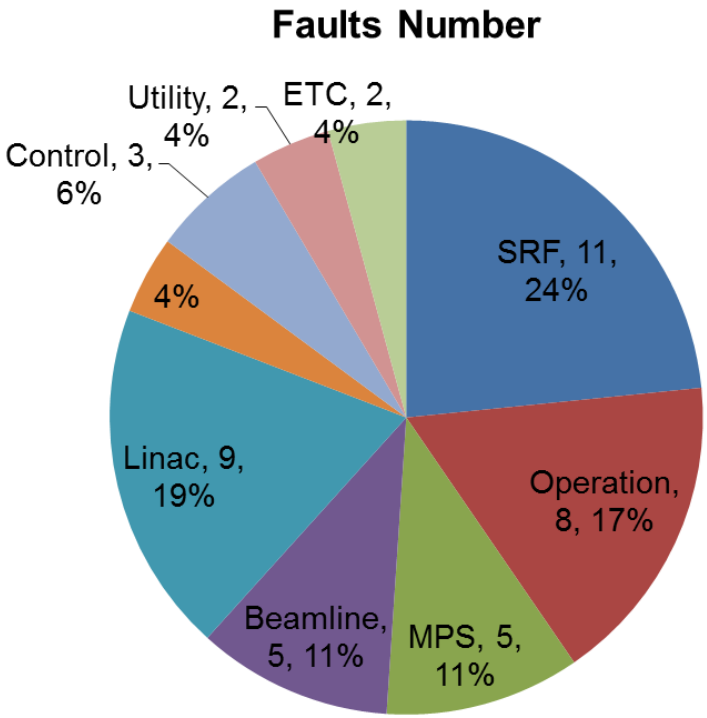

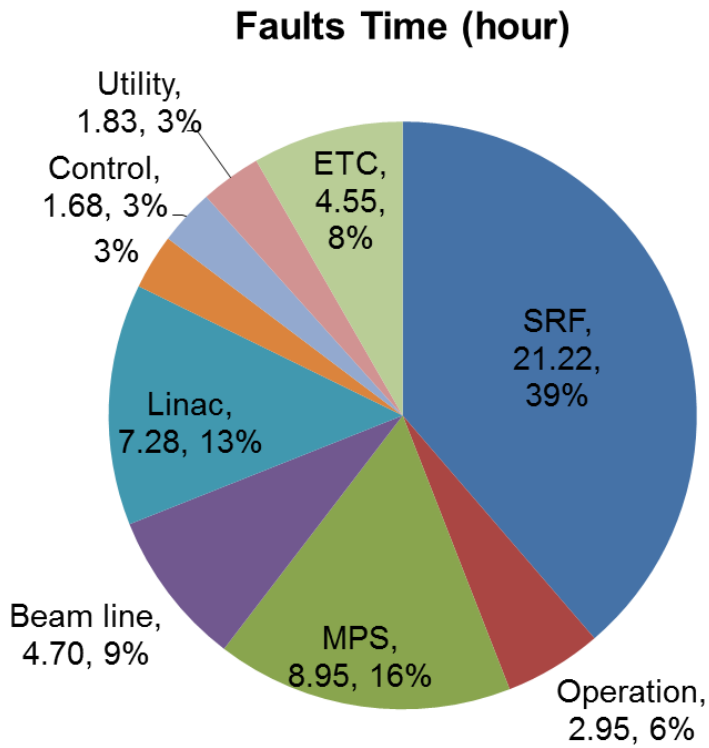

- Mean Time Between Failure : 176 hours (7.3 days)
- Fault times of SRF system : 21.2 hours (39%)
- Fault number of SRF system : 11 times (24%)

Operation Status of Yearly Beam Current (operation & planing)

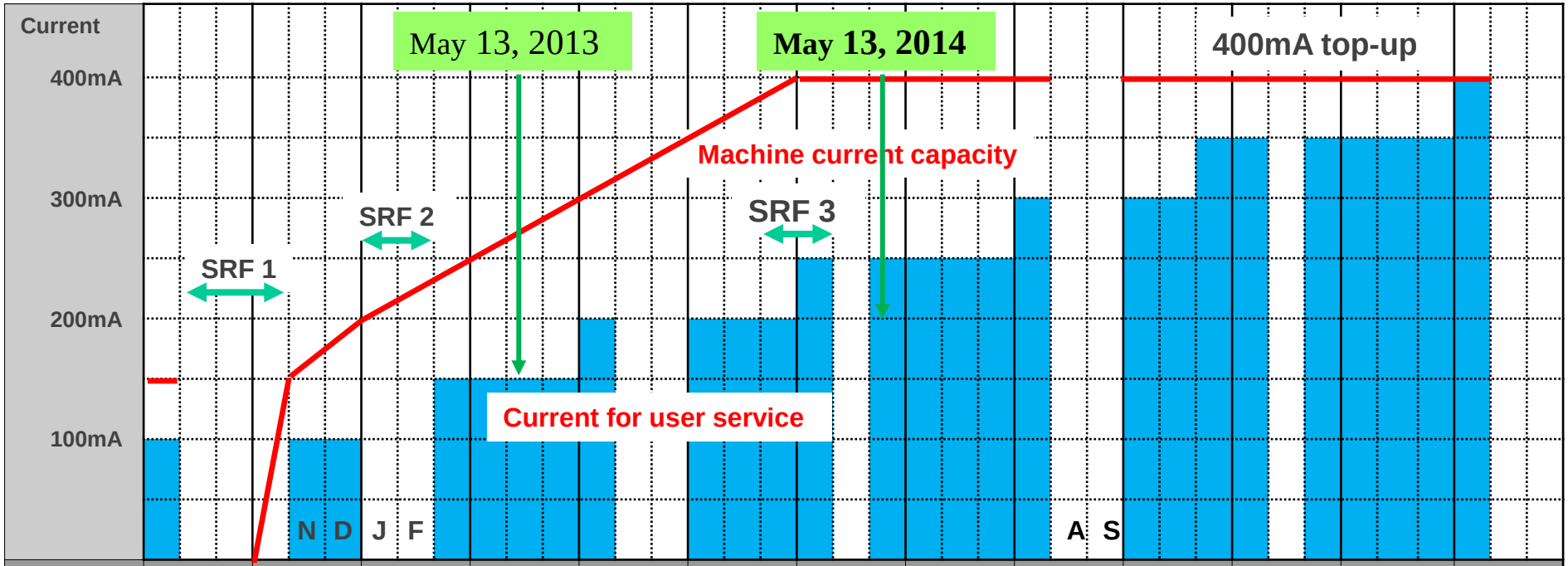

Quarter	3	4	1	2	3	4	1	2	3	4	1	2	3
Year	2012		2013				2014				2015		
Remark	1 SC cavity User beam:100mA Touch: 200mA		2 SC cavities User beam:150mA Touch: 300mA		User beam:200mA Touch: 400mA		User beam:~250mA w/ 3 SC		3 SC cavities User beam:300mA		User beam:350mA		400mA
RF voltage	2.0 MV		3.3 MV		3.3 MV		3.3 MV		4.5 MV		4.5 MV		4.5 MV

Operation Status of PLS-II RF 05/09/2014 @200mA

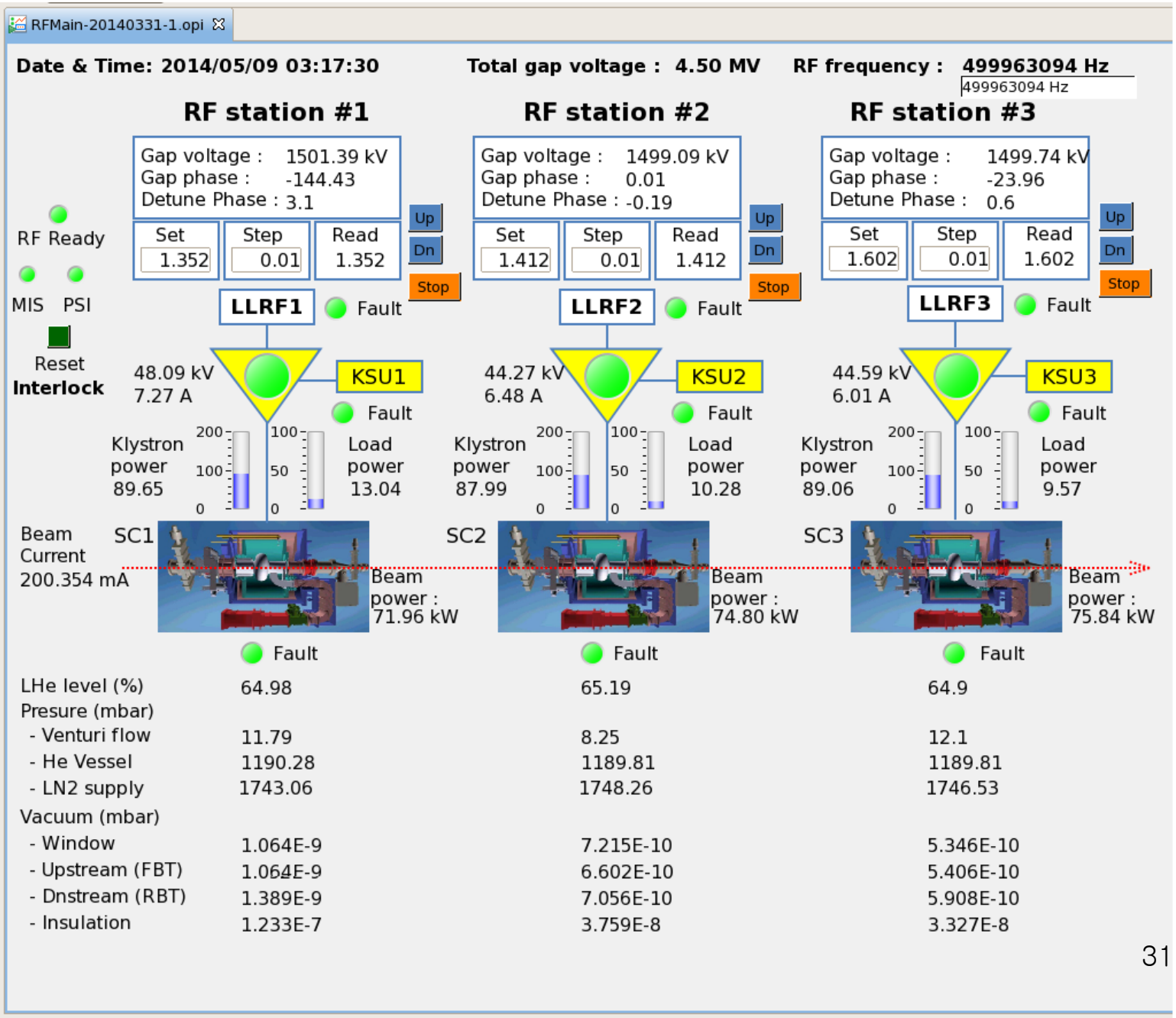

RF Spectrum KSU1-klystron output

w/ Load 300kWmax @SAT (2013.02)

(mains: 60Hz -69dBc / 120Hz -63dBc / 180Hz -64dBc)

(KSU noises: 5.17kHz -62dBc / 10.3kHz -70dBc)

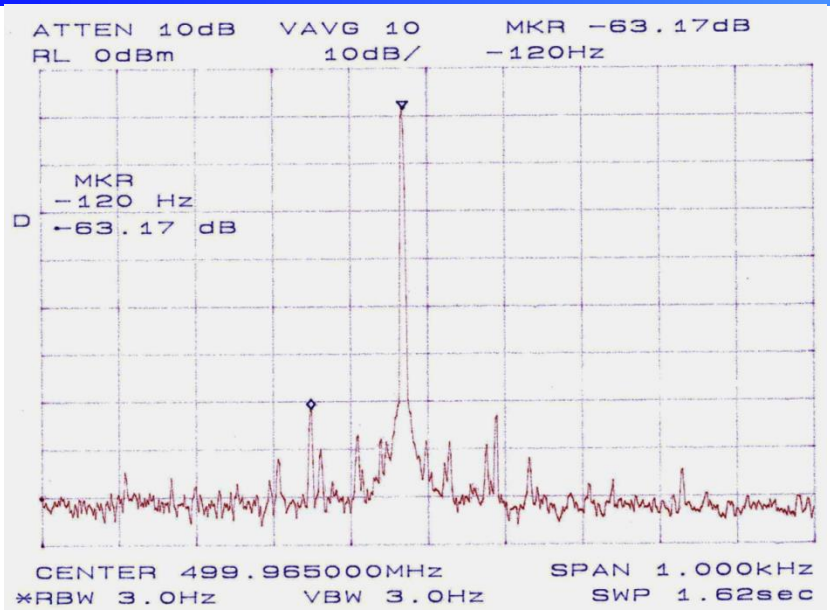

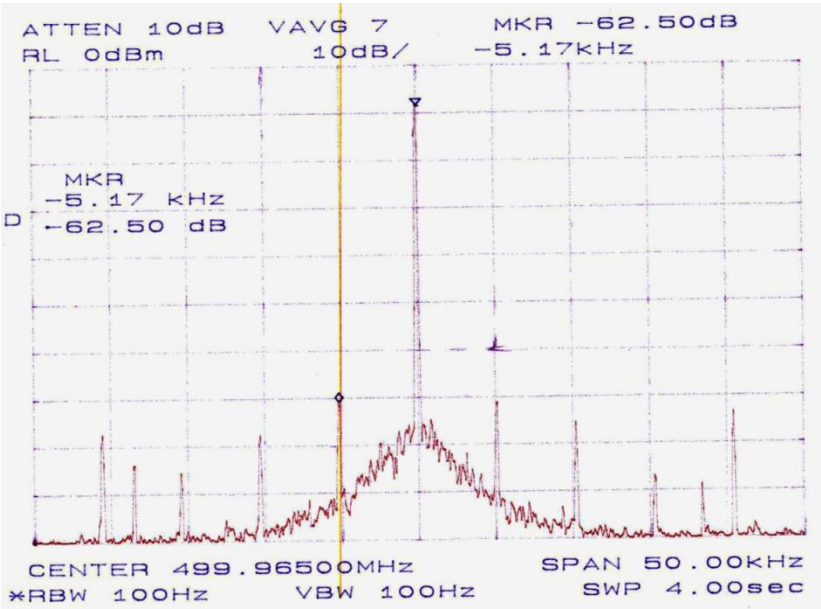

RF Spectrum KSU1,2-klystron (Mains & LLRF noise) @0mA

(mains: 60Hz -60dBc / 120Hz -56dBc / 180Hz -65dBc)

(LLRF : 10Hz -58dBc / 30Hz -50dBc / 50Hz -46dBc / 100Hz -56dBc)

(KSU switching noises : 10.3kHz -60dBc @ 200mA)

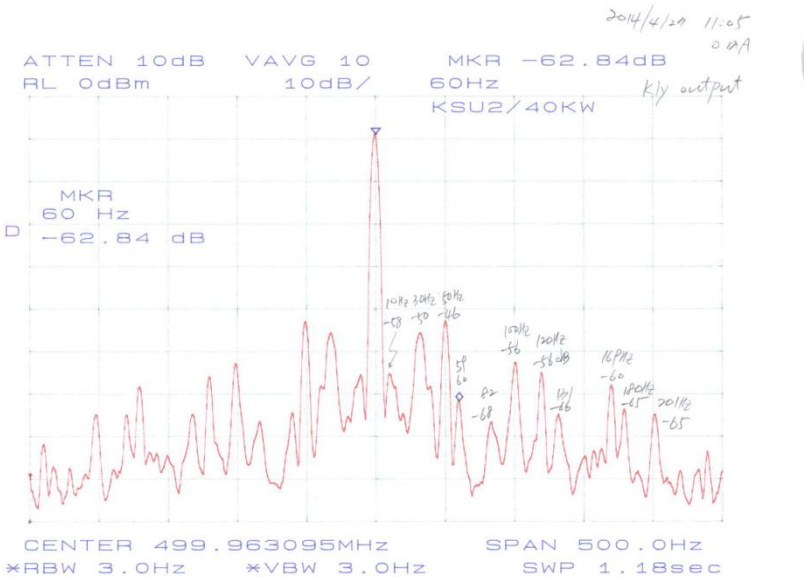

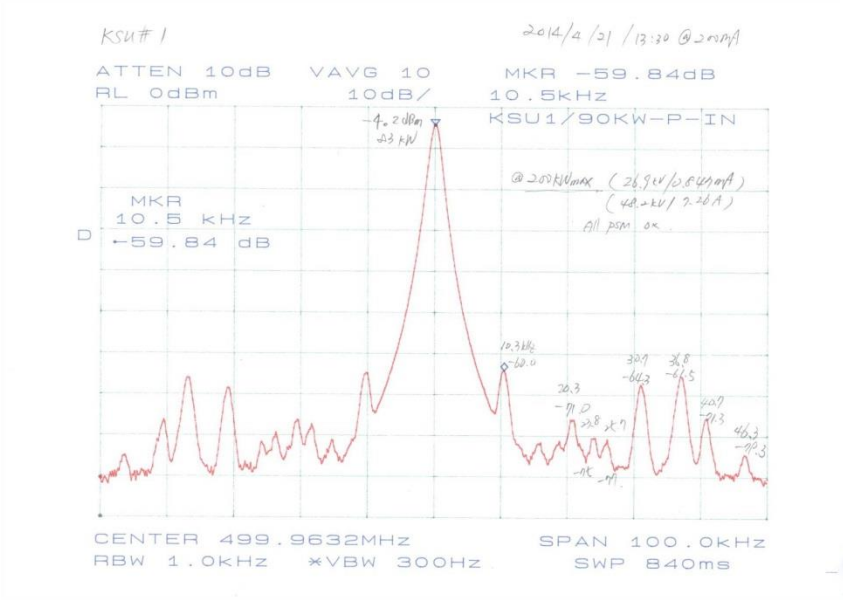

PLS: 75kW Klystron Amplifier R&D

Three 75kW Klystron Amplifiers (mainly power supplies) were R&D and fabricated , operated at PAL for PLS RF power upgrade.

Klystron Amplifier	**75kW / 500MHz (~2011)** **(300kW /500MHz: 2012~)**
High Voltage Power Supply	**27kV/6A 외 (52kV/12A)**
Klystron Tubes	Philips YK1265 & E2V K3773 (75kW) (Thales TH2612B)
Transmission Line	6-1/8” Coaxial 75 kW max @500MHz (WR1800 W/G)
High power Circulator	ATF 6-1/8” Coaxial,80 kW (AFT 350kW & Load)
RF Cavity	70 kWmax. (Normal Cavity) 250kW (Super-conducting)

75kW Klystron Amplifier for PLS
(PAL RF Test Lab)

PLS 75kW RF System Layout 2 (~2010)

- The RF system for the PLS storage ring was operated at total maximum RF power of **375kW with five 75kW** klystron amplifiers and five PF-type normal conductivity (NC) RF cavities for 200mA at 2.5GeV until year 2010 as PLS status.

PLS 75kW RF System Layout 1 (~2008)

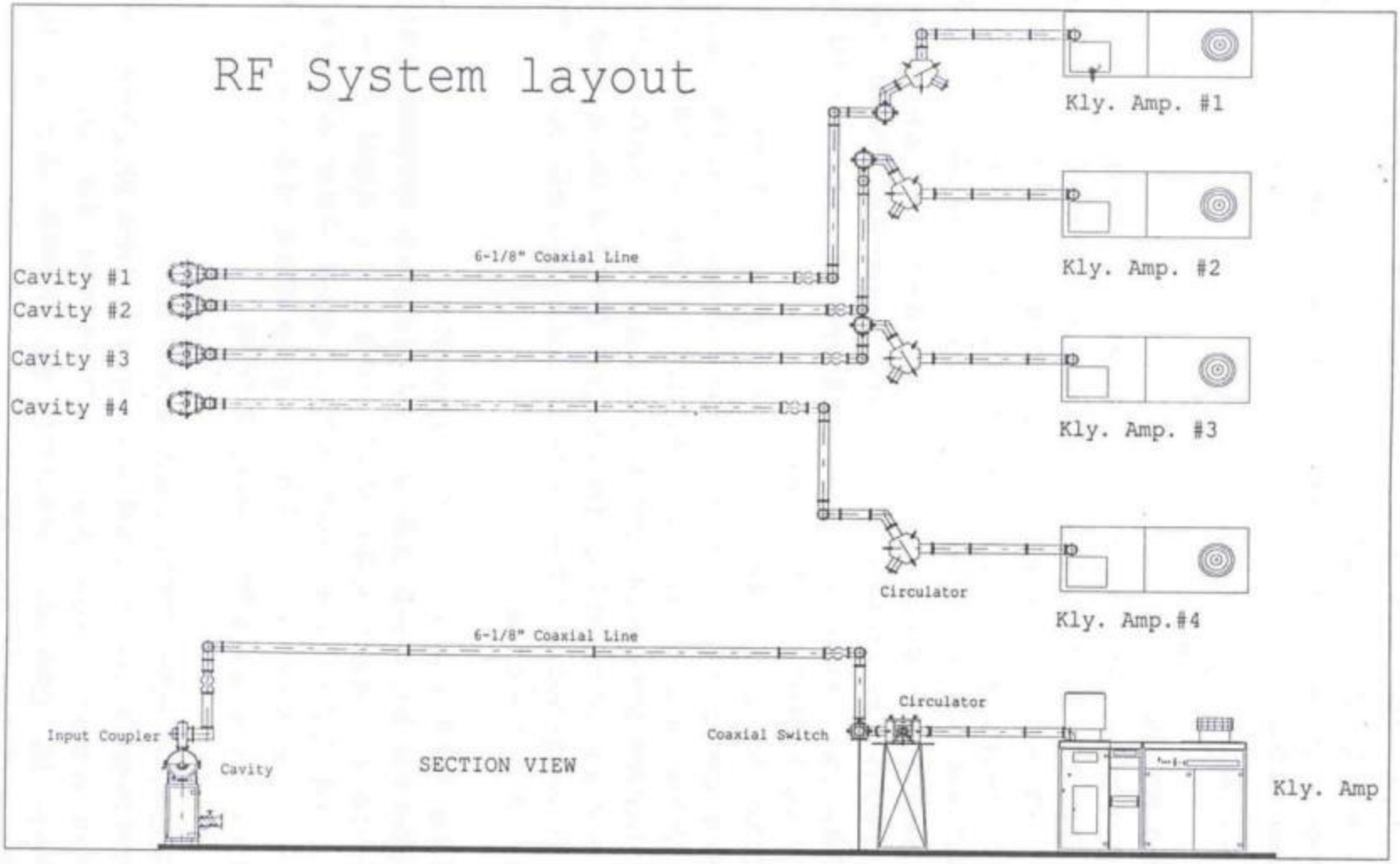

PLS 75kW RF System Layout 2 (~2010)

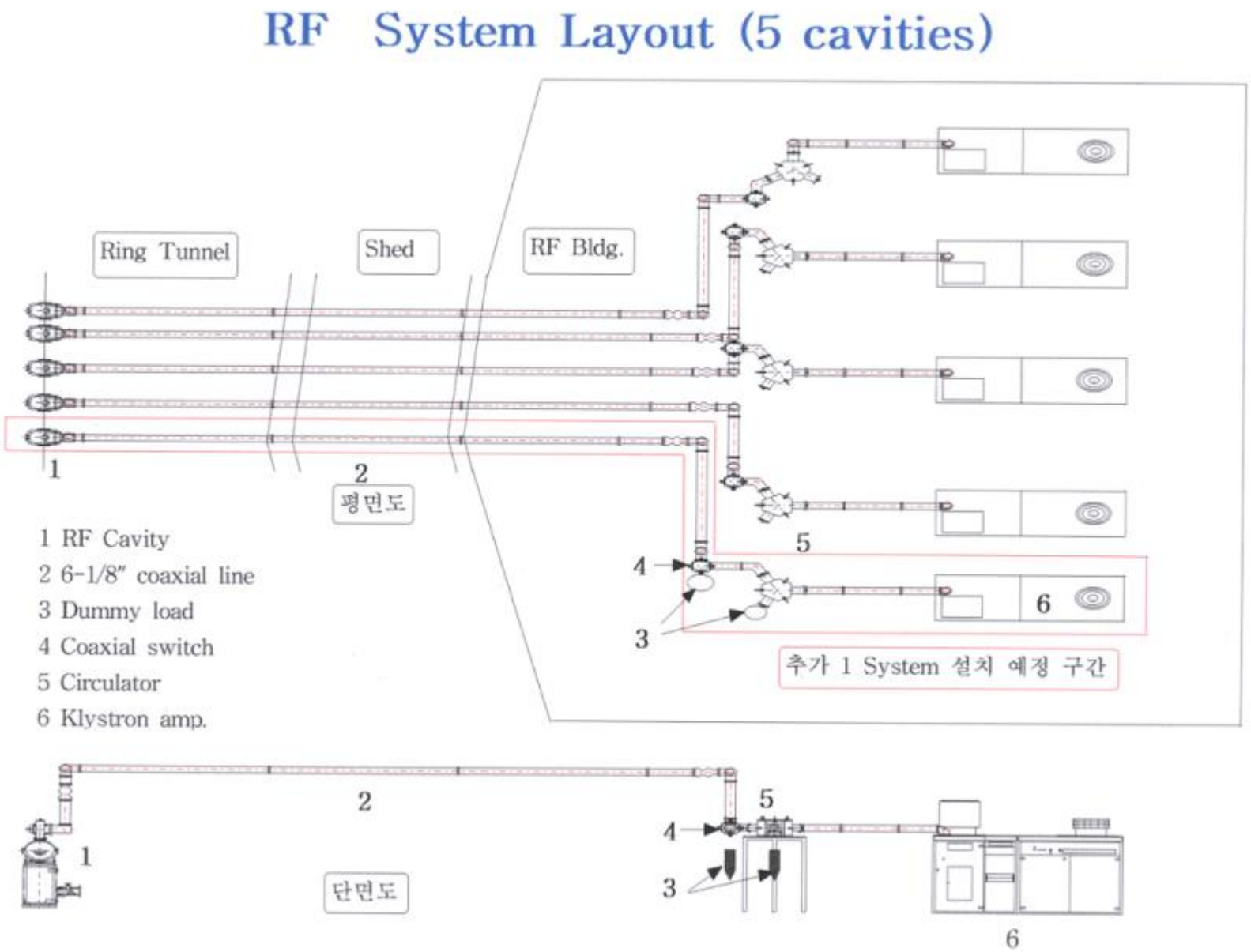

Operation Example of the 75kW Klystrons

Klystron Amp.		**KA#1**	**KA#2**	**KA#3**	**KA#4**	***KA#5***
Maker /Model (S/N)		Marconi K3773 (160-0222)	E2V /K3773 (164-0230)	E2V /K3773 (169-0347)	E2V /K3773 (160-0121)	E2V /K3773 (171-0349)
Operation hours(tube) Klystron amplifier	hrs hrs	*22,500* *51,250*	*16,343* *62,044*	*10,457* *62,260*	*13,303* *59,624*	325(5/12) 682
Pmax. spec.(oper.)	kW	75.4 (68)	76.5 (65)	76.6 (65)	75.6 (65)	75.6 (65)
max. power (194kW) **@190mA/2.5GeV** (12/12)	kW	**47.9**	**48.4**	**43.6**	**53.8**	
Beam V(spec/oper)	kV	27.6/25.3	26.7/24.5	27.0/25.2	27.5/26.4	27.3/26.0
Beam I (spec/oper)	A	5.62/5.44	6.21/5.45	5.9/5.98	5.93/5.98	5.85/6.0
micro-perveance		1.97	1.88	1.94	1.84	2.00
Efficiency(max.)	%	51.9	50.6	48.1	46.4	46.4

/ 2006. 5. 17.

View of Klystron (60kW vs 75kW)

Three K3773BCD klystron were replaced with YK1265 to increase the RF power from 60 to 75kW(25% up) with same power supplies.

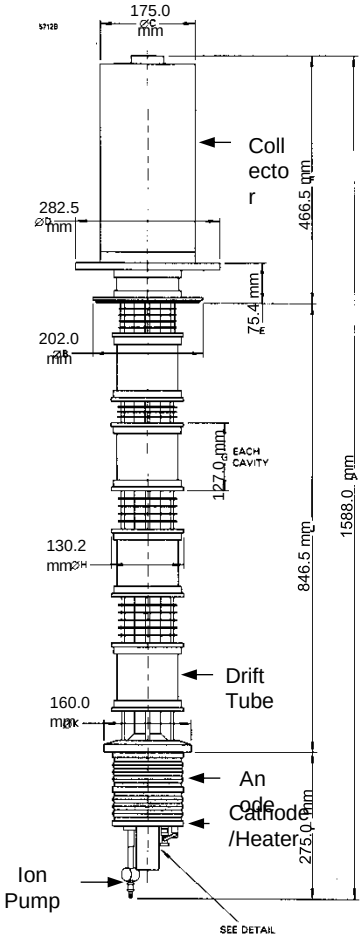

Fig1. Before replacement of 60kW (Phillips YK1265 or K3672BCD)

Fig2. After installation K3773BCD(75kW) (maker: EEV→ Marconi → e2v)

Tuning & Measurement of 75kW Klystron

K3773BCD (also YK1265 or K3672BCD) klystrons were developed for UHF Transmitters from 470 to 860MHz with same power supplies.

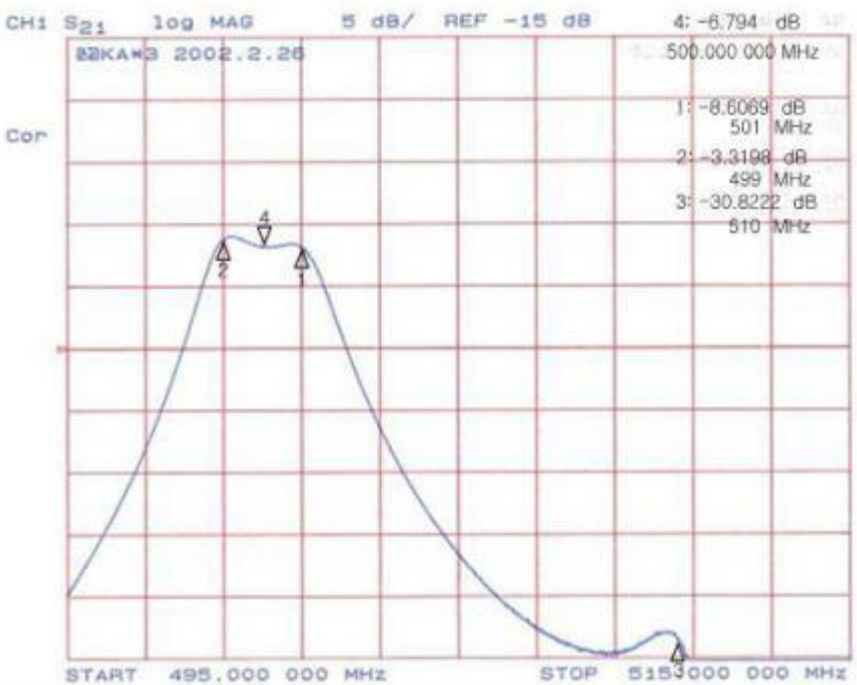

Cavity adjustment for Tuning

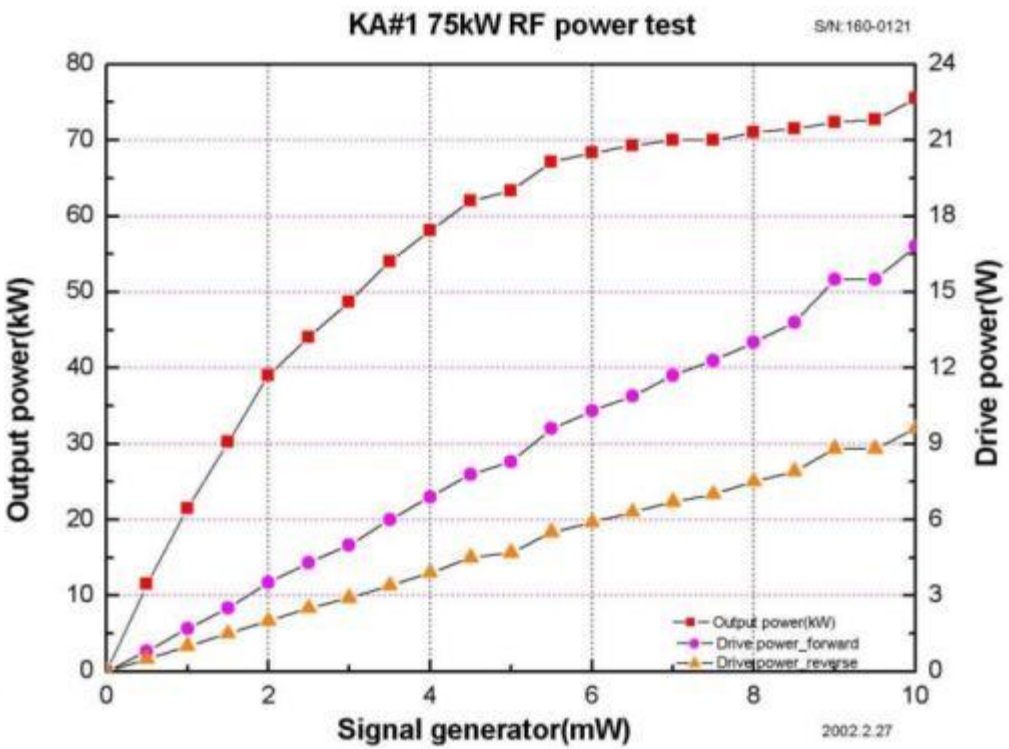

Klystron transfer characteristic curve

Upgrade Progress History of PLS

Total RF power with klystrons was upgraded from 180kW(1994) to 375kW(2005) to increase the energy and current of PLS storage ring.

Upgrade Progress & Results	**Total RF Power (maximum)**	Beam Current (max.) (operation)
First RF (1994~)	**180 kW** (60 kW x 3)	100 mA (@2.0 GeV) 200 mA (@2.0 GeV)
RF (1998~ 2001)	**240 kW** (60 kW x 4)	400 mA (@2.0 GeV) 180 mA (@2.5 GeV)
RF Power upgrade Phase 0 (2002~)	**255 kW** (60 kW x 3 + 75 kW x 1)	450 mA (@2.0 GeV) 200 mA (@2.5 GeV)
Phase I (2003. 8 -)	**270 kW** (60kW x 2 + 75kW x 2)	450 mA (@2.0 GeV) **200 mA (@2.5 GeV)**
Phase II (2004. 9-)	**300 kW** (75 kW x 4)	500 mA (@2.0 GeV) **250 mA (@2.5 GeV)**
Phase III (2005~2010)	**375 kW (75 kW x 5)**	500 mA (@2.0 GeV) 280 mA (@2.5 GeV)

23 years Experience of CW Klystrons at PAL

Klystron model (Po_max)	Operation Frequency & Application	Klystron Cavity	Cathode Voltage & Current	Operation Year (Q'ty)	**Lifetime (hours) (Faults)**	Remark
Phillips YK1265 (60 kWmax)	500MHz (3MHz) UHF TV	External Tuning (4 EA)	25kV 6A	1992 ~2001 (6 EA)	**~34,000 (emission decreased)**	original version For UHF TV (for PLS)
EEV K3672BCD (60 kWmax)	500MHz (3MHz) UHF TV	External Tuning (4 EA)	25kV 6A	1997 ~2003 (2 EA)	**~1,400 (drift tube Broken)**	Second version from YK1265 (for PLS)
EEV K3773BCD (75 kWmax)	500MHz (3MHz) UHF TV	External Tuning (4 EA)	27kV 7A	2003 ~2012 (5 EA)	**>30,000 (emission & to PLS-II)**	RF power upgraded (for PLS)
Thales TH2161B (310 kWmax)	500MHz (2MHz) Accelerator	**Internal cavity (5 EA)**	50kV 11A	2011 ~2014 (4 EA)	**~10,000 (operating) >50,000 (expect)**	**for CESR-B SC cavity (PLS-II)**

K3773BCD (also YK1265 or K3672BCD) klystrons were developed for UHF TV Transmitters, and used for RF sources for Accelerator application at Elettra and PLS.

Therefore, ~30,000 hours lifetime was shorter than CW klystrons for Accelerators

PLS 12 years Operation Statistics (1/2)

PLS operation availability and MTBT was gradually increased to 98% and 75 hours (3.1 days). Also energy and current were increased from 2GeV/100mA to 2.5GeV/200mA during 16 years period.

As of 2009

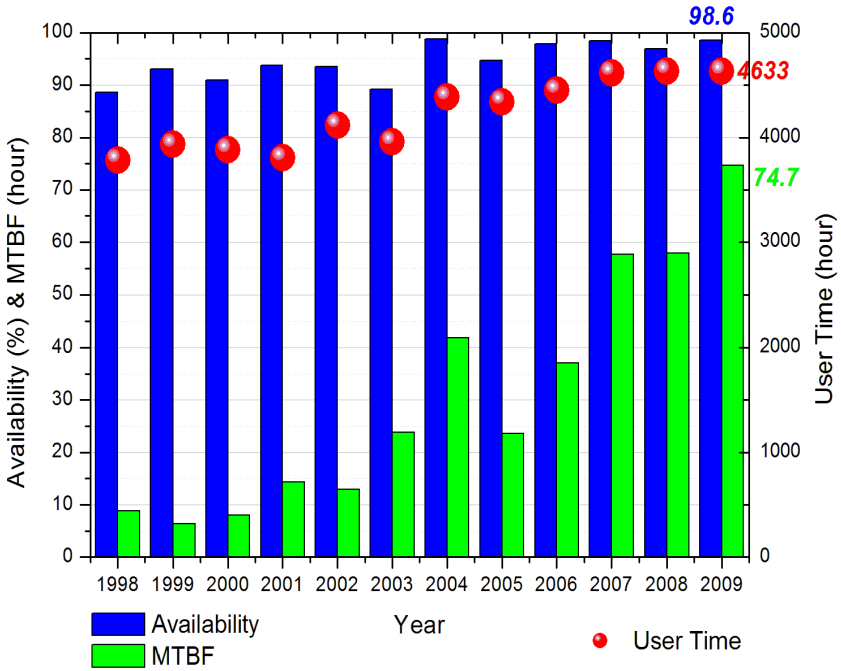

As of Sep. 17 , 2010

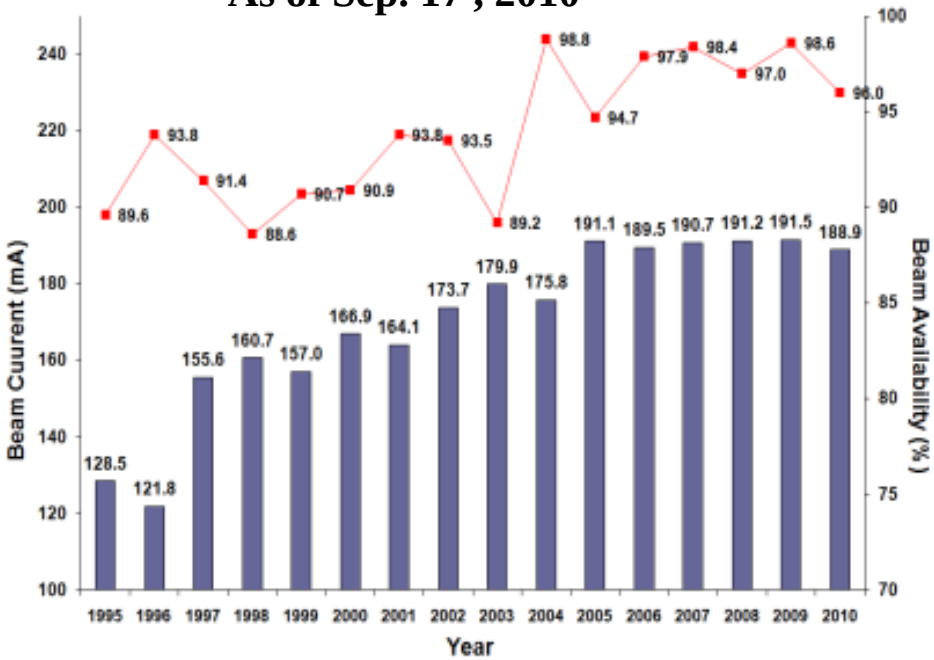

PLS 12 years Operation Statistics (2/2)

Year	Assigned Time	User time	Availability	Total Down Time	No. of Faults	Total beam Integral	MTBF	MTTR	Beam Energy
1996	3236	3034	93.8	202		387.0			2
1997	3960	3618	91.4	342		500.2			2
1998	4272	3784	88.6	488	428	545.2	8.8	1.1	2
1999	4224	3934	93.1	290	617	548.7	6.4	0.5	2-2.5
2000	4272	3884	90.9	388	484	593.2	8.0	0.8	2.5
2001	4056	3806	93.8	250	266	626.5	14.3	0.9	2.5
2002	4404	4119	93.5	285	319	706.4	12.9	0.9	2.5
2003	4440	3959	89.2	481	166	703.0	23.8	2.9	2.5
2004	4440	4386	98.8	54	105	730.6	41.8	0.5	2.5
2005	4584	4341	94.7	243	184	804.0	23.6	1.3	2.5
2006	4545	4450	97.9	95	120	812.9	37.1	0.8	2.5
2007	4694	4617	98.4	77	80	840.8	57.7	1.0	2.5
2008	4781	4635	96.9	146	80	857.1	57.9	1.8	2.5
2009	4700	4633	98.6	67	62	854.5	74.7	1.1	2.5
2010	3420.5	3283	96.0	137.5	71	497.3	46.2	1.9	2.5

As of Sep. 17, 2010

PLS Faults Breakdown of PLS SR (~2010)

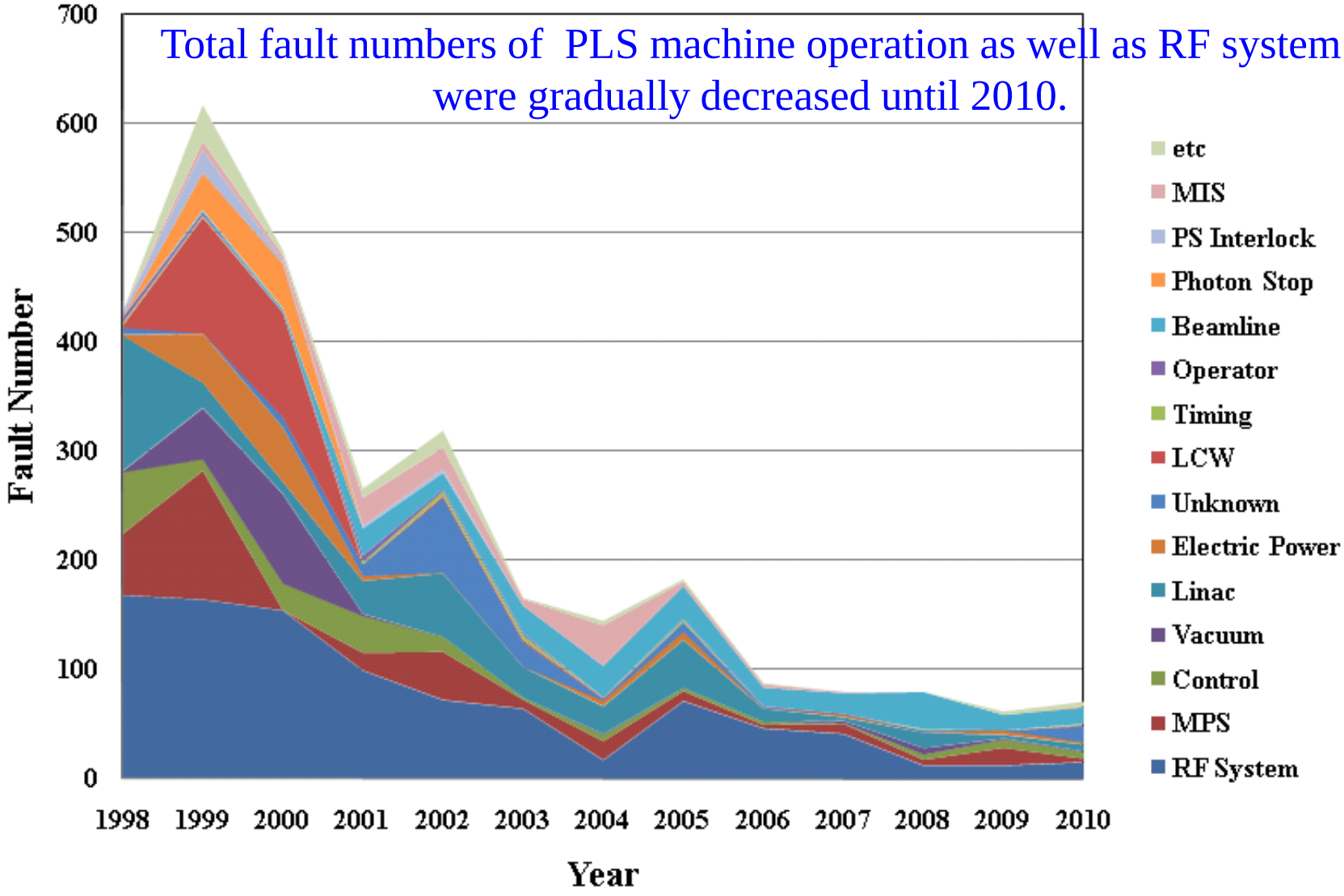

100kW/165MHz RF Amplifier for RFQ (KBSI project)

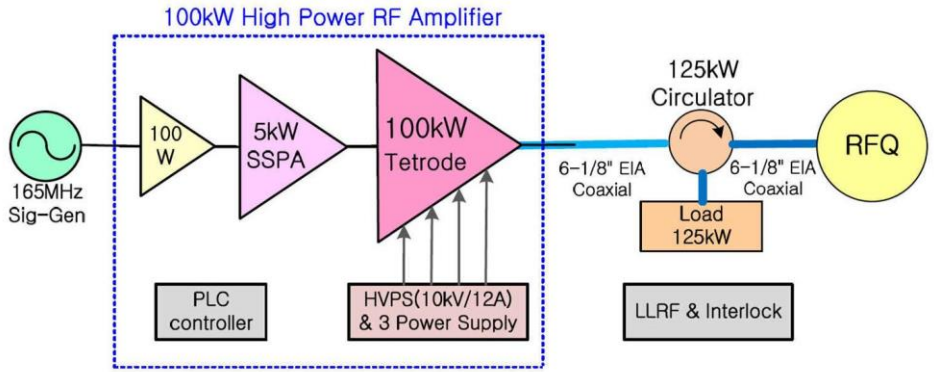

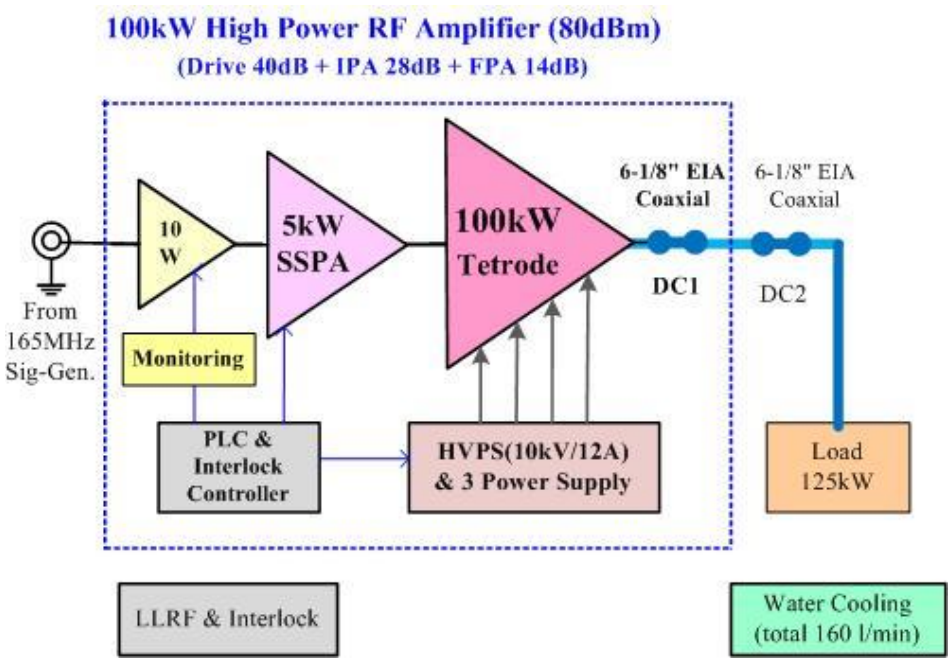

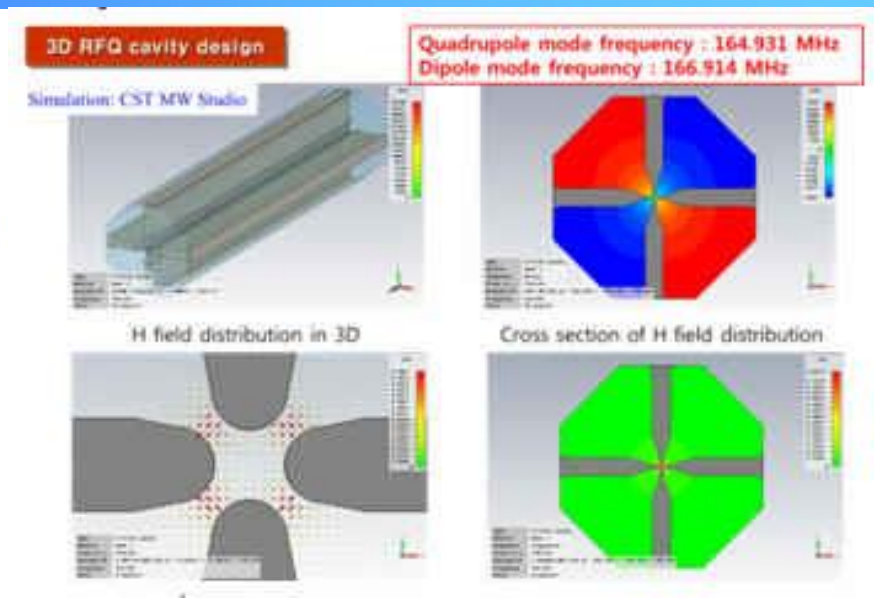

- Total length : 250 cm or less
- Cross-sectional area :
  50x50 cm^2 or less
- **Power : 100 kW or more, CW**
- **Frequency : 165.0 MHz**
- Duty cycle : 20% or more
- RF peak : 150 kW or less
- Coupling loop connector : standard EIA 6.125“
- RF signal pickup probes
- Mains Power requirement : 3phase, 380V, 60Hz

TH 781 for 100kW/165MHz RF Amplifier (KBSI project)

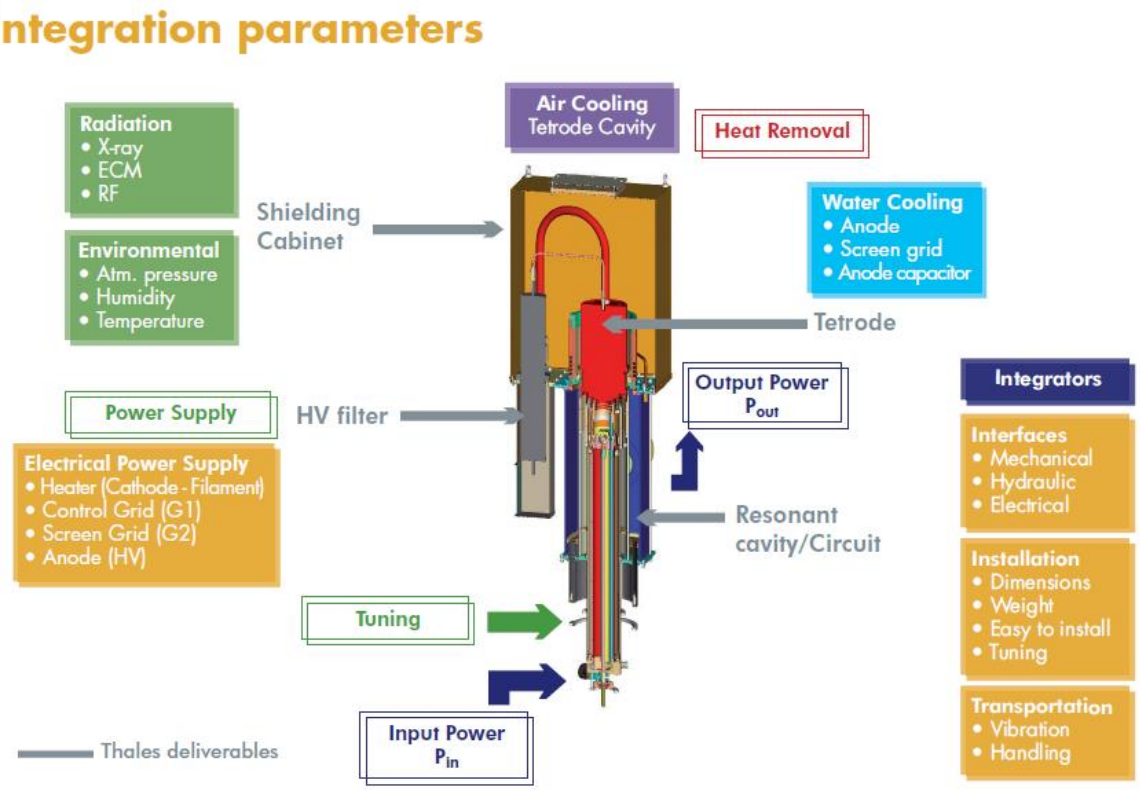

1) Anode Power Supply: 10kV/15A(min.) DC, controlled
2) Screen Grid P/S : 1200V/0.7A(min.) DC, SMPS type
3) Control Grid P/S : -350V/0.9A(min.) DC, SMPS type
4) Filament Power Supply: 10V/375A(max.) AC, controlled

TH 781 High power Tetrode

Up to 300kW CW (~200MHz)

Up to 500kW pulses (~250MHz)

High gain: >14dB

Summary

1. **Present PAL site & brief history of PLS & PLS-II are introduced.**
2. **PLS-II project is introduced, and operating at 200~250mA/3.0GeV.**
3. **PAL-XFEL project as the 4th generation light source is introduced.**
4. **Parameters of PLS-II RF system are showed with some tables.**
5. **Similar SR HPRF systems for Light Sources are compared at table.** More close collaborations are needed with experts group such as klystron, IOT and SSPA or cavities; NC vs SC.
6. **Cryomodule and Cryogenic status of PLS-II were introduced .**
7. **Block diagram PLS-II LLRF system is showed and controlled within +/- 0.1% amplitude , +/- 0.1degree phase stabilities.**
8. **Faults Status of SR with SRF System are analyzed and decreasing.**
9. **60~75kW klystron amplifier and upgrade progress are presented.**
10. **60~75kW klystrons and progress for PLS are introduced.**
11. **23 years experience of klystrons (60, 75, 300kW) at PAL was analyzed.** 3 type of UHF klystrons–Philips YK1265, EEV3672, Marconi K3773- were operated at PLS RF system.
12. **PLS operation experience are introduced, and fault statics was analyzed.**
13. **100kW/165MHz RF Amplifier for RFQ (as a KBSI project) is introduced**

Thank you for your attention!

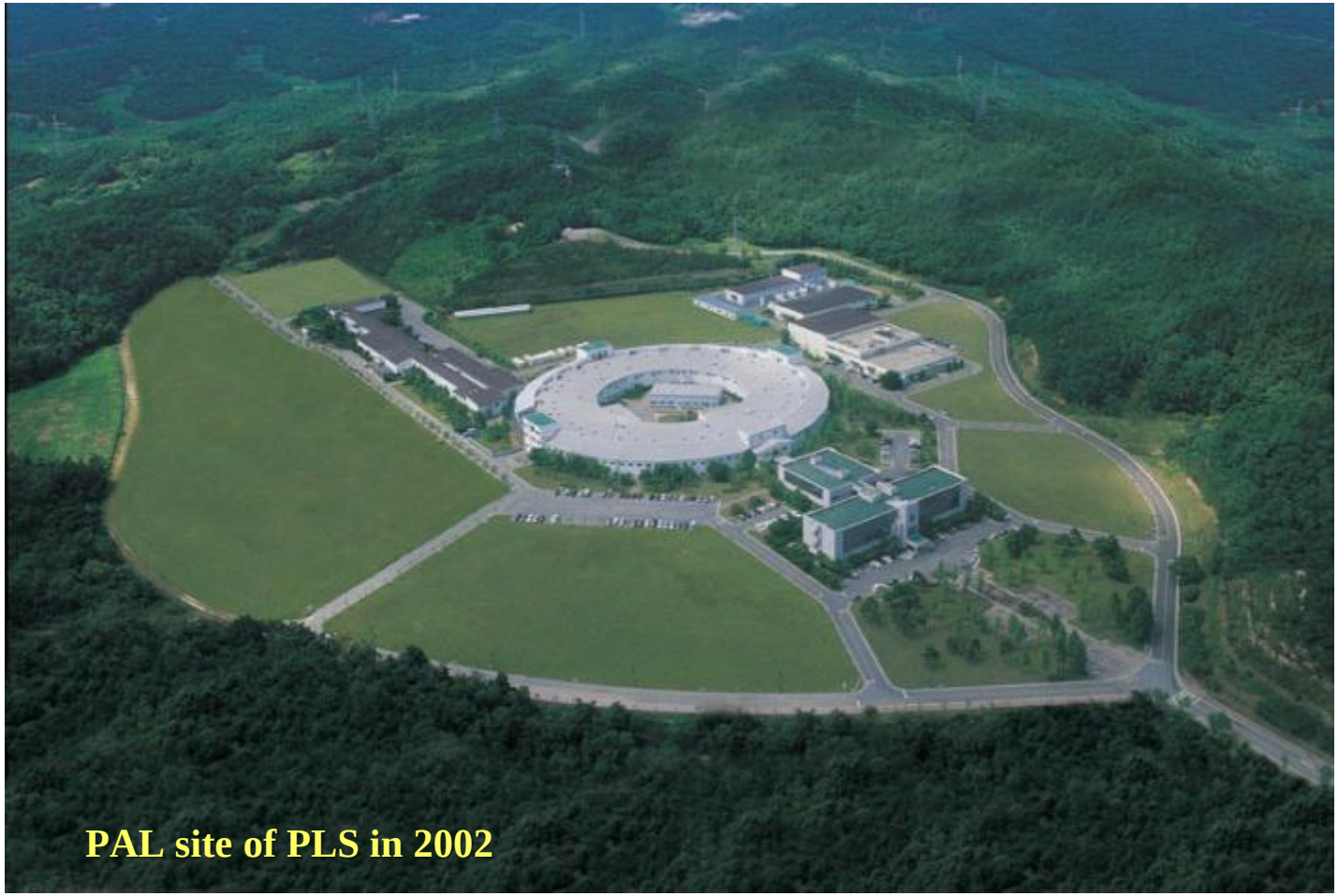

Please do not hesitate to contact me
if you have any queries and collaboration!

mhchun@postech.ac.kr