Development of a RF Power Coupler for the Rare Isotope Science Project (RISP) RFQ Prototype

Woo-Kyung Han, Bong-Hyuk Choi, and Jaeeun Han

Institute for Basic Science, Daejeon 305-811, South Korea

Abstract

RAON, heavy ion accelerator for rare isotope science, is under development for the Rare Isotope Science Project (RISP) at Institute for Basic Science in South Korea. Radio-Frequency Quadrupole (RFQ), a component of RAON, accelerates heavy ion beams from 10 keV/u up to 500 keV/u at the current of 12 pμA and the frequency of 81.25 MHz. For RISP RFQ prototype, a 15kW CW RF power coupler has been designed using 3D electromagnetic, mechanical computer simulation codes. Here, the test results of the fabricated RF power coupler are presented.

Vacuum Window

CST Simulation

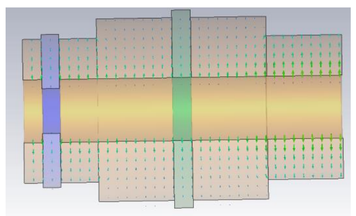

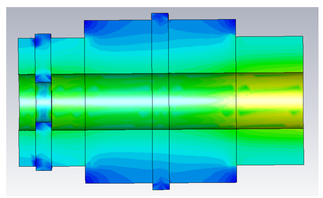

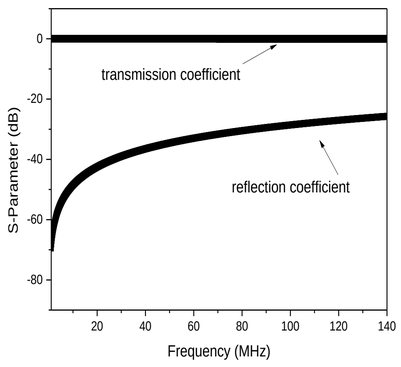

Test

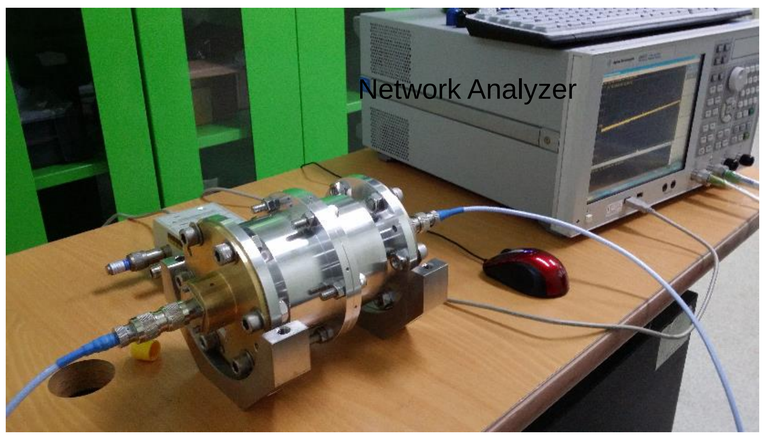

S21[dB]	S11[dB]	VSWR
−0.0056	−37.9	1.02

- The reflection coefficient for the fabricated ceramic part is -37.9 dB which agrees well with the CST computer simulation results.

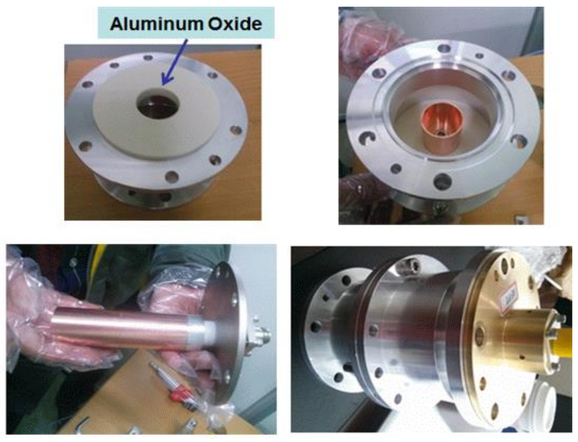

EM & Mechanical Analysis

EM Simulation

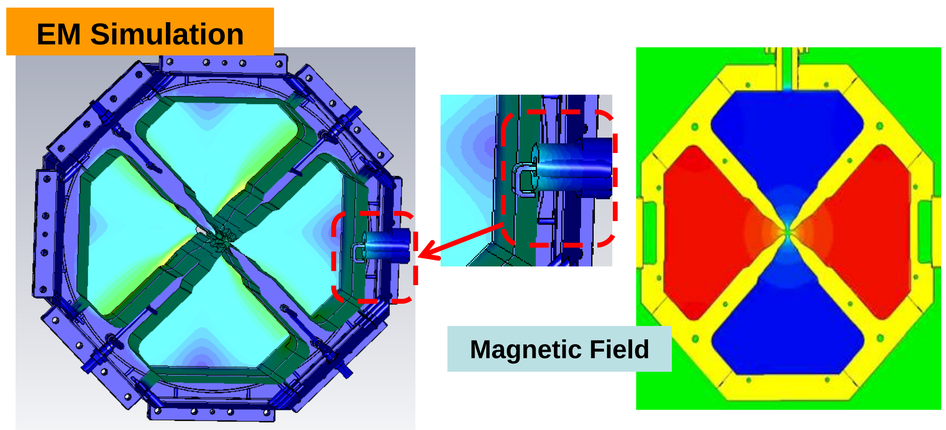

rotation	MHz	VSWR
0	80.93	1.09
22.5	77.68	0.15
45	81.23	0.50
67.5	77.75	0.80
90	80.93	1.09

Inventor Modeling

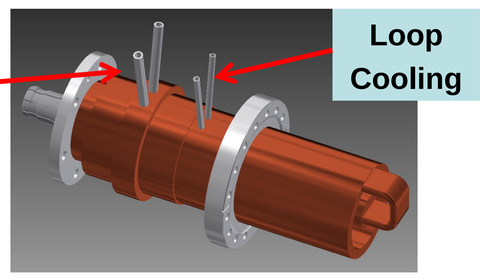

Thermal Simulation

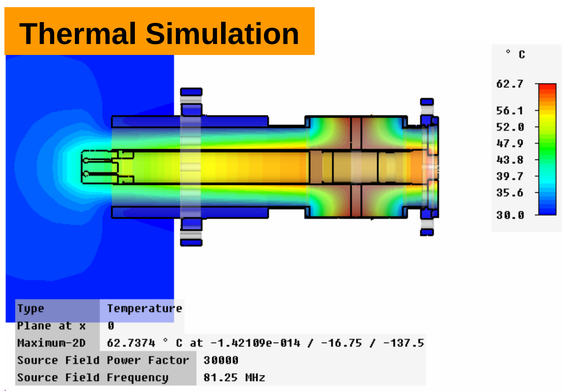

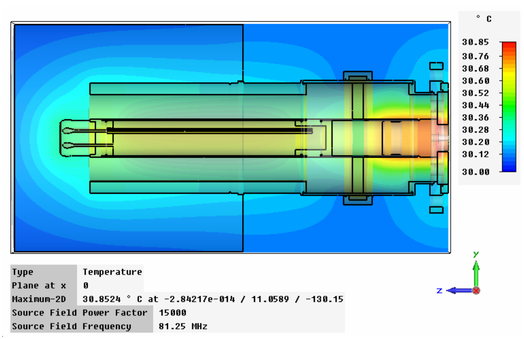

Fabrication

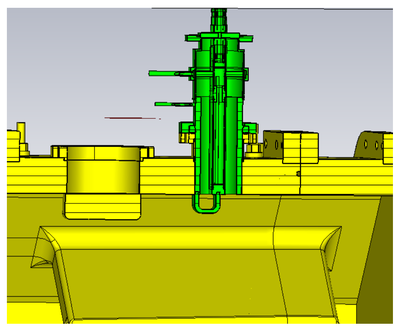

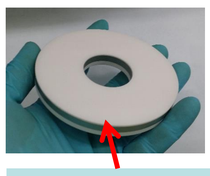

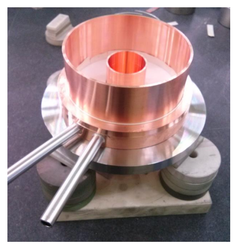

Metalized Ceramic

Brazing

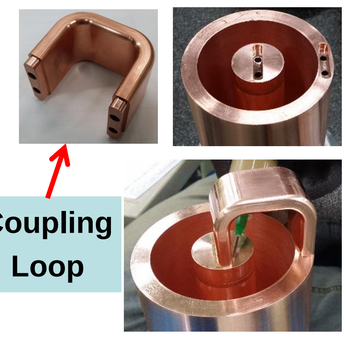

Coupling Loop

Water Cooling Pipe

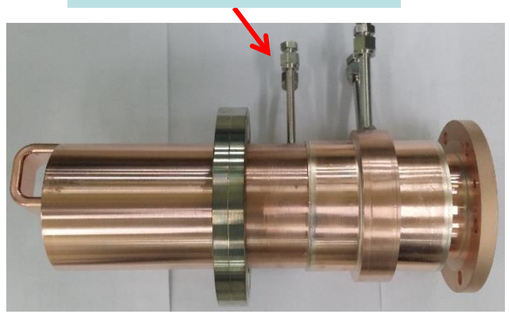

3D Measurement

Leak Test

He Leak Test

Water Pressure Test

3 bar during 10 minutes

RF Test

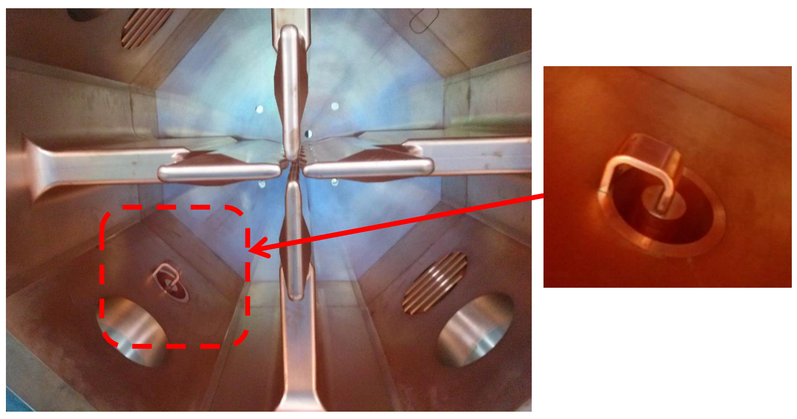

- Because the RFQ cavity design is changed after fabricating a power coupler, the experiment with RF power source does not be performed.
- The coupling loop has been changing and fabricating for the new designed RFQ prototype.

- For reference, the reflection coefficient is measured at the new version RFQ prototype with the old version power coupler which is -12 dB at the frequency of 81.1 MHz.

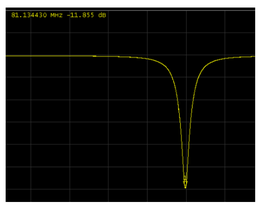

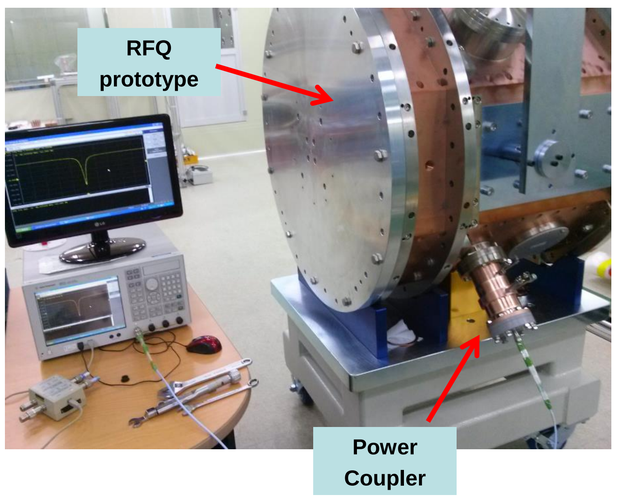

Summary

1. The design of the coaxial-type power coupler for the 81.25 MHz RFQ prototype is performed.
2. The reflection coefficient for the fabricated ceramic part is -37.9 dB which agrees well with the CST computer simulation results.
3. The whole power coupler is fabricated and the leak tests are carried out.
4. Due to the change of the RFQ prototype cavity, the coupling loop has been changing and fabricating.

Institute for Basic Science

Wookyung Han (wkhan@ibs.re.kr)