20 years of high average Fundamental Power Coupler designs at CERN

CWRF workshop 2014, Trieste

Eric Montesinos, CERN-RF, on behalf of many colleagues

Outline

History

Ceramic families

Test boxes

Lifetime

Next steps

Conclusion

History
(From design to spares)

Design from scratch
4-8 years

Modification of existing
3-5 years

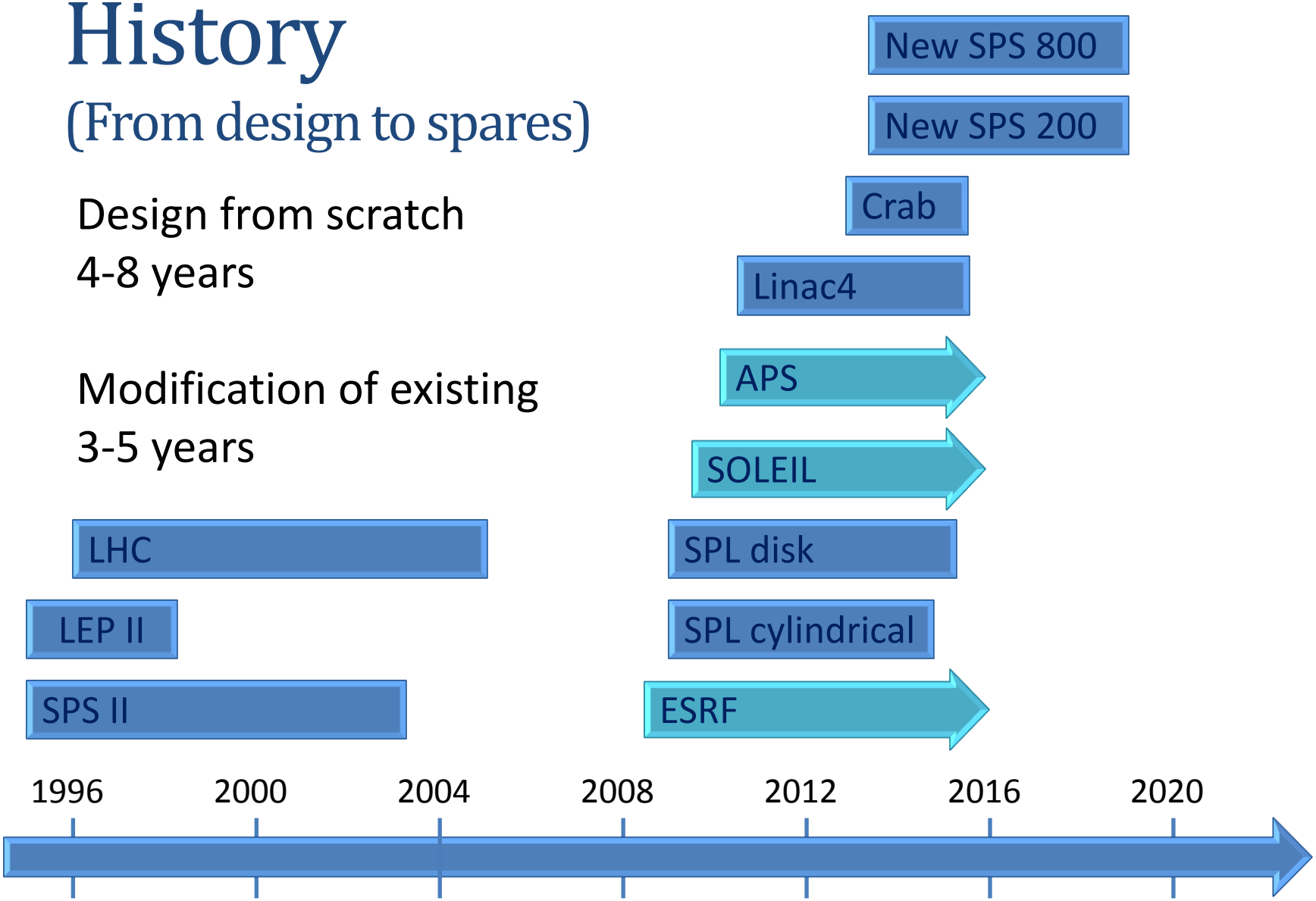

Frequency operation &Power

Coupler	Frequency [MHz]	Operation	TW [kW]	SW all phases [kW]
SPS II	200	CW	500	
LEP II	352	CW	375	500
LHC	400	CW	550	575
ESRF-SOLEIL-APS	352	CW	300	
SPL cylindrical	704	2 ms - 50 Hz	1000	600
SPL disk	704	2 ms - 50 Hz	1000	1000
Linac 4	352	2 ms - 1 Hz		1000
Under design				
Crab	400	CW	100	100
LIU SPS 200	200	CW	500	500
LIU SPS 800	800	CW	150	150
RFQ	750	20 µs - 200 Hz	100	100

Ceramic families

Cylindrical windows
- SPS I 200 MHz (1975-2000)
- LEP I + LEP II
- LHC variable
- ESRF-APS-SOLEIL
- SPL cylindrical

Coaxial Disk windows
- SPS II 200 MHz (2000-…)
- SPS Power loads
- SPL disk
- Crab cavities

Disk windows
- SPS 800 MHz & Medical RFQ
- Linac4

Whatever their shapes, all our ceramics are specified regarding the same Technical Specification since 1996, 'RF Windows for the LHC': http://cds.cern.ch/record/91419?ln=fr

They are all Al2O3 minimum 99.5 % purity, with MoMn metallization with Ni diffused to a depth of between 5 – 10 µm

Whatever the coupler and frequency, vacuum side is Titanium sputtered and at CERN we only have TiOx sputtering

Cylindrical windows

What has been improved ?

Brazing

- 2 mm copper collars instead of 0.5 mm kovar collars
- Less losses & better cooling

Electron Beam Welding

- More precise
- Perfect electrical continuity (no need of RF contacts)

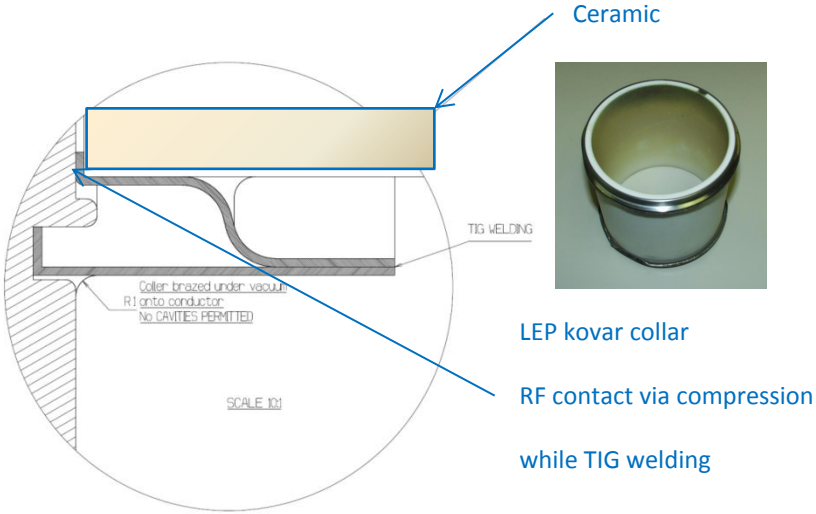

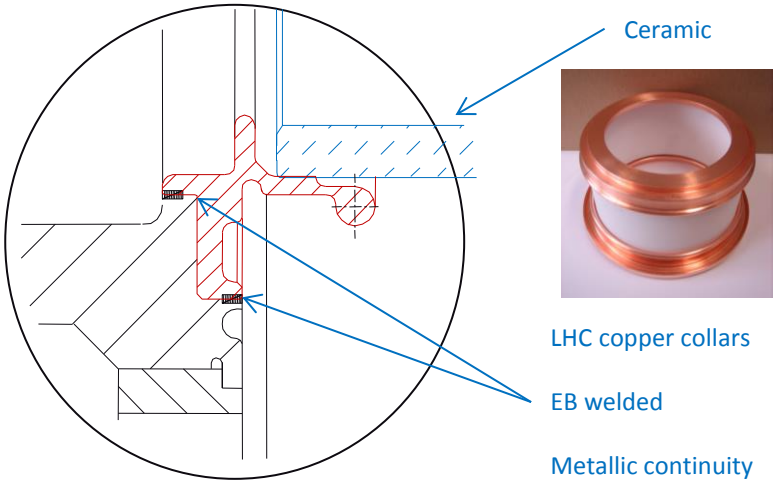

Cylindrical windows

What has been improved ?

Brazing

- 2 mm copper collars instead of 0.5 mm kovar collars
- Less losses & better cooling

Electron Beam Welding

- More precise
- Perfect electrical continuity (no need of RF contacts)

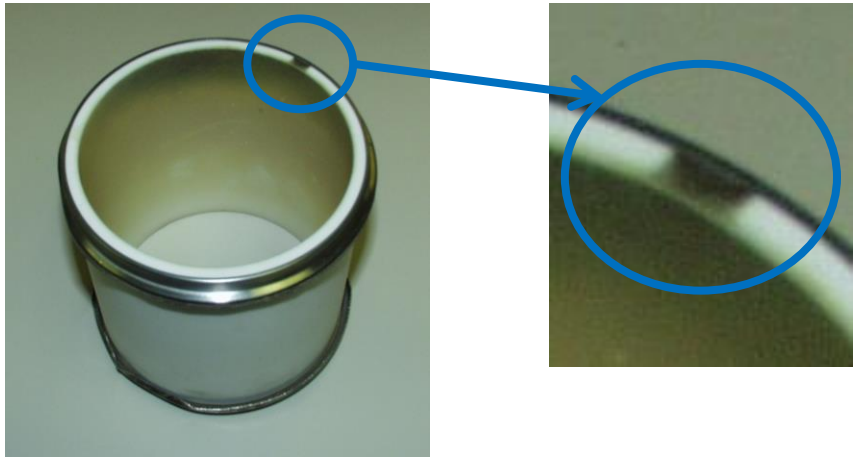

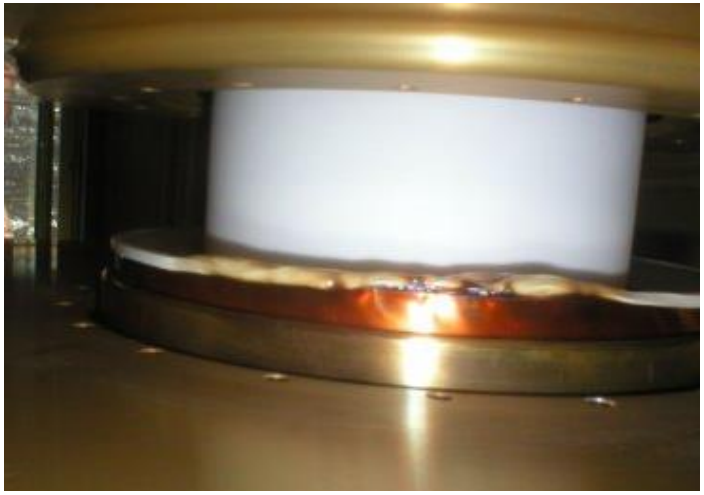

Cylindrical windows

Distance between rings limits the peak power due to surface flashover rating

As these ceramics are part of the matching system, it is not so easy to calculate the RF peak power limit

We work on two axis

- ‘protection’ to improve peak voltage capability
- Air flow to remove ionized air

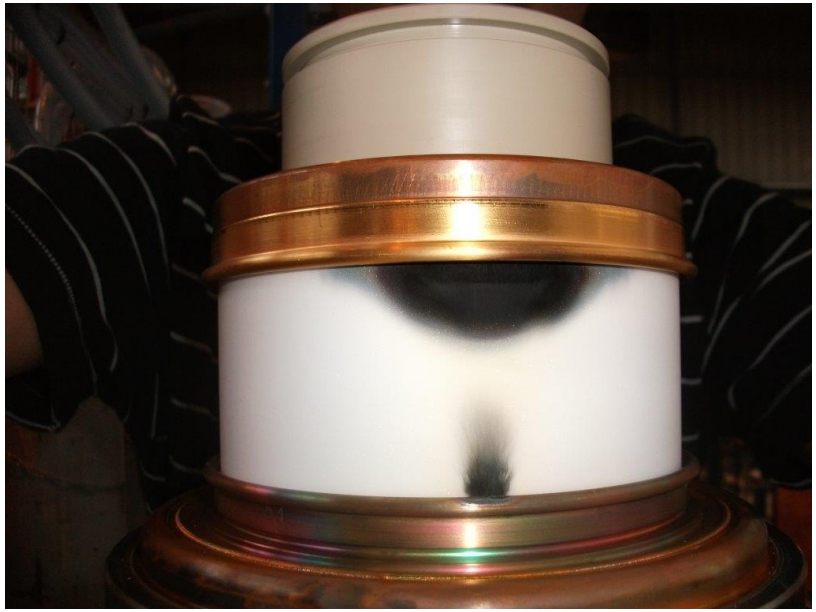

SPL couplers
TW 1000 kW were ok
SW 600 kW were arcing

Cylindrical windows

Distance between rings limits the peak power due to surface flashover rating

As these ceramics are part of the matching system, it is not so easy to calculate the RF peak power limit

We work on two axis

- ‘protection’ to improve peak voltage capability
- Air flow to remove ionized air

Arcing with 44 kVDC applied between copper collars

Cylindrical windows

Distance between rings limits the peak power due to surface flashover rating

As these ceramics are part of the matching system, it is not so easy to calculate the RF peak power limit

We work on two axis

- ‘protection’ to improve peak voltage capability
- Air flow to remove ionized air

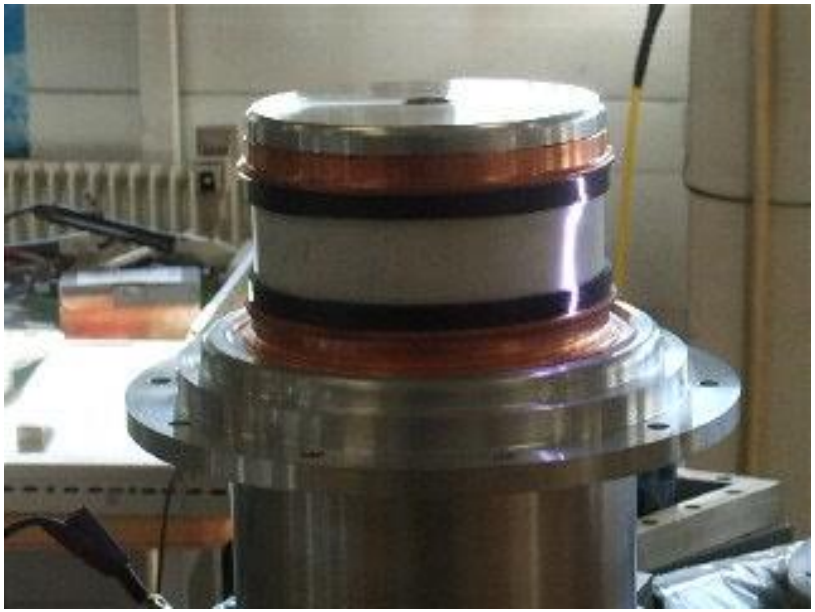

Arcing with 72 kVDC
applied between copper collars
with two ‘plastic protection’ added

Cylindrical windows

Distance between rings limits the peak power due to surface flashover rating

As these ceramics are part of the matching system, it is not so easy to calculate the RF peak power limit

We work on two axis

- ‘protection’ to improve peak voltage capability
- Air flow to remove ionized air

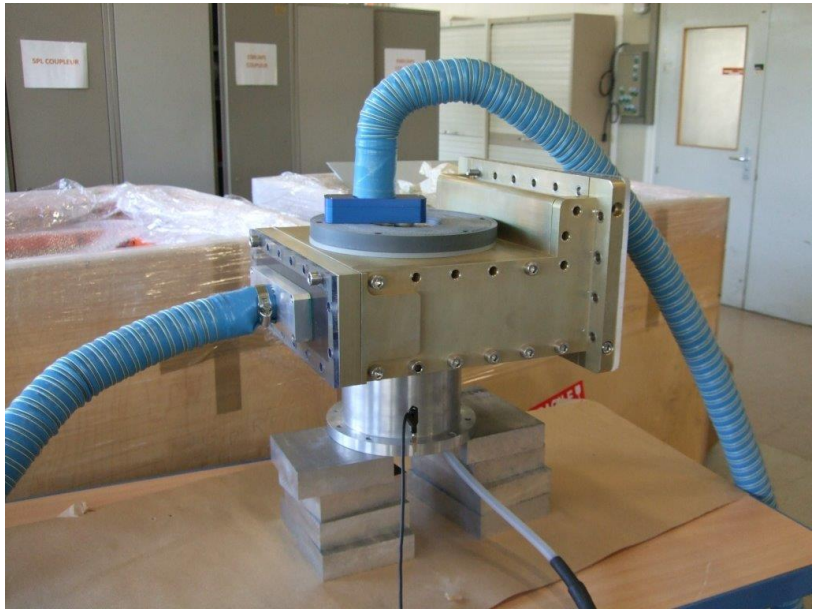

SPL couplers
Air cooling study to improve HV-DC flashing limits

Coaxial disk windows

What has been improved ?

Brazing

Inner tube sandwich (Copper / Molybdenum / Copper) replaced by plain Copper tube

Titanium sputtering

easier as the assembly is quite small

Electron Beam Welding

Allow to assemble complex shapes close to the ceramic assembly after Titanium sputtering

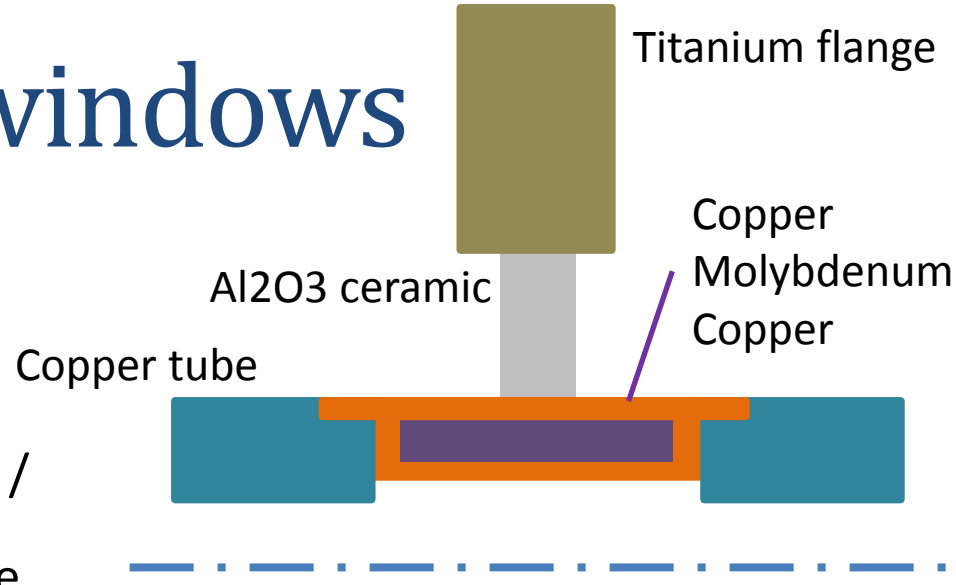

Coaxial disk windows

What has been improved ?

Brazing

Inner tube sandwich (Copper / Molybdenum / Copper) replaced by plain Copper tube

Titanium sputtering

easier as the assembly is quite small

Electron Beam Welding

Allow to assemble complex shapes close to the ceramic assembly after Titanium sputtering

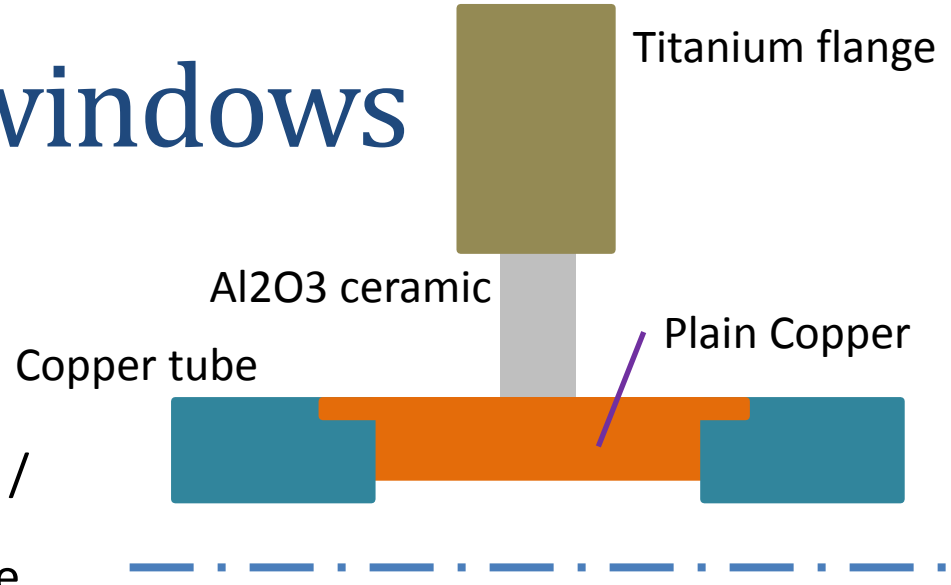

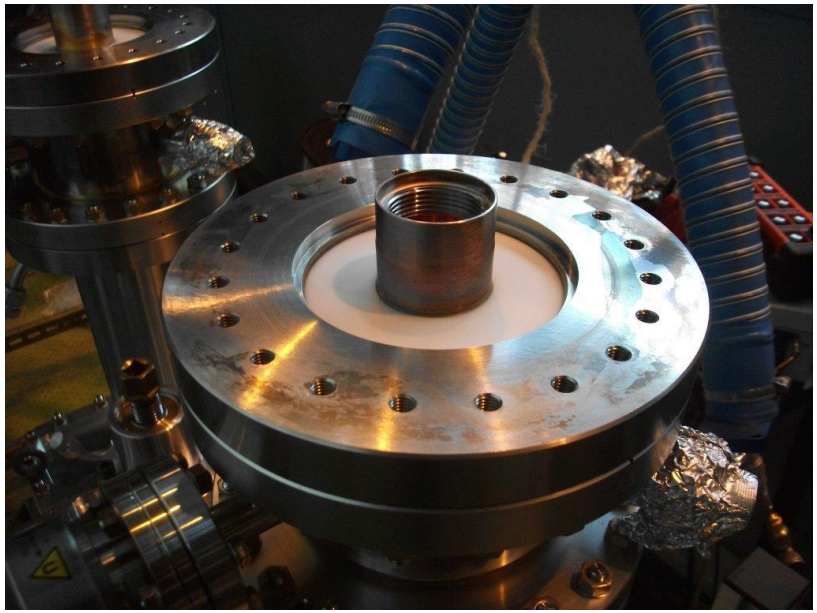

Coaxial disk windows

Distance between inner and outer is also a limiting factor

Again when ceramics are part of the matching system, it is not so easy to calculate the RF peak power limit

Be careful to include any disturbance in the simulation (air exhaust for example)

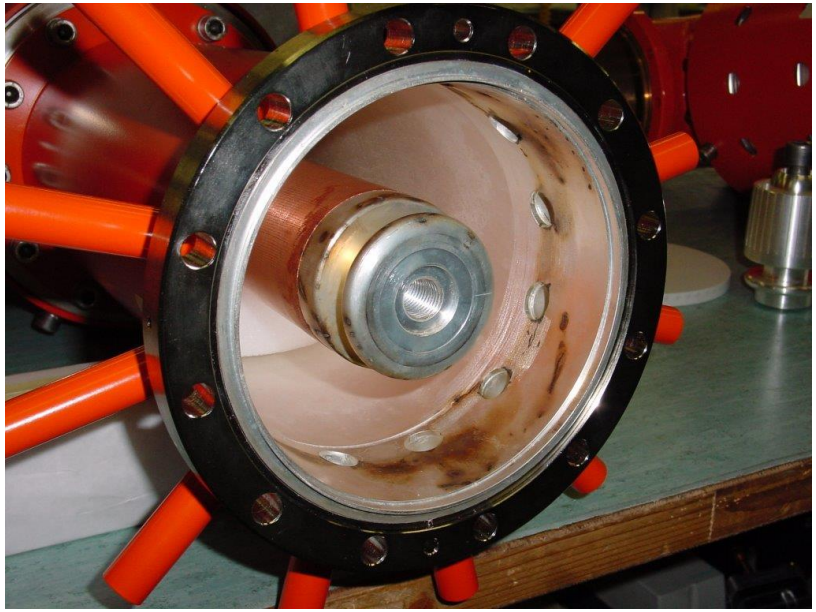

SPS couplers 1998 design phase
Arcing at 500 kW SW ? (800 kW TW ok)
due to sharp edges at the air exhausts

Coaxial disk windows

Distance between inner and outer is also a limiting factor

Again when ceramics are part of the matching system, it is not so easy to calculate the RF peak power limit

Be careful to include any disturbance in the simulation (air exhaust for example)

SPS couplers
Arcing at 500 kW SW ? (800 kW TW ok)
due to sharp edges at the air exhausts

Disk windows

What has been improved ?

Brazing

A so large diameter copper ring (2) around a so large and massive ceramic (1)

Electron Beam Welding

Very precise, energy well mastered, close to the ceramic

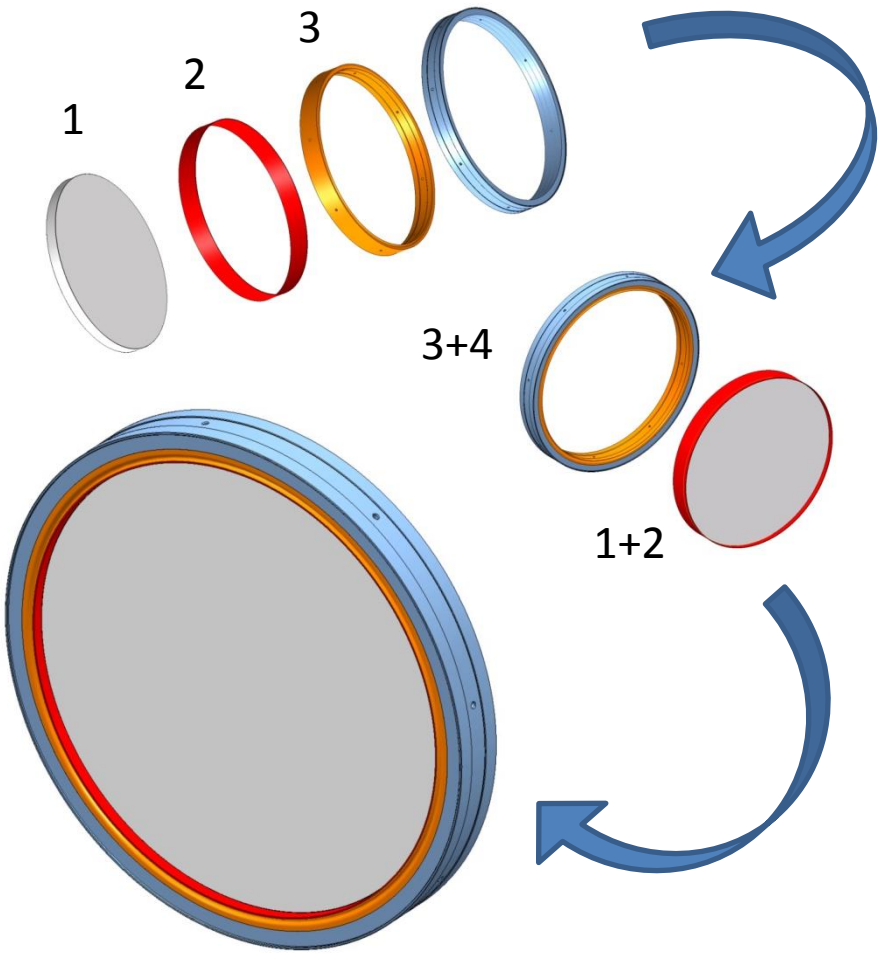

1 : 12 kg ceramic Ø 400 mm x 25 mm
2 : Copper tube
Ø 400 mm x 1.25 mm x 45 mm
3 : Outer copper ring
4 : Stainless steel ring for Helicoflex

Disk windows

Even if probably the most powerful designs, they are also the less easy to integrate into a cryomodule

Condemned to be associated with warm cavities

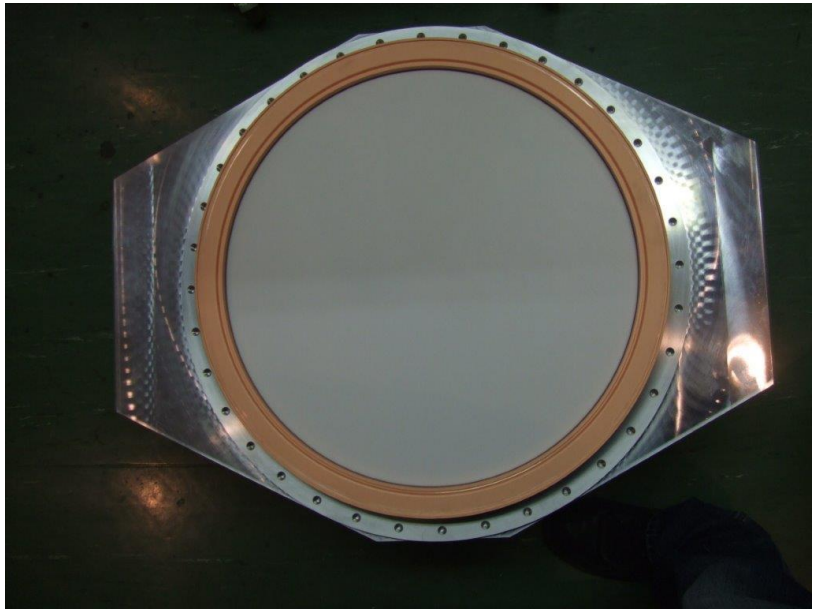

Linac 4 window
12 kg ceramic Ø 400 mm x 25 mm
Stainless Steel flanges
600 mm x 300 mm

Brazing

This has probably be the most important improvement over the last years

We are now able to braze thick tube of Copper around and inside a ceramic

This allows higher average power levels

During the 90's, CERN subcontracted all FPC window brazing

Some companies were qualified, but they gave up as the market is too confidential

We now have a team of specialists involved from the first day in the design of our windows

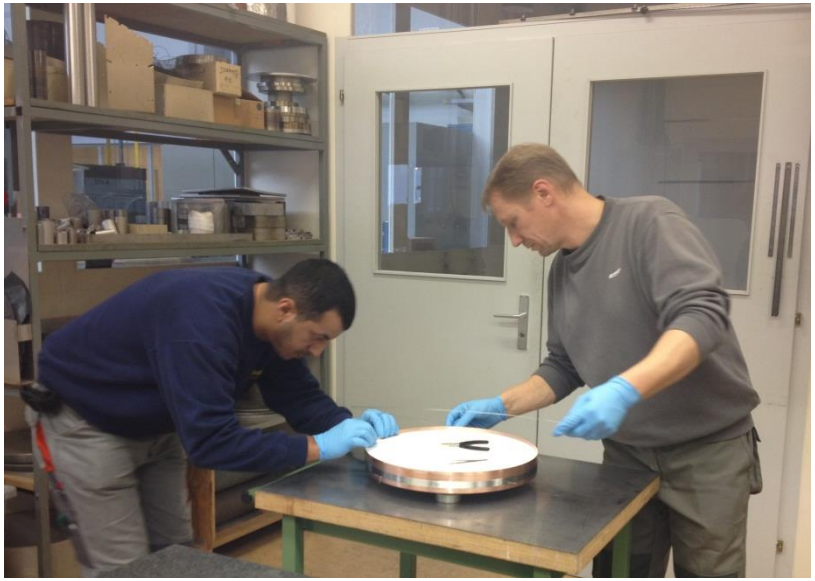

Large devices under preparation before brazing

Electron Beam Welding

This has been another very important improvement over the last years

We are now able to Electron Beam Weld very large device with a remarkable precision

In addition to the brazing, this is a key improvement

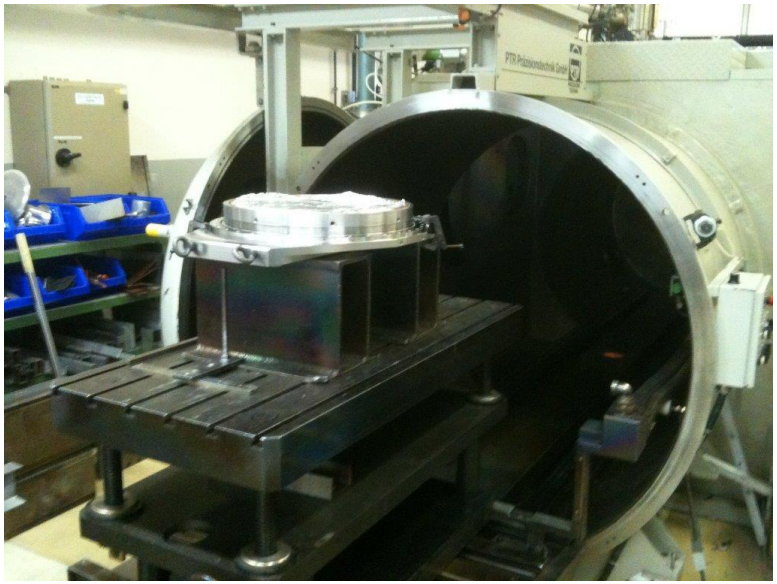

Large devices EBW at CERN
Here the Linac4 window
600 mm x 400 mm x 60 mm
Copper/Copper EBW

Test boxes

Should be thought from the very beginning of the project

This is a kind of ‘transmission line’, no field but full transfer from a coupler to another

Whatever the new coupler at CERN, we now think it as a clean room assembly

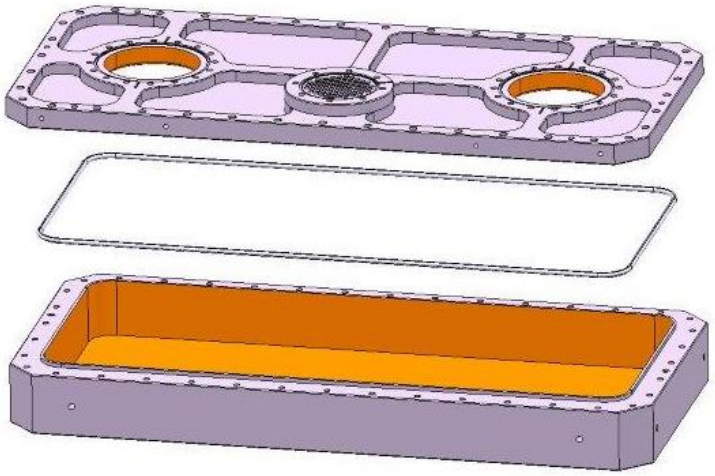

Test boxes

Should be thought from the very beginning of the project

This is a kind of ‘transmission line’, no field but full transfer from a coupler to another

Whatever the new coupler at CERN, we now think it as a clean room assembly

Test boxes

In order to reduce conditioning process, we also think it in order to be able to bake it with couplers assembled onto it

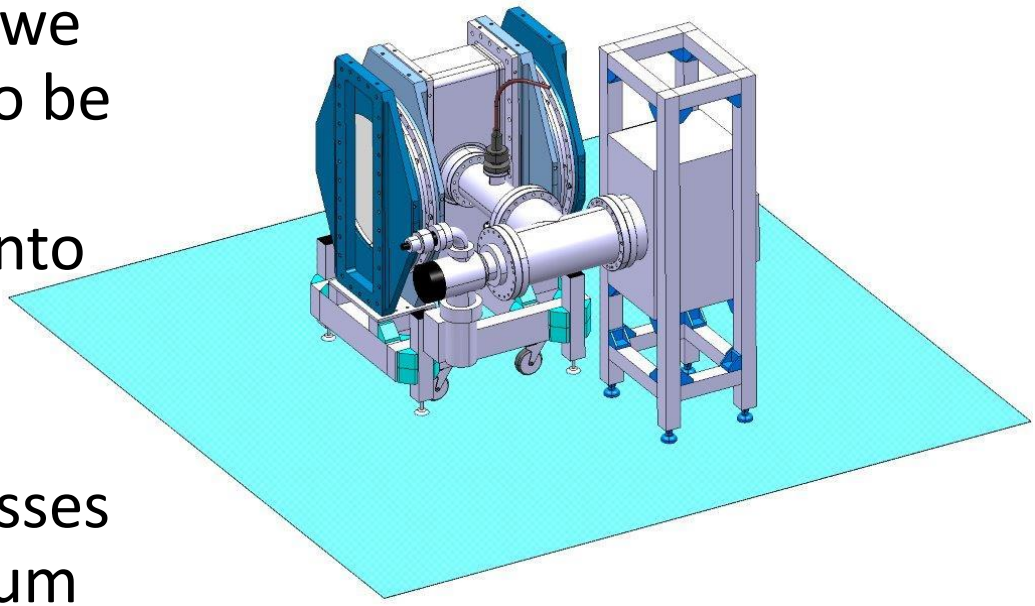

As conditioning processes are quite long, minimum two benches are mandatory

Test boxes

In order to reduce conditioning process, we also think it in order to be able to bake it whit couplers assembled onto it

As conditioning processes are quite long, minimum two benches are mandatory

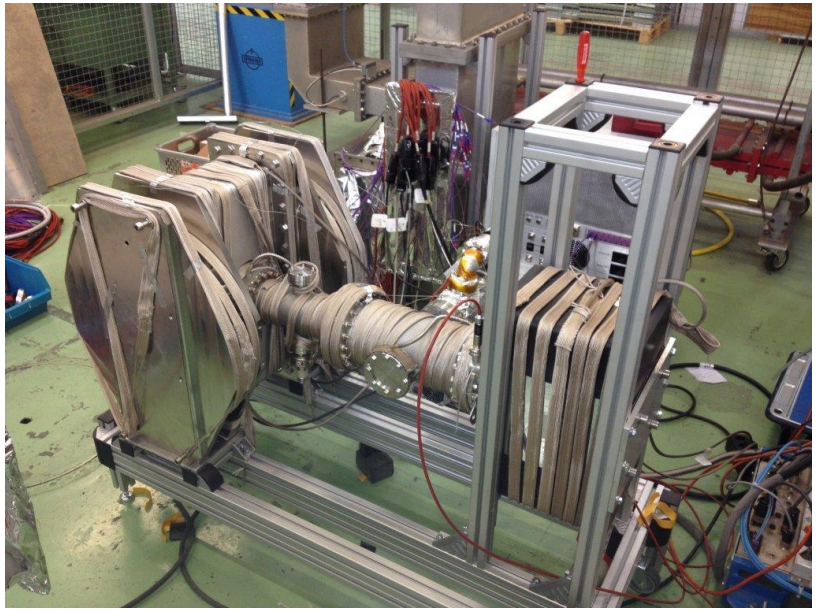

Test boxes

In order to reduce conditioning process, we also think it in order to be able to bake it whit couplers assembled onto it

As conditioning processes are quite long, minimum two benches are mandatory

Test boxes

In order to reduce conditioning process, we also think it in order to be able to bake it whit couplers assembled onto it

As conditioning processes are quite long, minimum two benches are mandatory

Amplifiers

The power we are often talking about requests that amplifiers are available for conditioning

During the test phase, having an amplifier able to deliver full power is a must for the designer

We are currently working on resonant ring that we could use to the MW level with a 100 kW amplifier 'only' (more to say about it in two years…)

Amplifiers

The power we are often talking about requests that amplifiers are available for conditioning

During the test phase, having an amplifier able to deliver full power is a must for the designer

We are currently working on resonant ring that we could use to the MW level with a 100 kW amplifier 'only' (more to say about it in two years…)

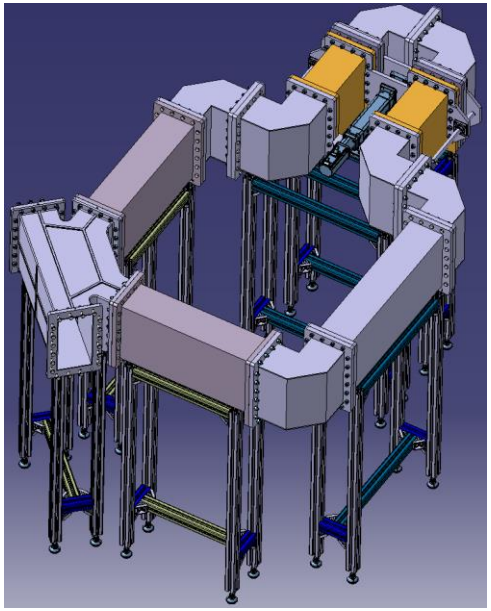

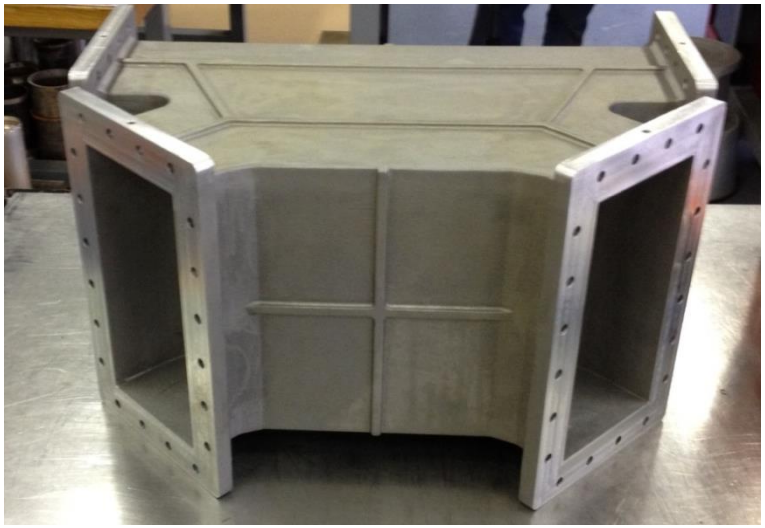

Lifetime

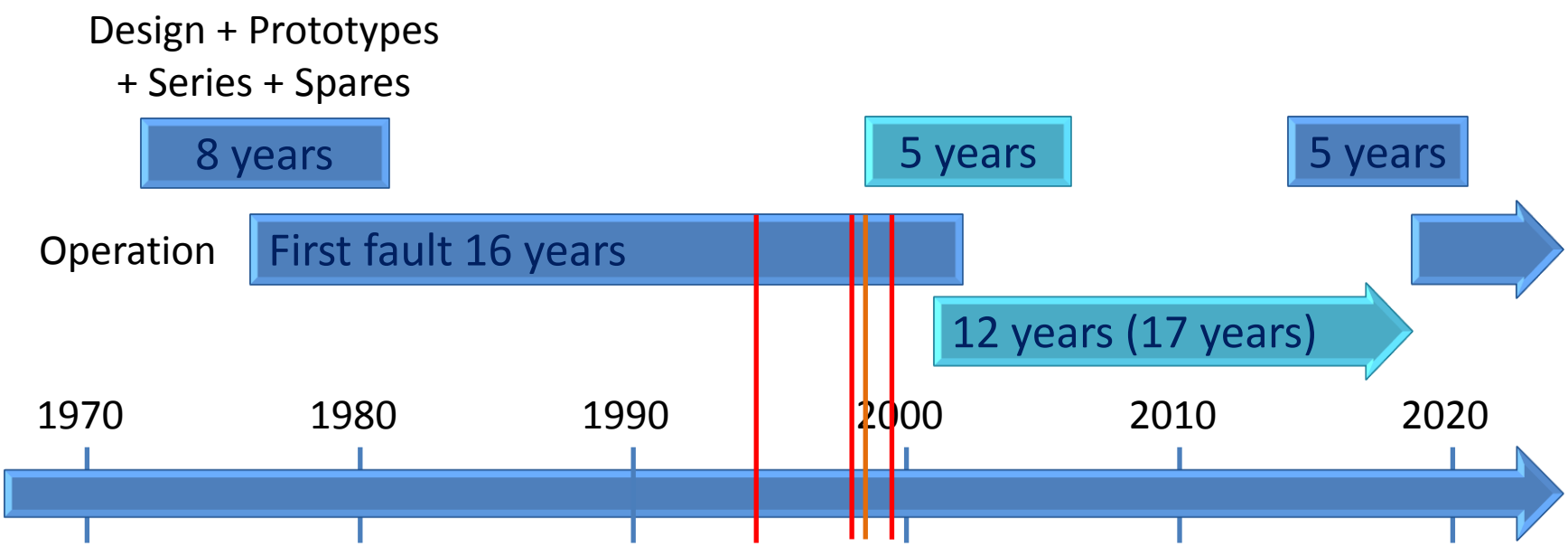

SPS 200 MHz example

- First design 8 years (design to spares)
- FPC lifetime 15 to 20 years
- One off the shelves spare was not ok
- Better to have few spares and launch a new design, with new functionalities than to build many spares

Next steps

We have launched two R&D programs

Ideal conditioning process, safe and swift

Construction process requiring NO conditioning

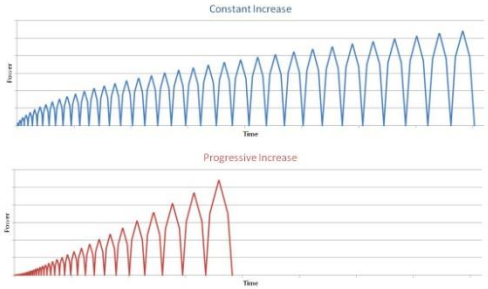

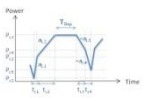

$$E_i = \int_0^T P_{i,t}\,dt = P_{i,1}t_{i,1} + \frac{a_{i,1}}{2}t_{i,1}^2 + P_{i,2}t_{i,2} + \frac{a_{i,2}}{2}t_{i,2}^2 + P_{i,3}T_{Step} + P_{i,3}t_{i,3} - \frac{a_{i,3}}{2}t_{i,3}^2 + P_{i,4}t_{i,4} - \frac{a_{i,4}}{2}t_{i,4}^2$$

$$E_{Total} = \sum_1^N E_i = \sum_1^N \left(P_{i,1}t_{i,1} + \frac{a_{i,1}}{2}t_{i,1}^2 + P_{i,2}t_{i,2} + \frac{a_{i,2}}{2}t_{i,2}^2 + P_{i,3}T_{Step} + P_{i,3}t_{i,3} - \frac{a_{i,3}}{2}t_{i,3}^2 + P_{i,4}t_{i,4} - \frac{a_{i,4}}{2}t_{i,4}^2\right)$$

Case		Return to Zero	Return to Intermediate Power
Single Slope	Constant Coefficient Case 1	$T_{Total} = N \times T_{Step} + \left(\frac{1}{a}+\frac{1}{b}\right)\sum_1^N P_{i,3}$	$T_{Total} = N \times T_{Step} + \left(\frac{1}{a}+\frac{1}{b}\right)\sum_1^N P_{i,3} - \left(\frac{1}{a}+\frac{1}{b}\right)\sum_1^N P_{i,5} + \frac{P_{N,5}}{a}$
	Constant Time Case 2	$T_{Total} = N(T_{Step} + t_a + t_b)$	$T_{Total} = N(T_{Step} + t_a + t_b) - \sum_1^N \left(\frac{P_{i-1,5}}{P_{i,3}}t_a + \frac{P_{i,5}}{P_{i,3}}t_b\right)$
Double Slope	Constant Coefficient Case 3	$T_{Total} = N \times T_{Step} + 2\left(\frac{k}{b}+\frac{1-k}{a}\right)\sum_1^N P_{i,3} + 2k\left(\frac{1}{a}-\frac{1}{b}\right)P_N$	$T_{Total} = N \times T_{Step} + 2\left(\frac{k}{b}+\frac{1-k}{a}\right)\sum_1^N P_{i,3} + 2k\left(\frac{1}{a}-\frac{1}{b}\right)P_N - \frac{2}{b}\sum_1^N P_{i,5} + \frac{P_{N,5}}{b}$
	Constant Time Case 4	$T_{Total} = N(T_{Step} + 2t_a + 2t_b)$	$T_{Total} = N(T_{Step} + 2t_a + 2t_b) - \sum_1^N \left(\frac{P_{i,5} - P_{i-1,5}}{P_{i,2} - P_{i-1,5}}t_b\right)$
Mixed Slope	Constant Coefficient Case 5	$T_{Total} = N \times T_{Step} + \left(\frac{1+k}{b}+\frac{1-k}{a}\right)\sum_1^N P_{i,3} + k\left(\frac{1}{a}-\frac{1}{b}\right)P_{N,3}$	$T_{Total} = N \times T_{Step} + \left(\frac{1+k}{b}+\frac{1-k}{a}\right)\sum_1^N P_{i,3} + k\left(\frac{1}{a}-\frac{1}{b}\right)P_{N,3} - \frac{2}{b}\sum_1^N P_{i,5} + \frac{P_{N,5}}{b}$
	Constant Time Case 6	$T_{Total} = N(T_{Step} + t_a + t_b + t_c)$	$T_{Total} = N(T_{Step} + t_a + t_b + t_c) - \sum_1^N \left(\frac{P_{i-1,5}}{P_{i,2}}t_b + \frac{P_{i,5}}{P_{i,3}}t_c\right)$

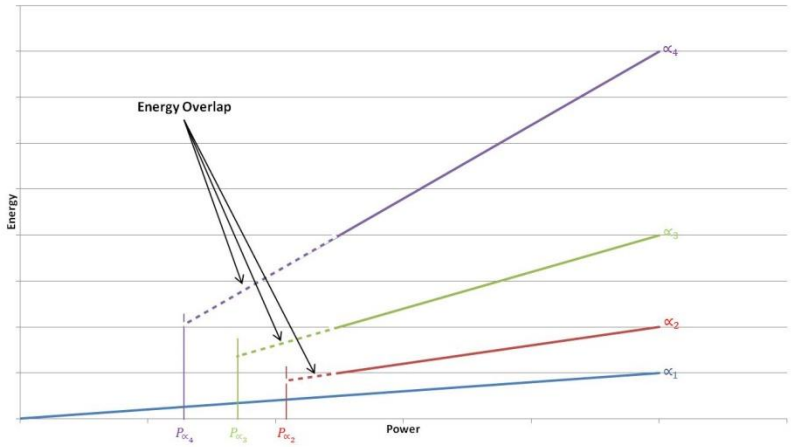

Conclusion

Main improvements over last 20 years have been

- Brazing of massive Copper tubes to ceramic allowing higher average power levels
- Electron Beam Welding

Test boxes (or test cavities) must be included in the project from the very beginning, they cost money and resources

A test place to full power available close to the 'Designers' is a must

A clean room facility available is a clear advantage

Conclusion

Be careful of the lifetime of Fundamental Power Couplers !

Start the next design as soon as possible (as you complete one)

As always, the Devil is in details, that is particularly true with Fundamental Power Couplers, so do not forget to keep a careful eye on everything !

This is only a brief summary of some important outcomes regarding couplers, so please, would you have any question, do not hesitate to contact me: eric.montesinos@cern.ch

Thank you for your attention

Thanks to Sergey Belomestnykh who visited me last December (with Alexander Zaltsman) and asked me, can you please ‘send me information on RF window fabrication at CERN’

We are preparing sets of drawings that we will make available upon request