Bunch-by-bunch Feedback System for Hybrid Filling and Recent Topics in SPring-8

T. Nakamura, K. Kobayashi,
M. Masaki, T. Fujita, H. Dewa, T. Asaka,
S. Sasaki, H. Ohkuma
JASRI / SPring-8

URL: http://acc-web.spring8.or.jp/~nakamura
mail: nakamura@spring8.or.jp

TWIICE 2014, 2013-01-17

SPring-8 Storage Ring

Energy	:	8 GeV
Revolution Period	:	4.79 μs (C = 1436m)
RF frequency	:	508.6 MHz
Average Current	:	100 mA

Transverse Feedback For Hybrid Filling

High Bunch Current Singlet + Thin Bunch Train

Longitudinal Feedback

New Type Energy Kicker (High Shunt Impedance/m)

Simple Driving Circuits (No QPSK modulation)

Collective Effects

Burst CSR by Microwave Instability

2ns 50kV Bucket-by-Bucket Injection/Extraction Kicker

for **off**-axis injection for 2mm dynamic aperture

for **on**-axis injection/extraction for narrower aperture

Wide (infinite) Horizontal Physical Aperture

Hybrid Filling with High Current Singlet Bunch(es)

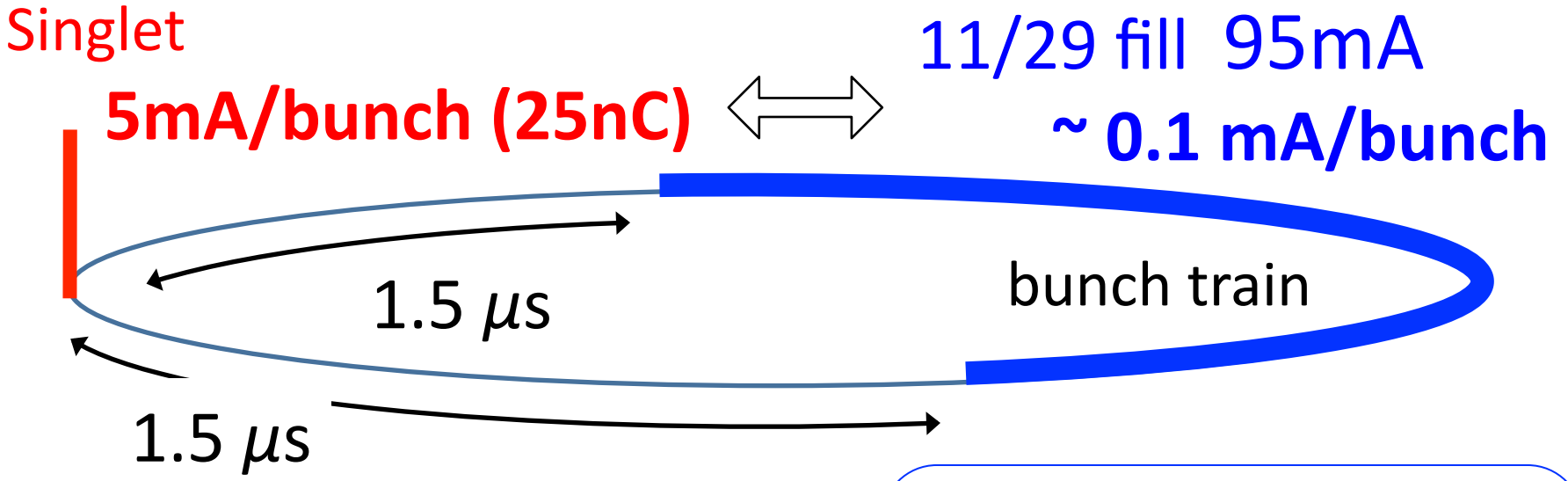

Single-bunch Instability

Mode-coupling (H, V)

Broad-band geometrical impedance

+ Resistive-wall In-Vacuum IDs

Multi-bunch Instabilities

Cavity HOM (H)

Resistive-wall (H, V)

In-Vacuum IDs

Transverse Bunch-by-bunch Feedback System

Feedback System for Hybrid Filling

* 5mA/bunch (singlet) ⇔ 0.1 mA/bunch (train)

System saturates with large BPM signal of 5mA/bunch

* Bunch Current Sensitive Attenuator for BPM signal

  http://accelconf.web.cern.ch/accelconf/icalepcs2009/papers/thb006.pdf

* Extra Vertical Feedback Loop for Singlet(s) (> 3mA/bunch)

  Independent tuning : FIR filter, gain, kick width

* Suppression of Single-bunch instability

SPring-8 Bunch-by-bunch Feedback Processor (2003,2004 ~)

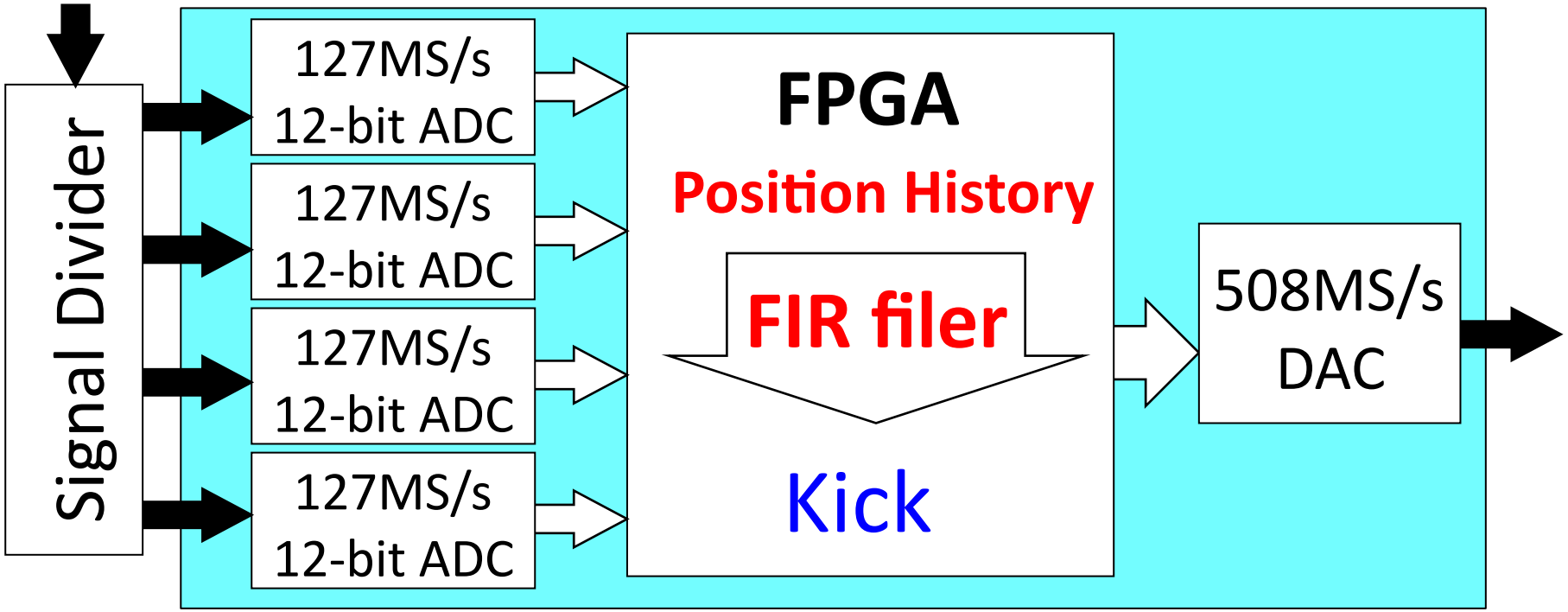

127MS/s x 4 = 508MS/s

Installed/Tested Light sources and Hardon rings

* SOLEIL,SSRF, KEK-PF,TLS,HLS,PLS,PLS-II,New SUBARU,Aichi Synchrotron

* 10ns/2ns **Part-by-Part Feedback** for Long Bunch/Coasting Beam

KEK-PS (Proton long bunch, for head-tail),

S-LSR (Proton coasting beam)

(for detail, visit http://acc-web.spring8.or.jp/~nakamura)

FIR filter to produce Phase Shift

Position and Kick : -90deg at kicker

Number of Taps

FIR filter

$$y_n = \sum_{k=1}^{N} a_k x_{n-k}$$

Kick

Bunch Position turn-by-turn History

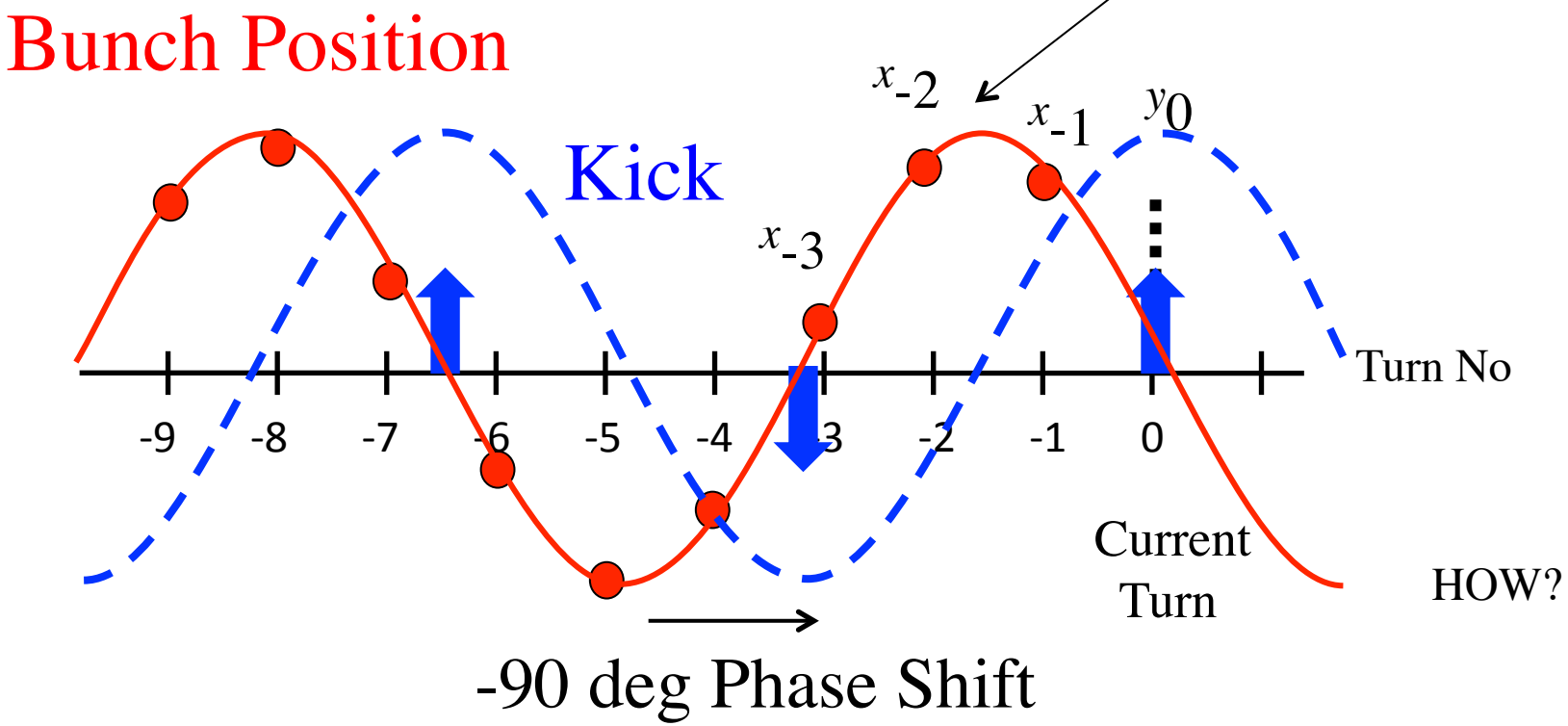

Bunch Current Sensitive Attenuator for BPM signal

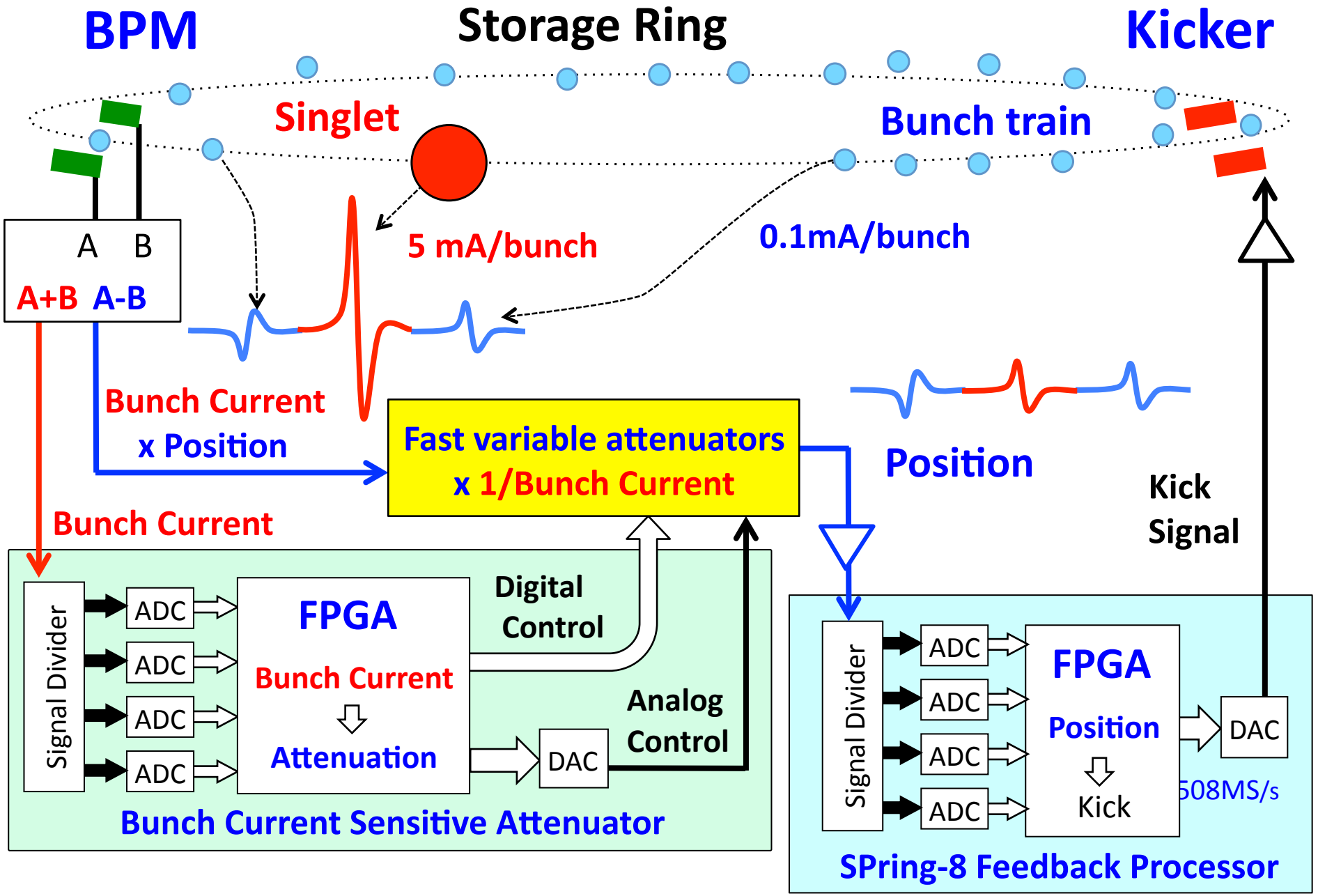

Feedback for Vertical at Bunch current > 3mA/bunch

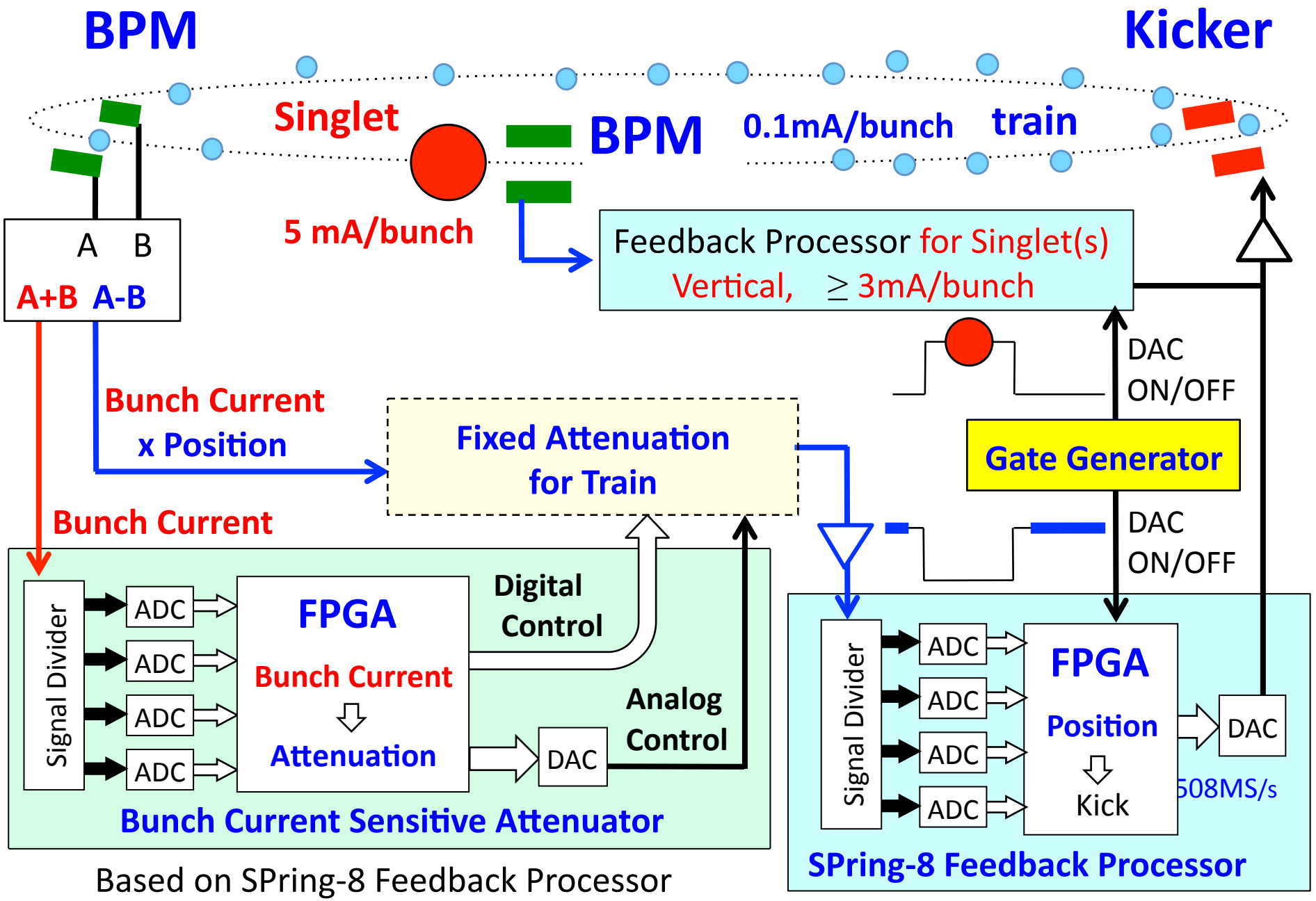

Based on SPring-8 Feedback Processor

Instability Strength Monitoring

$$G \propto \sum \frac{(\text{ID Length})_i \left\langle \beta_{y,i} \right\rangle}{(\text{ID gap})_i^{\,3}}$$ for all In-vacuum IDs

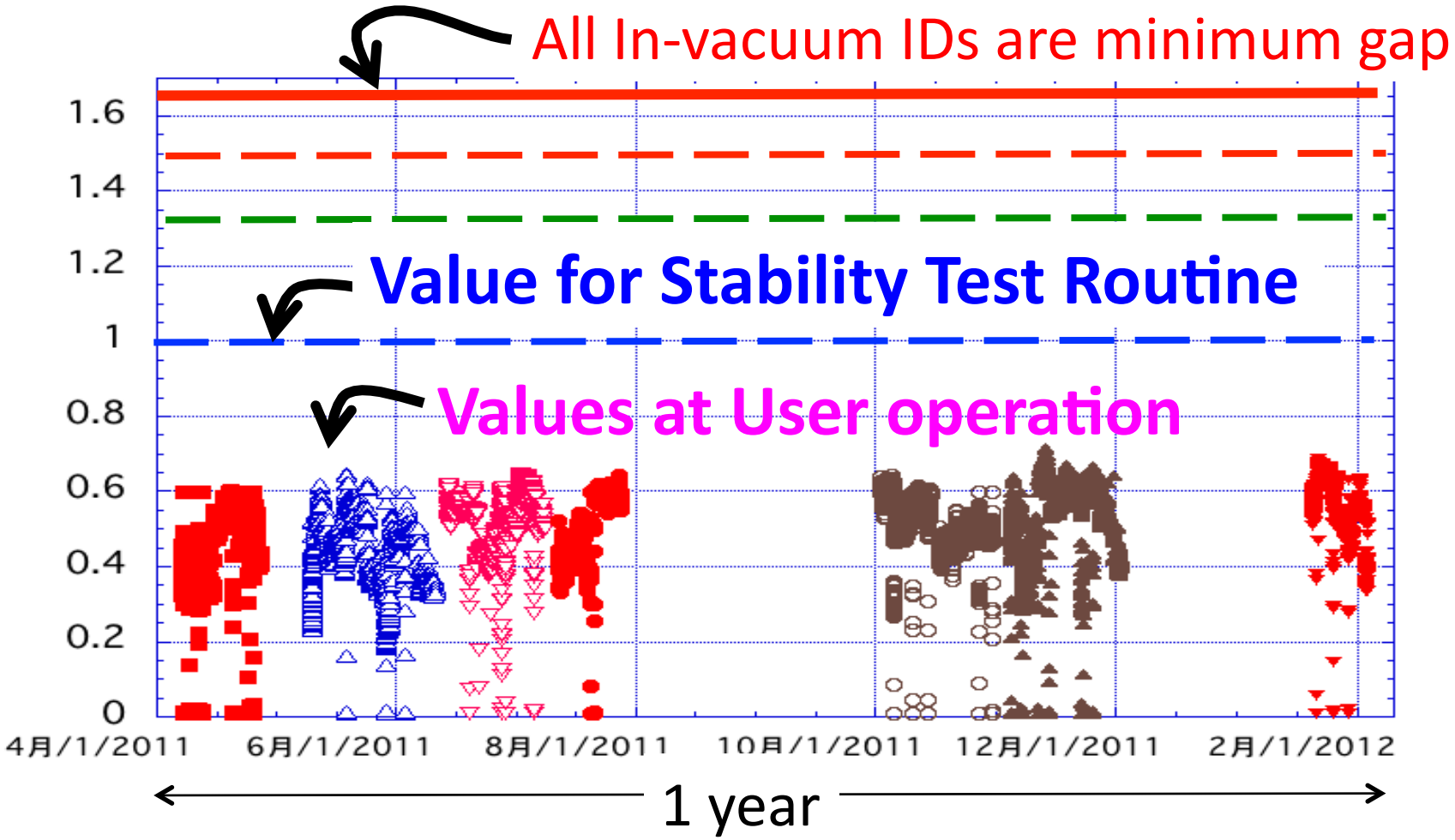

Suppression of Single-bunch instability by Feedback

mode-coupling (fast head-tail) for V (and H : weak)

Chromaticity = 1 (< 3) for wide dynamic aperture

In-vacuum IDs **Open**

3.5 mA/bunch	=>	14 mA/bunch
Feedback **OFF**		**ON**

~ simulation result

In-vacuum IDs **Close** (Partly ~ user operation)

2.5 mA/bunch	=>	6 mA/bunch
Feedback **OFF**		**ON**

5 mA/bunch for User operation

Simulation

Home made code (SISR)

Wake potential

Geometrical wake : Simulation by MAFIA

bellows, weldments, flanges, RF cavities,

tapers, BPMs, offset

Resistive-wall wake : Theoretical Wake

CSR not included

Microwave instability Threshold :

~ 3mA/bunch for

CSR (theory)

Simulation based on Geometrical Wake

Observation

http://accelconf.web.cern.ch/accelconf/e96/PAPERS/WEPG/WEP104G.PDF

http://acc-physics.kek.jp/SAD/SAD2006/Doc/Slide/Nakamura.pdf

Comparison with Experiment

Longitudinal

Measured

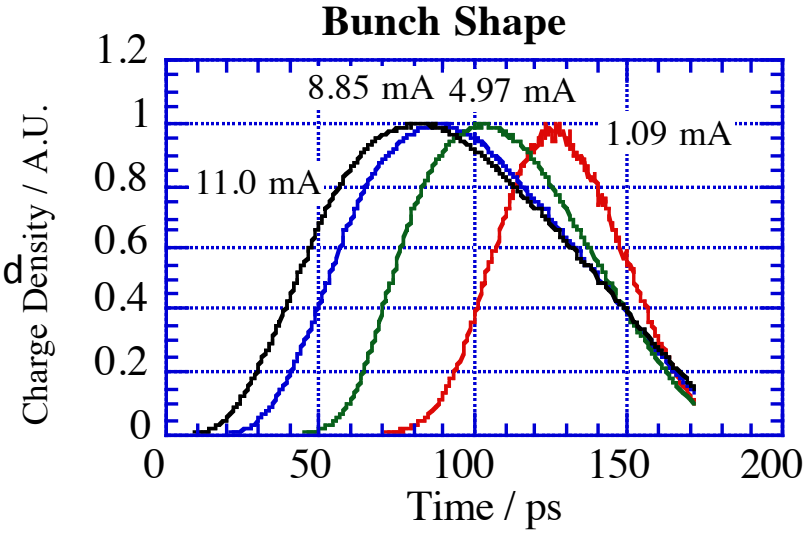

Simulation

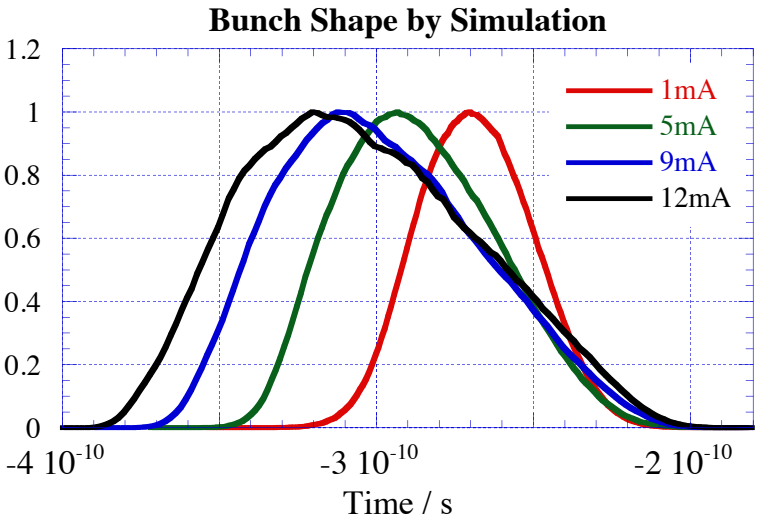

Energy Spread

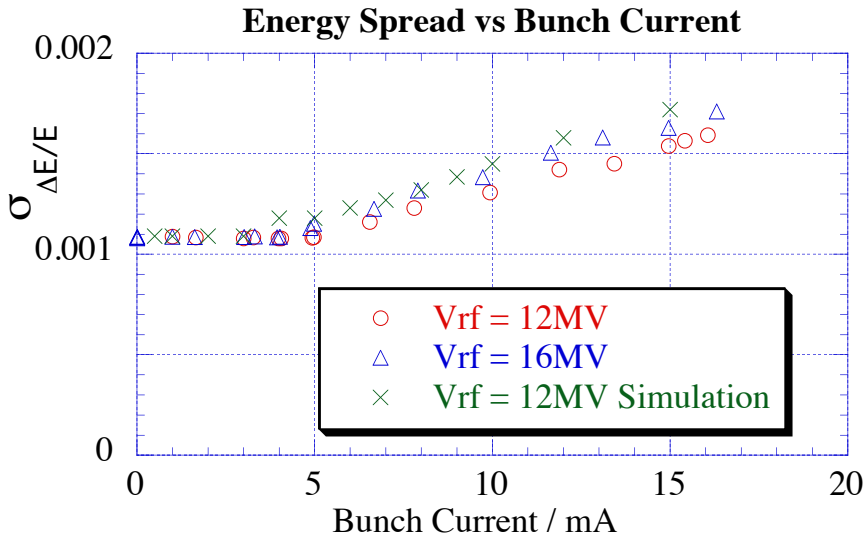

additional
Inductive wake ~ 40nH
is required for bunch length

Comparison with Experiment

Vertical Single-Bunch Instabilities

Simulation based on Calculated Wake Function

-4.3 0.5mA/bunch (m=0 head-tail)

0.24 3.5-4mA/bunch (mode-coupling)

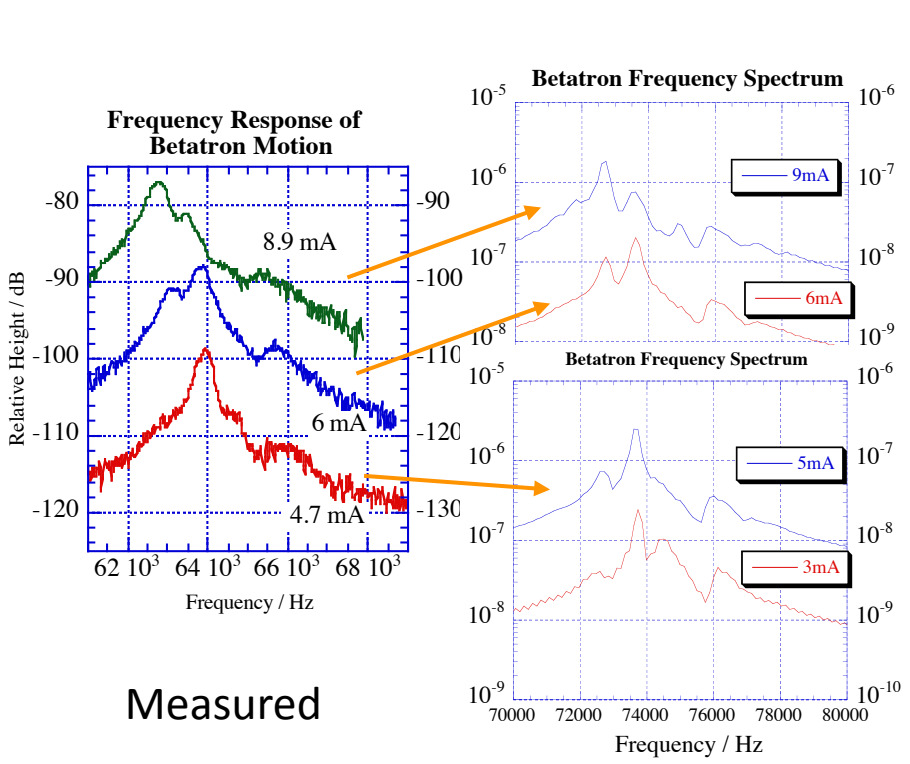

Measured

Simulation

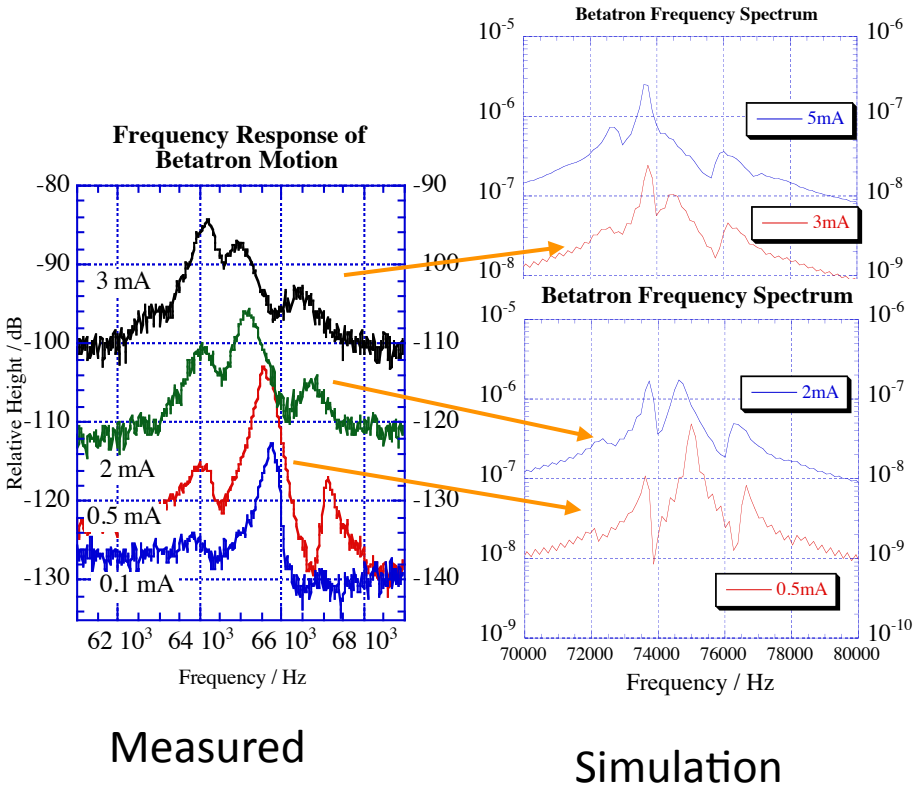

Measured

Simulation

Vertical Beam Size Growth by ID radiation profile monitor

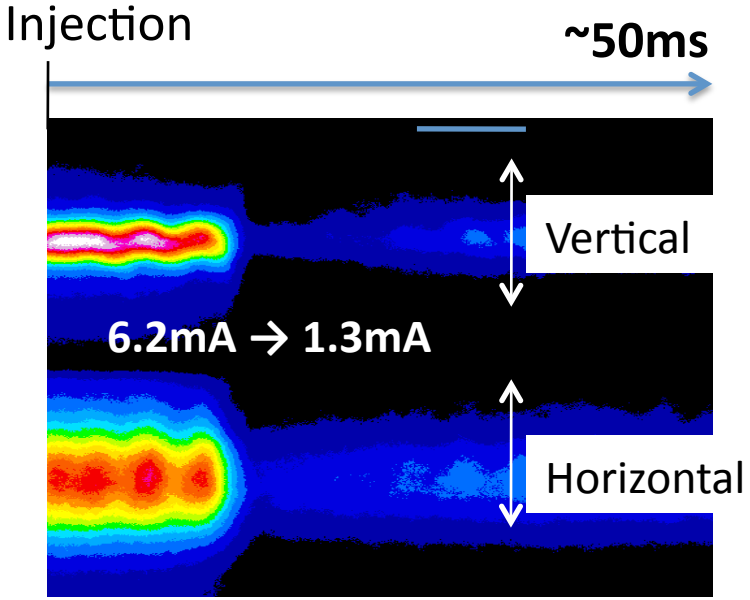

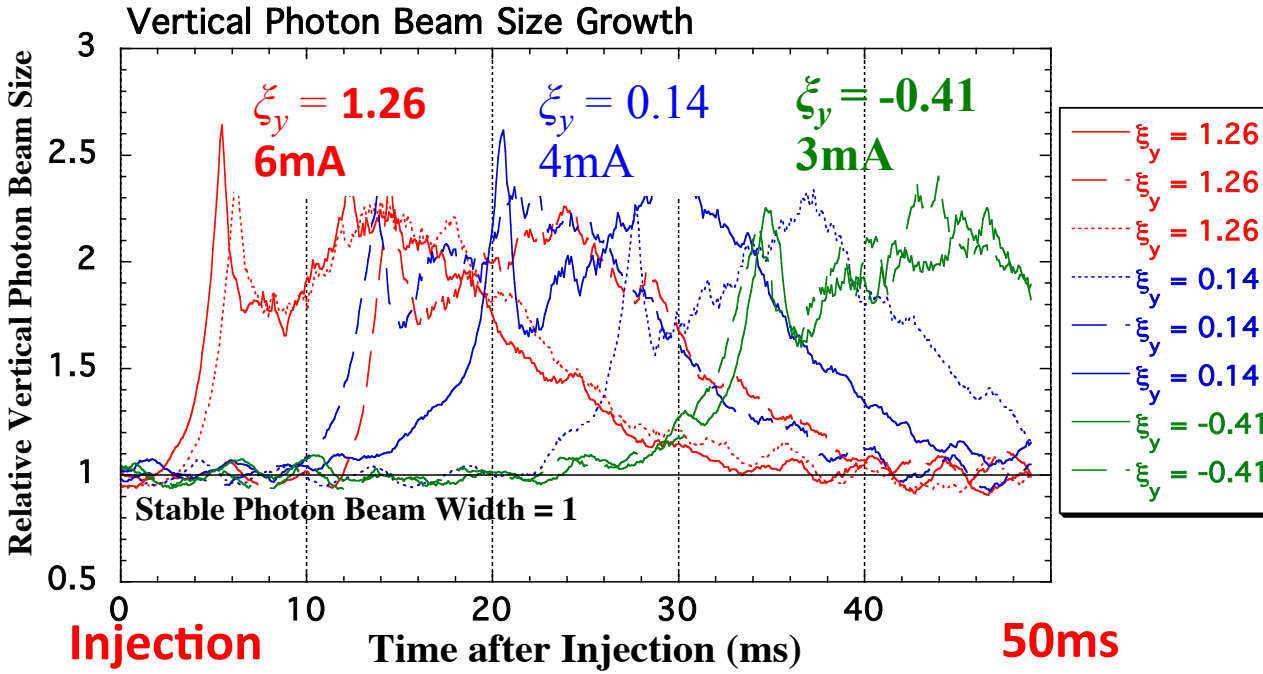

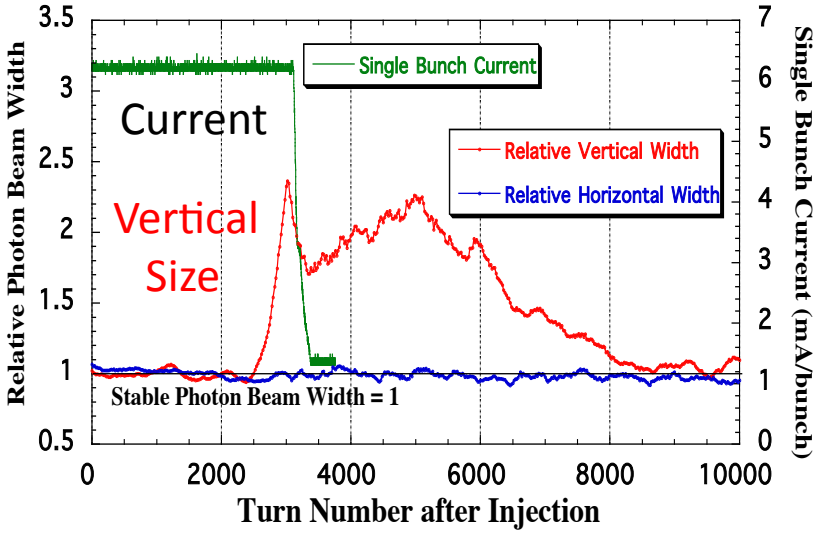

Low chromaticity
- low growth rate of beam size
- low threshold bunch current

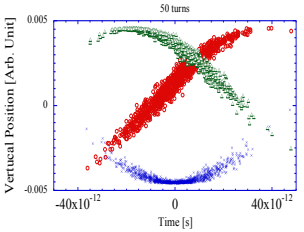

Feedback suppresses only
- CM motion

chromaticity
- mixing of CM motion and head-tail motion

Indirect suppression of head-tail motion ??

High Feedback Gain for Vertical

~ Stability Limit of the feedback

To High Feedback Gain

=> Tune shifts to Unstable region (FIR filter phase : 0deg to 180 deg)

=> Unstable or Fragile against perturbation

Selection of FIR filters

Vertical Fractional Tune 0.35

3-taps

Feedback Stability and FIR filter response

$$y_n = \sum_{k=1}^{N} a_k x_{n-k}$$

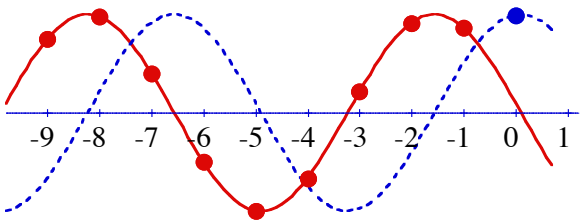

To High Feedback Gain

=> Tune shifts to Unstable region (FIR filter phase : 0deg to 180 deg)

=> Unstable or Fragile against perturbation

Feedback Output saturated by the oscillation signal

~ Fractional tune = 0.5

3gap (**Red line**) => 4tap (Green line) : solved

FIR filter gain and phase for target tune 0.35

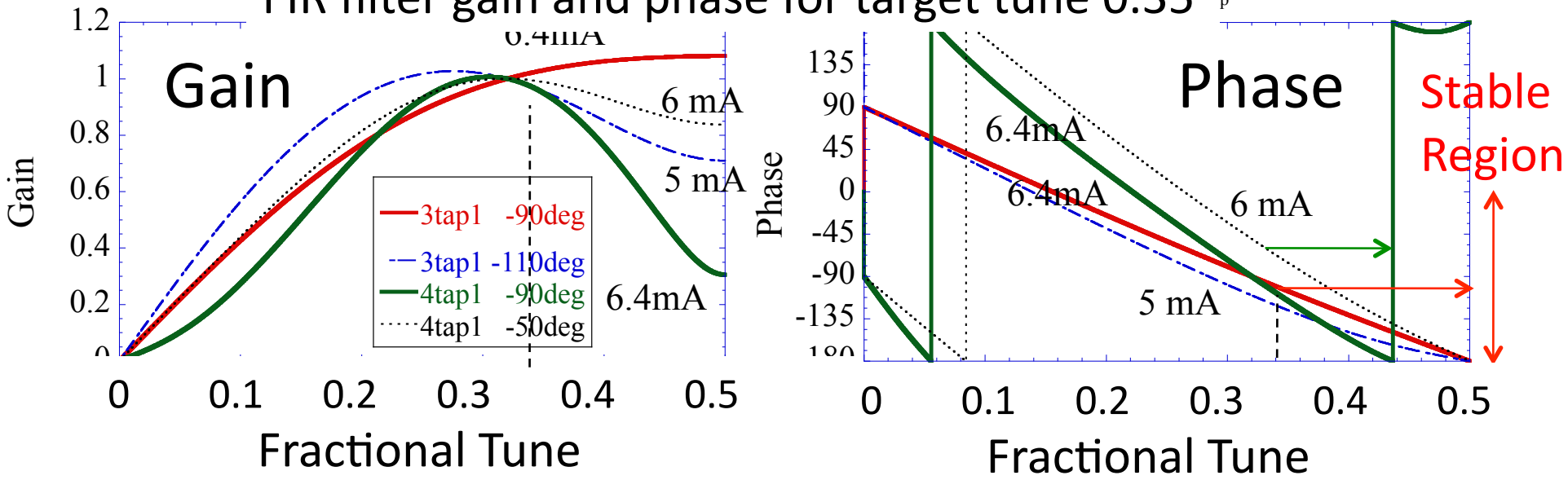

CM motion feedback

Further improvement of the bunch current is hopeless...

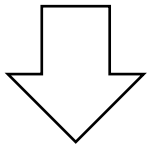

Head-tail motion feedback ????

Head-tail Kicker is designed

Head-tail Motion detector : now trying ....

This Autumn ???

Collaborators are welcome!

Longitudinal Bunch-by-bunch Feedback

Longitudinal Instability Driven by Cavity HOM (TM011)

8 GeV: stable ~ 100mA, 6 GeV: ~ 90 mA, 4 GeV : ~ 20mA

New Shape Energy Kicker

High Shunt Impedance / m : x3 of over damped cavity (ODC) type

Higher Frequency 13/4 fRF = 1.65 GHz (!= 11/4 for ODC type)

3 waves + 1/4 ← → 2 waves + 3/4 wave for every buckets

=> Eliminate QPSK modulator at cavity drive stage

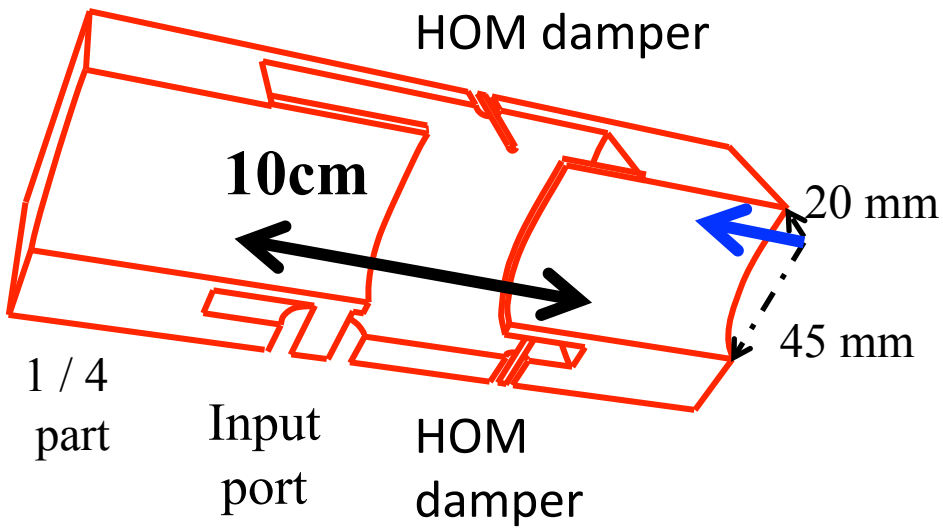

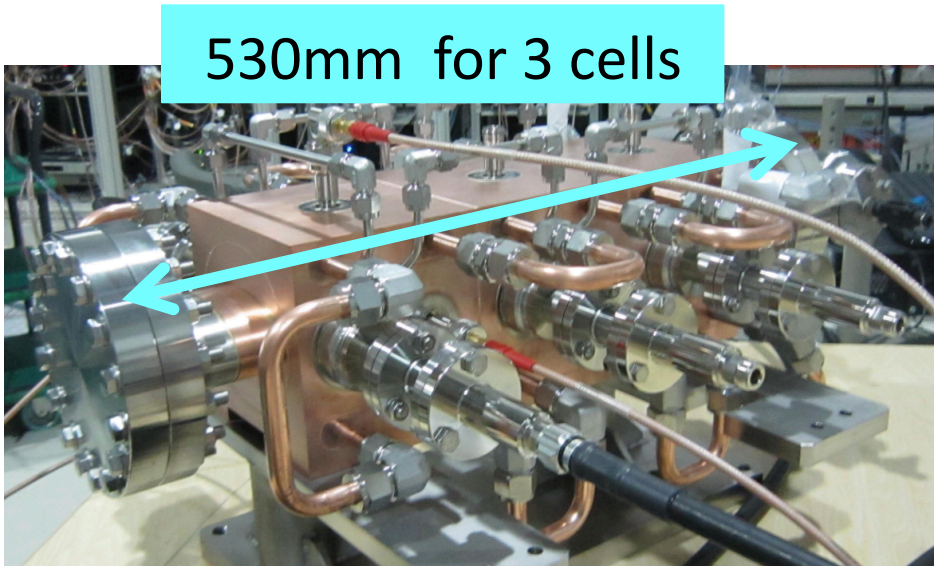

http://accelconf.web.cern.ch/accelconf/IPAC2011/papers/mopo007.pdf

http://ibic2013.org/prepress/papers/tupc18.pdf

Simple Drive Circuit for Kicker : 13/4 f_{RF} (Passive, No QPSK)

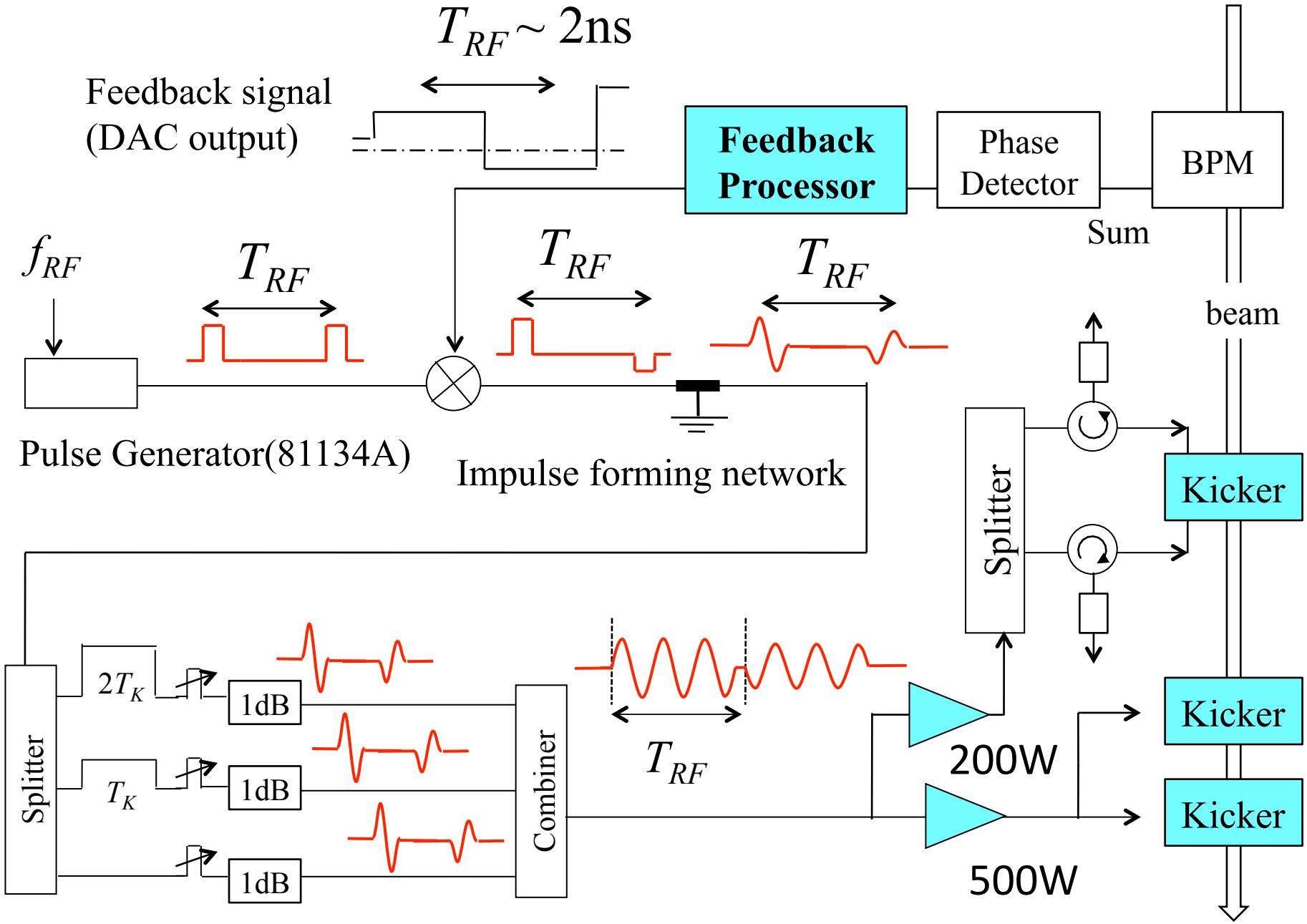

Development of New Feedback Processor

Current Processor : 2003 10 years ago

New Processor is being developed at SPring-8

- Collaborating with SOLEIL
- Advances of
  - FPGA (Virtex-7)
    - Faster and Larger circuits
  - ADC (12-bit, 500MS/s)
    - 1 ADC <= 4 ADC 127MS/s)
- Many ADCs and DACs
- Ethernet
- Hardware + FPGA program until this Autumn (Hopefull)

Hardware/Software is Open and Free

Collaborators are welcome !

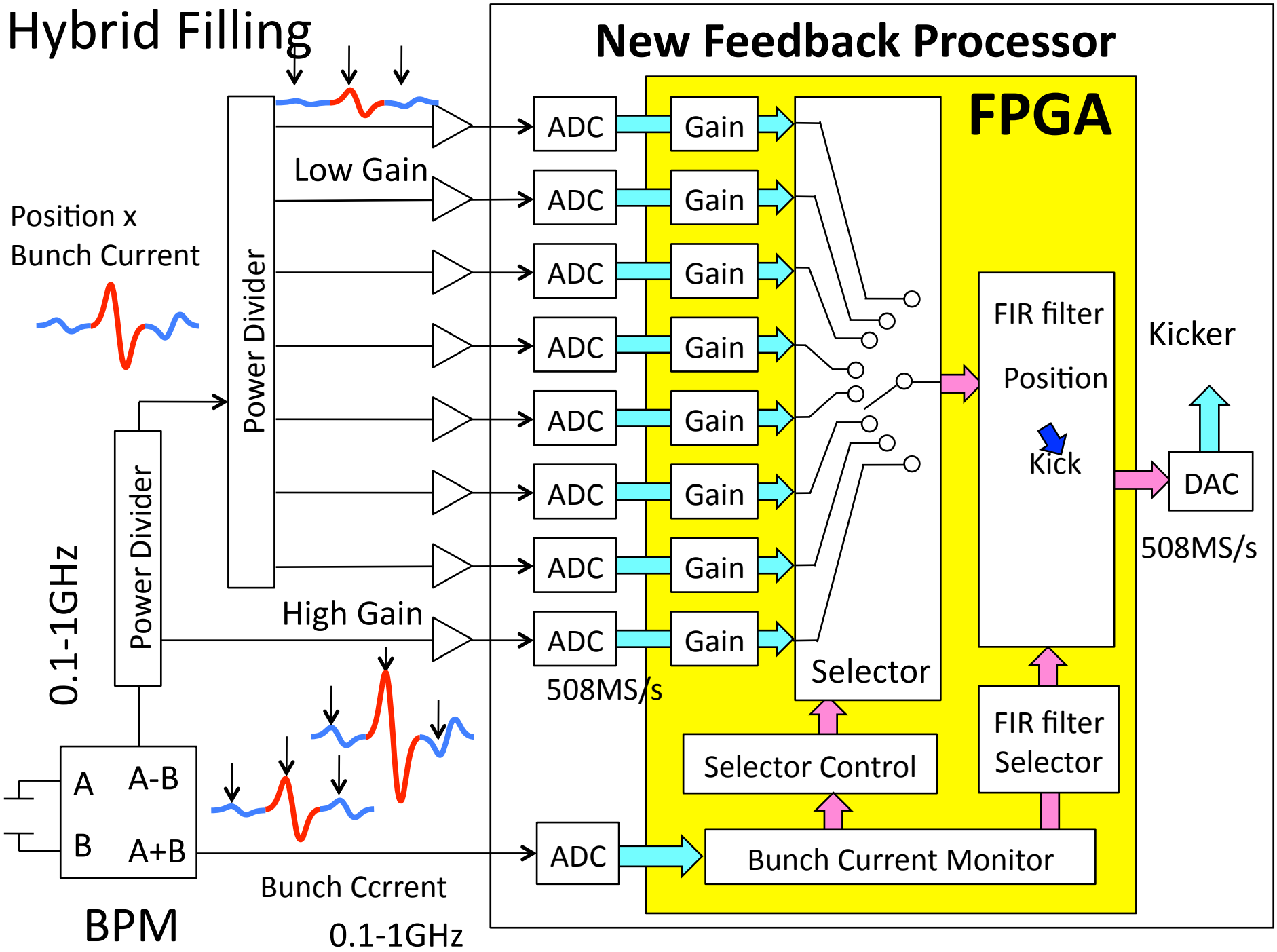
Hybrid Filling
New Feedback Processor
FPGA
Low Gain
Position x
Bunch Current
Power Divider
Power Divider
0.1-1GHz
High Gain
ADC
Gain
FIR filter
Position
Kick
Kicker
DAC
508MS/s
Selector
Selector Control
FIR filter
Selector
Bunch Current Monitor
A
A-B
B
A+B
BPM
Bunch Ccrrent
0.1-1GHz

Faster and more Stable Feedback

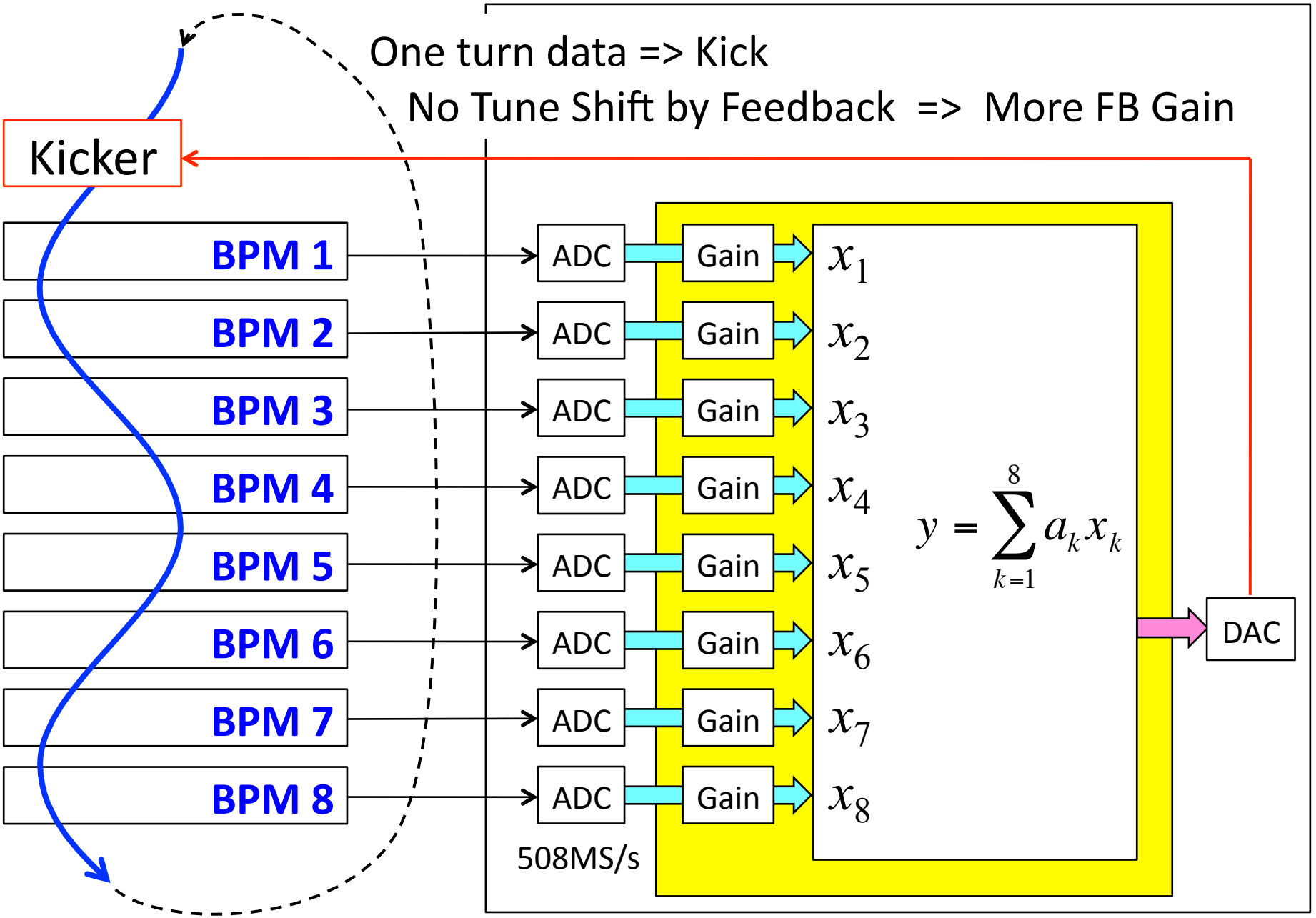

Self tuning of timing, gain, ...

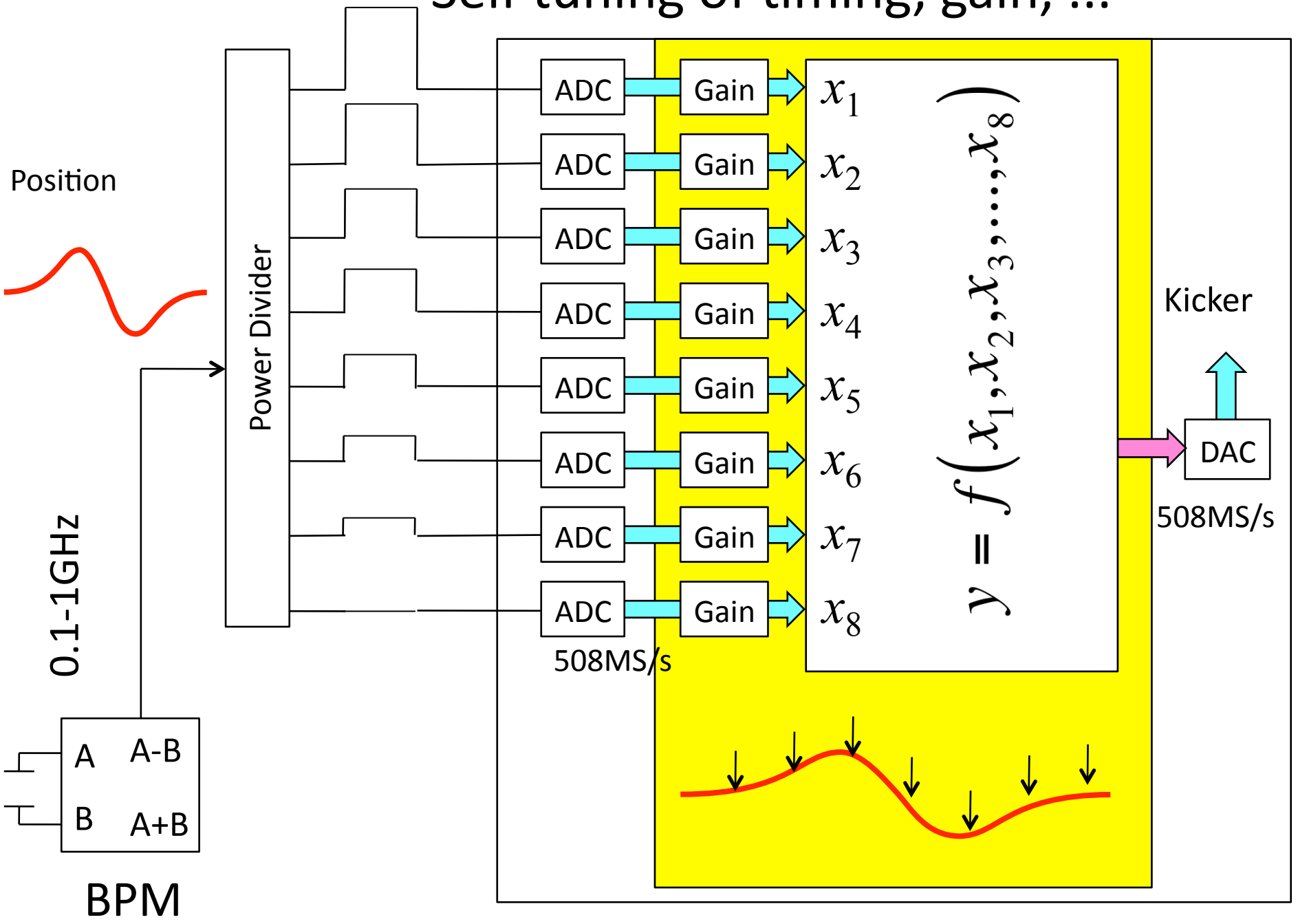

Ethernet port (not connected. intelligent GbE board (FMC) will be installed this FSY)

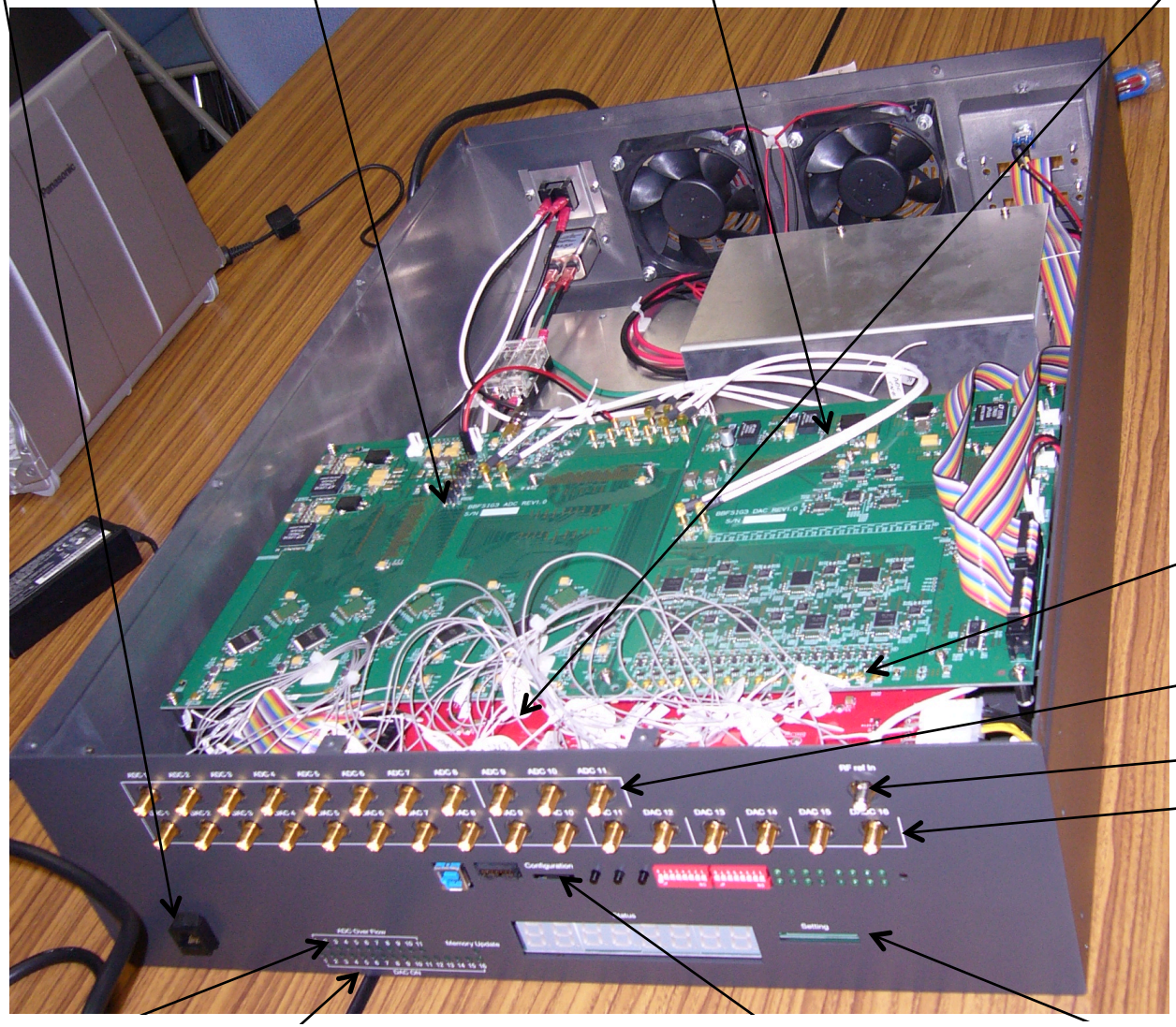

50kV Variable Field Fast Kicker for 2ns Bucket-by-bucket Injection/Extraction

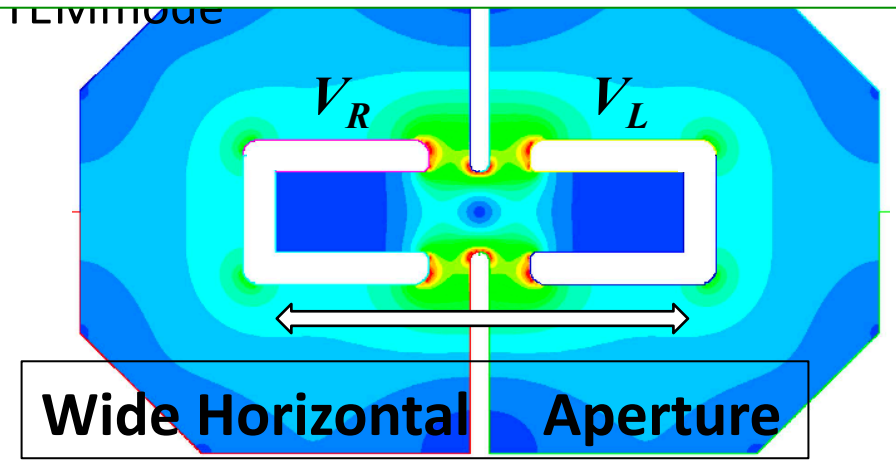

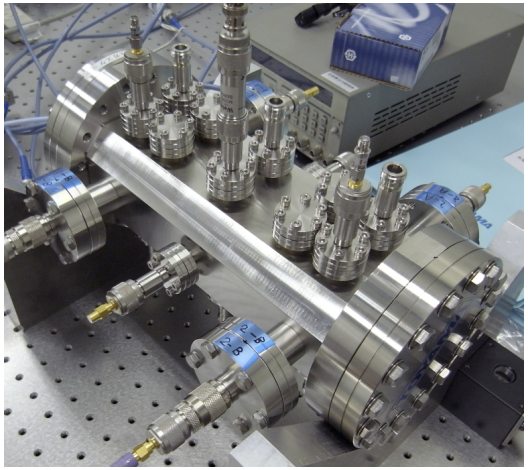

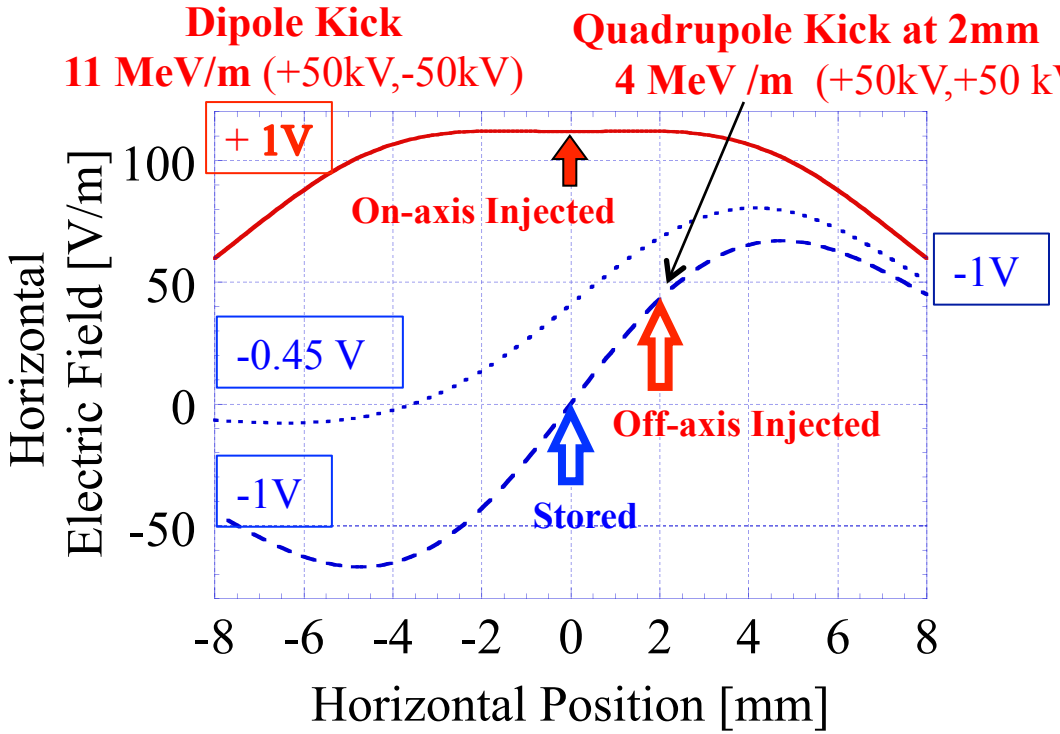

50kV test at Bench
- No discharge
- good pulse response

Beam test at Linac with
- 1 pulse generator

=> Consistent with design
- kick width ~ 4ns : OK

http://accelconf.web.cern.ch/AccelConf/IPAC2011/papers/tupc095.pdf

Field Strength Distribution in Horizontal

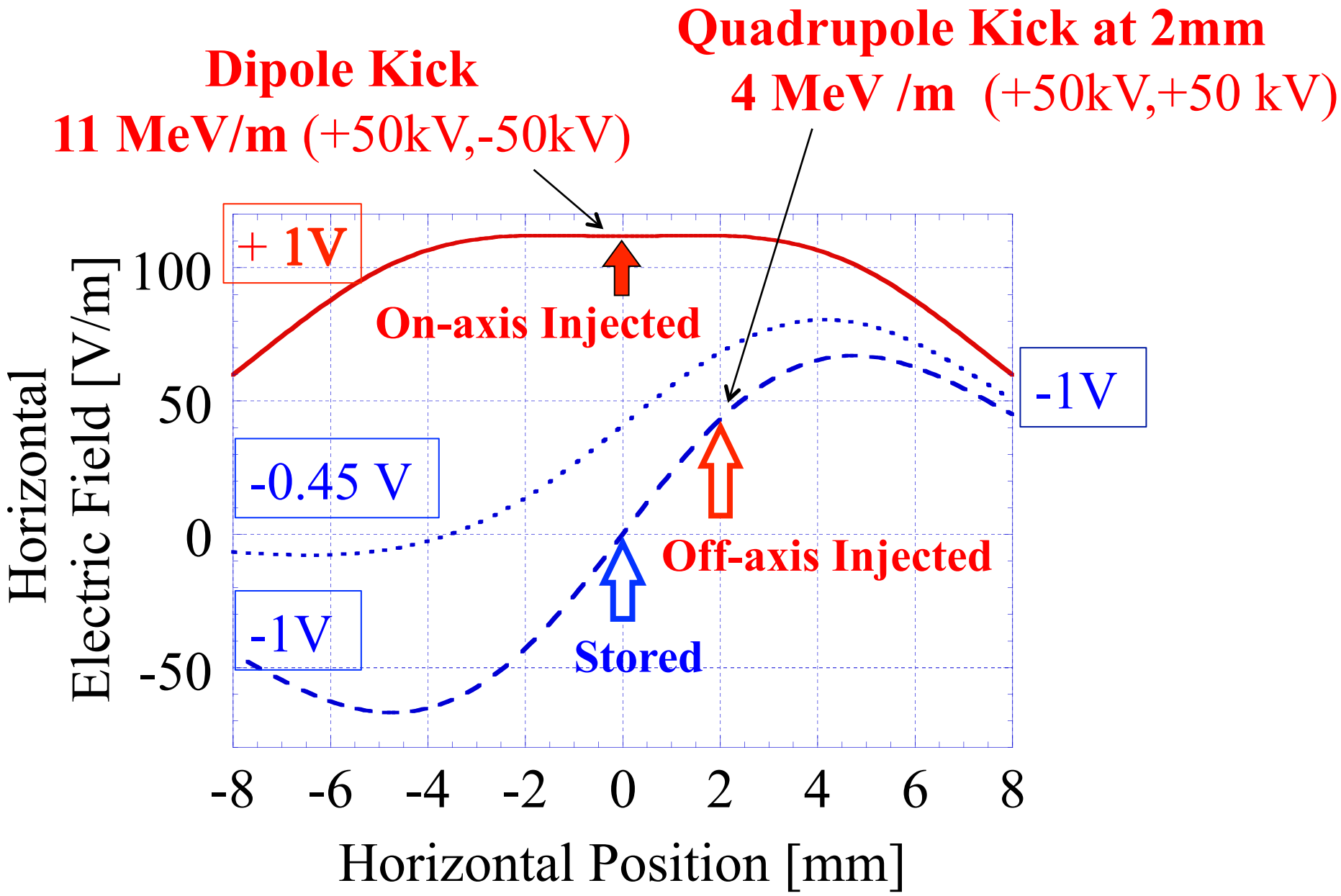

High Transverse Impedance (Horizontal) !!

Loss Factor

Horizontal value (kx) is

x 70 of

our Bunch-by-bunch kicker

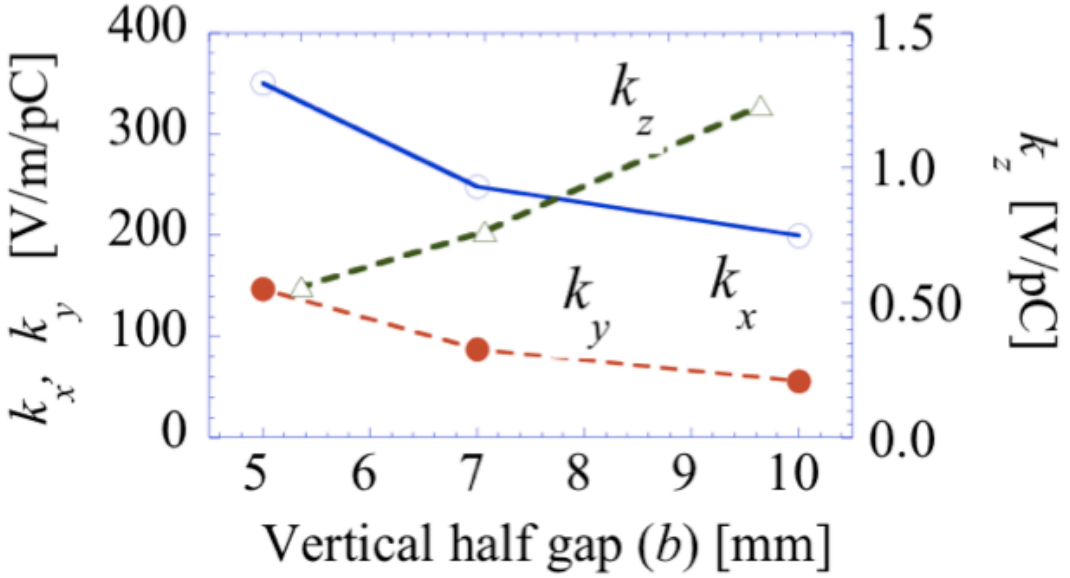

Gap Dependence of Quadrupole Field Strength

Quadrupole ~ $1/(\text{gap})^2$
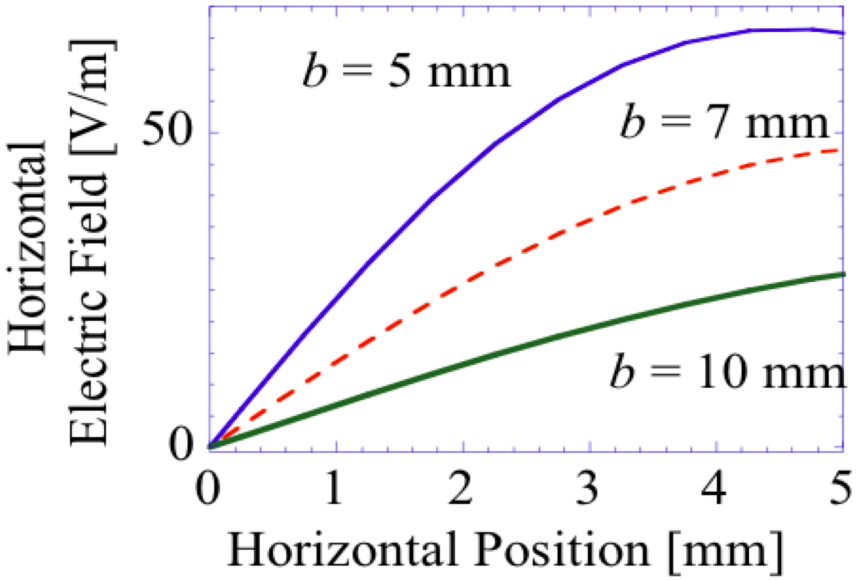
(Dipole ~ 1/gap)