SIEMENS

Sk Resident

Институт Ядерной Физики имени Г.И.Будкера

ИТЭФ им. Алиханова

BEVATECH

Goethe-Universität Frankfurt am Main Johann Wolfgang Institut für Angewandte Physik

Science & Technology Facilities Council

Development of high power solid-state amplifiers at Siemens

Solid-State Microwave Generator

Content

SSMG project

- Motivation
- System architecture

SSMG for cyclotrons

- Overview
- RF module
- Power combiner
- Test Results

SSMG for ESS

- Overview
- RF module
- Power combiners
- PIN-diodes

Conclusions

Siemens AG 2013 All rights reserved.

Motivation

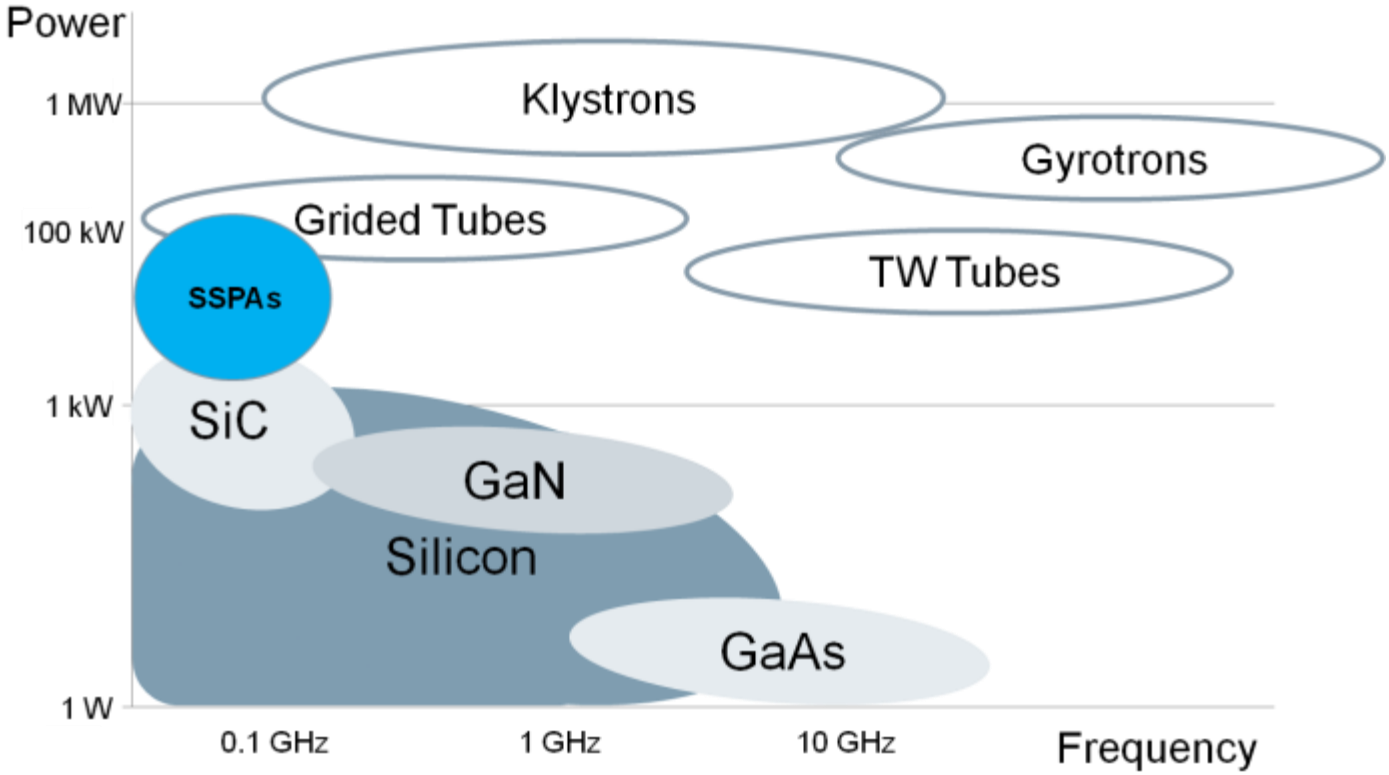

- **SSPAs** – complex combination of several <1 kW transistors
- **Today:** Only few SSPAs above 100kW (commercial and prototypes)

Motivation

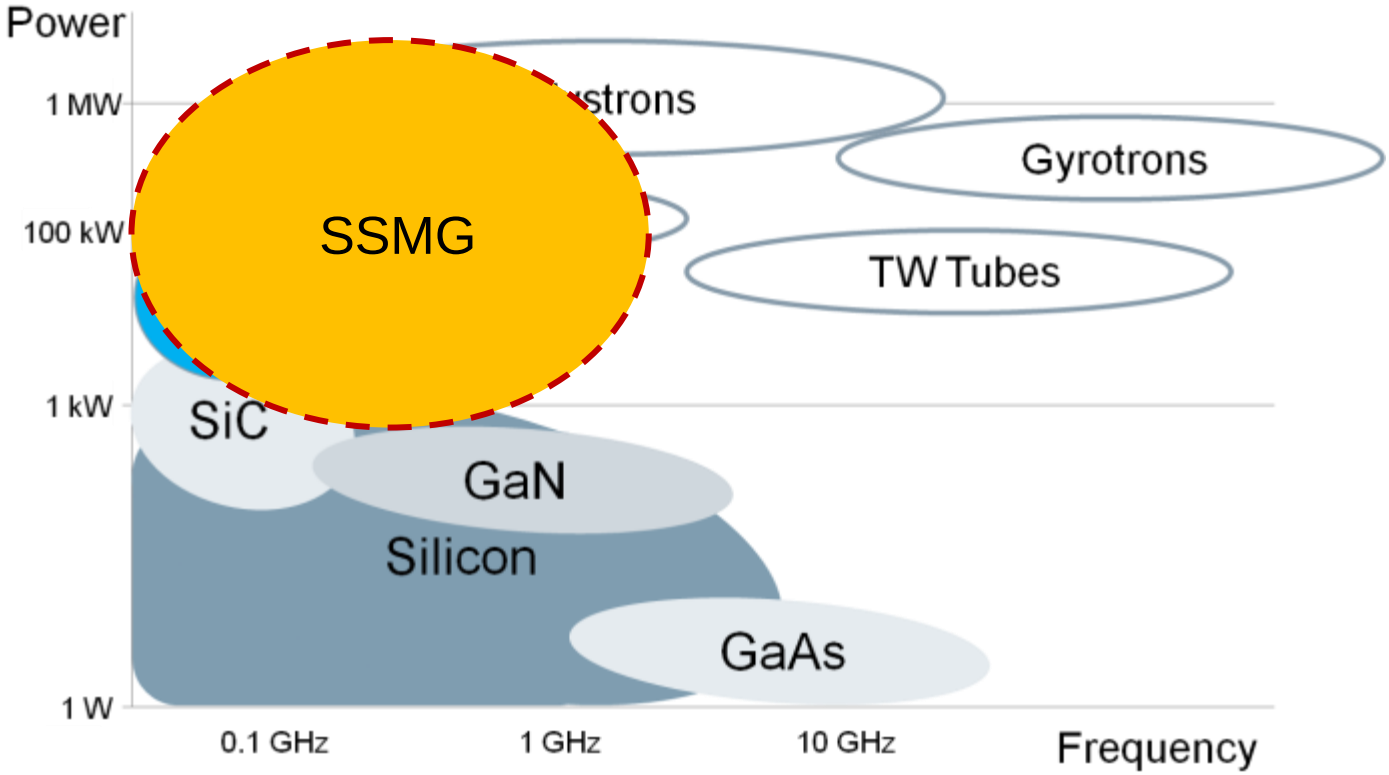

- **SSPAs** – complex combination of several <1 kW transistors
- **Today:** Only few SSPAs above 100kW (commercial and prototypes)
- **Goal:** Substitute vacuum tubes with SSPA using:
  - Effective, simple power combination
  - Highest power transistors available

Content

SSMG project
Motivation
➢ System architecture

SSMG for cyclotrons
Overview
RF module
Power combiner
Test Results

SSMG for ESS
Overview
RF module
Power combiners
PIN-diodes

Conclusions

SSMG
Unified system architecture

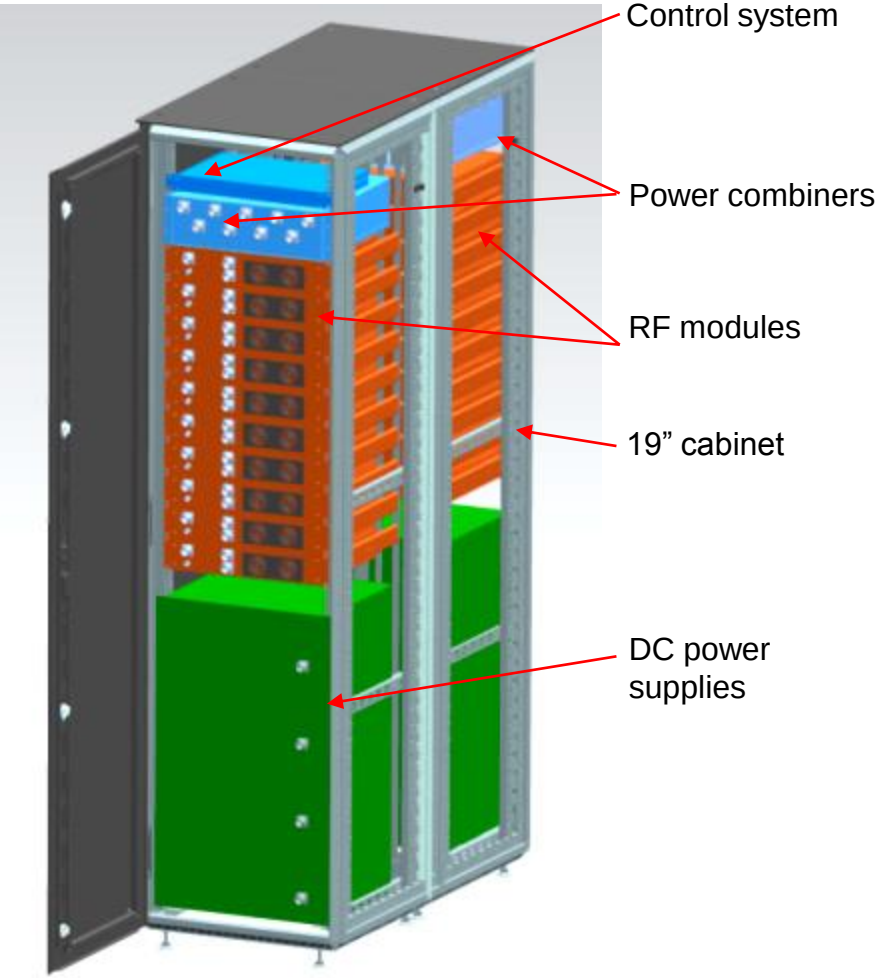

System approach

- Unified architecture for various applications, frequencies, powers (up to 1.3 GHz, 3 MW)
- High modularity and scalability
- Reduce costs and development efforts
- Use off-the-shelf components as much as possible
- No handmade parts/tuning
- All components fit into standard 19“ cabinet

Custom designed components

- RF power modules
- Power combiner
- Control system (designed once for all applications)

Standard components

- DC power supply
- 19” cabinet
- Auxiliaries, e.g. industrial computer, signal generator, active RF splitters

SSMG
Generator structure

- Combine 2-8 transistors on the PCB. 2-8 kW/module
- Combine RF modules with minimal cascades (1-2) ~10 inputs only
- Use of RF switches to keep efficiency with broken modules

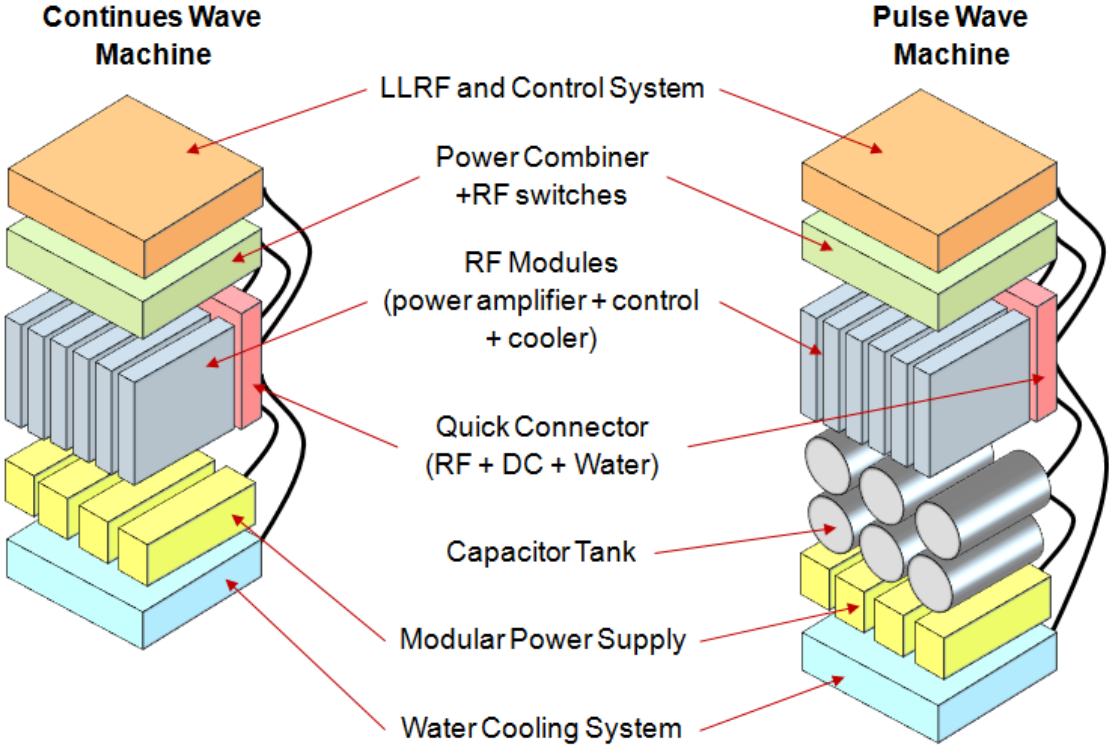

RF module
72MHz, 2.1 kW CW

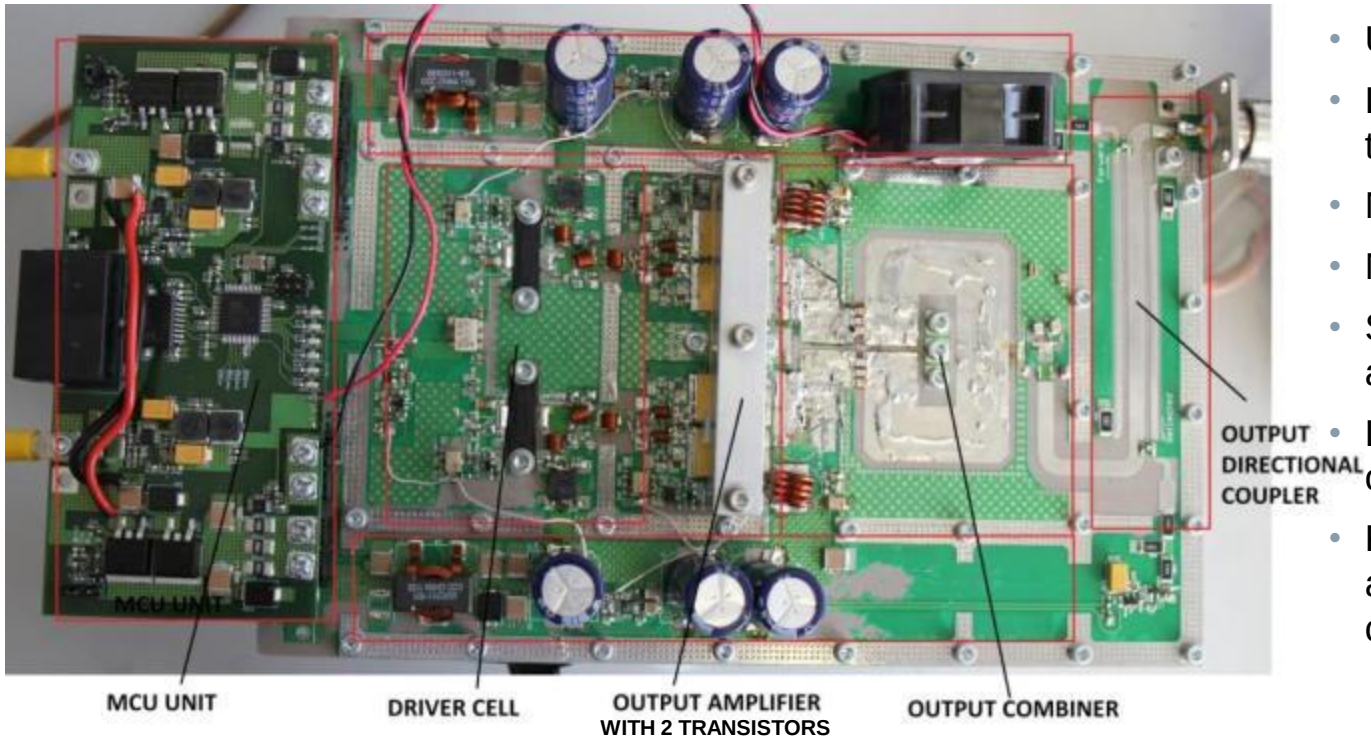

- Up to 8 transistors on PCB
- Low loss plane transformer/combiner on PCB
- No hand made parts
- No circulator
- Semi-automatic production and assembling
- LLRF, controls, telemetry onboard
- Frequency change: only driver and output circuits to be changed

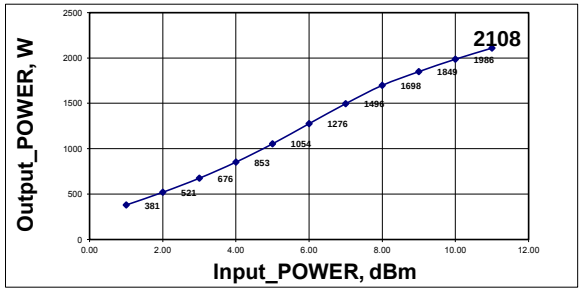

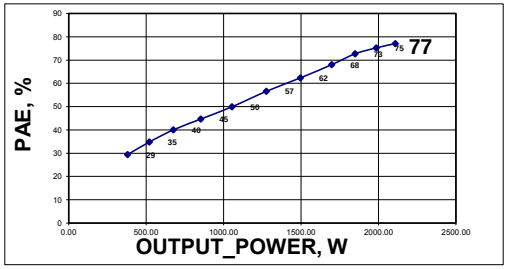

RF Power combiners

- Low loss (< 0.5%)
- >~10 high power inputs at once
- Power division equality (<1%)

- High inputs isolation (>15 dB) - possible to operate without 1 – 3 RF modules
- Only 5% efficiency loss when 3 RFM switched off

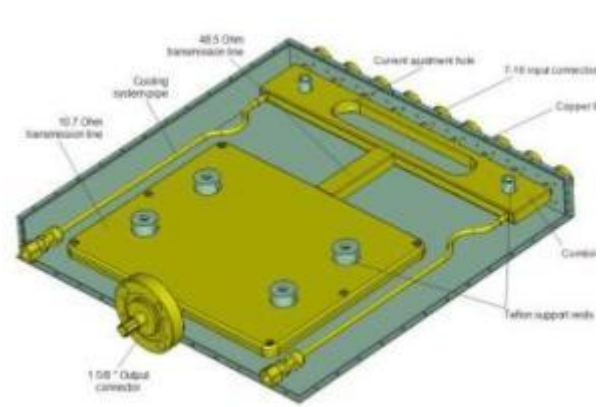

9:1 plane combiner

- Operating Freq: 72.5 MHz
- Power: 16 kW
- Dimensions: 400x420x47 mm^3
- E_{pk}@18kW = 4.2 kV/cm
- Power Dissipation ~ 0.5%
- Isolation 16 dB
- Return loss -30dB

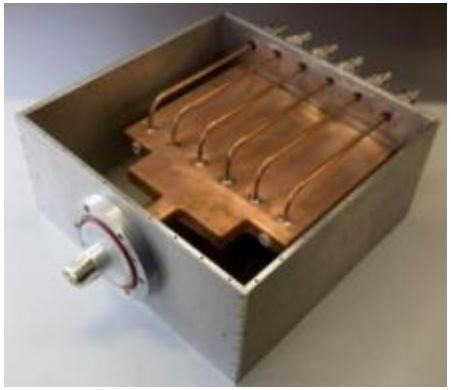

12:1 loop combiner

- Operating Freq: 352.21 MHz
- Power: 96 kW with 5% d.c.
- Dimensions: 400x400x180 mm
- Epk@100kW = 7.56 kV/cm;
- Power Dissipation ~ 0.5%
- Isolation 20 dB
- Return loss -36 dB

RF switches on PIN diodes

Circulator

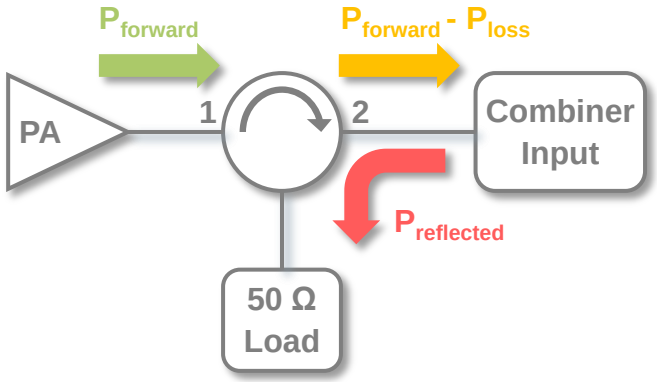

Circulator operation

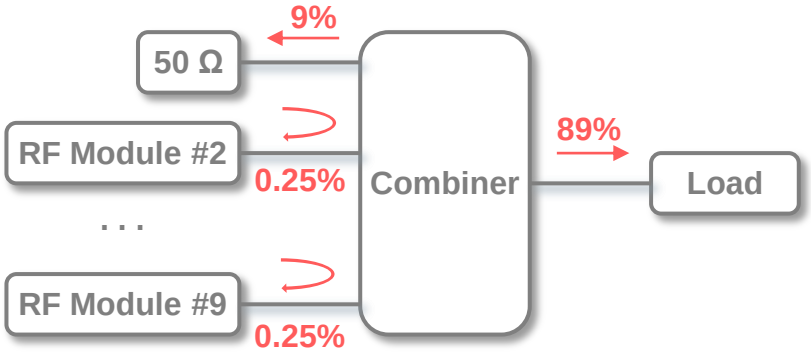

PIN diode based switch

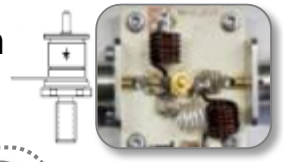

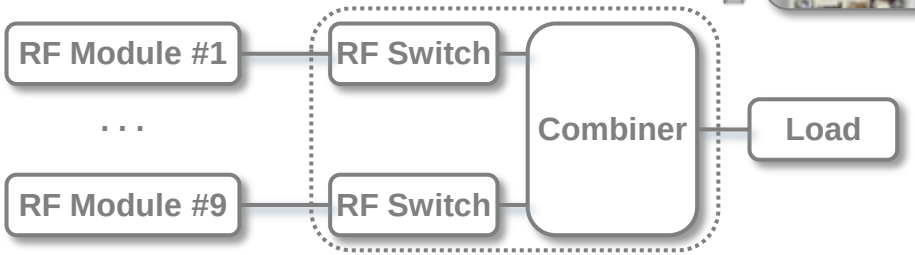

PIN diodes are connected directly to the combiner inputs

- Introduces a Short (or open) @ combiner input
- Small power losses
- Can be used for automatic calibration

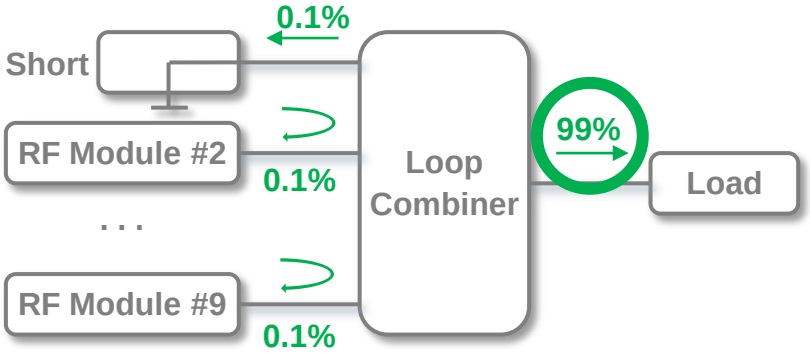

Versatile control system

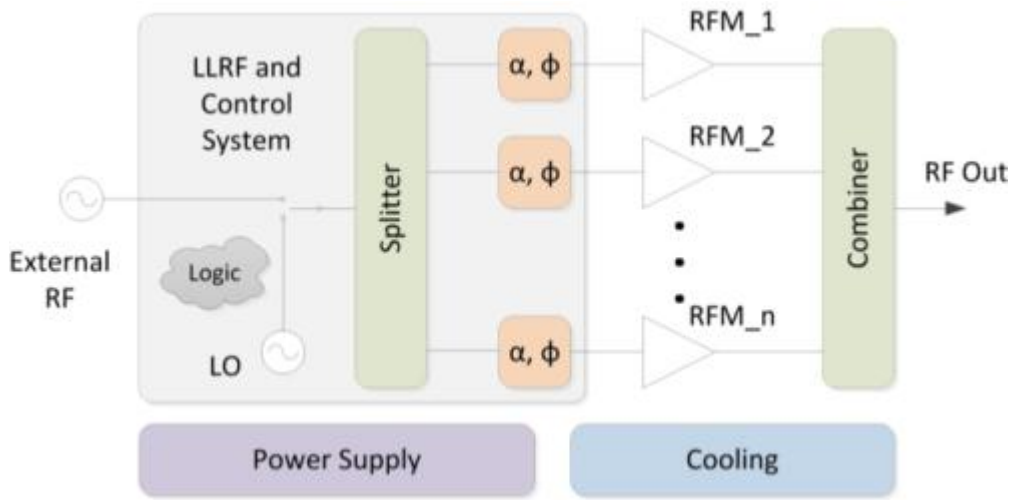

- Frequency of operation up to 1.3 GHz
- LO or external RF source operation
- Continuous and pulsed mode operation
- Up to 96 RF Modules
- Automatic a, φ calibration

Control systems hierarchical connection capability

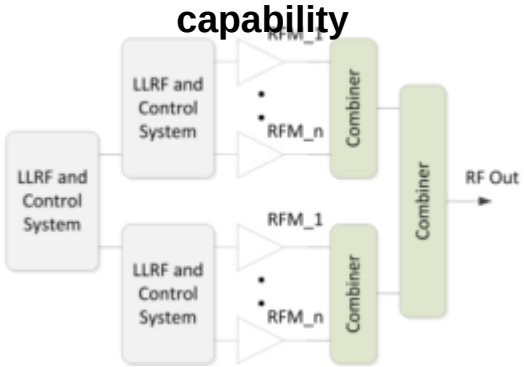

Normal operation with single/multiple RF Modules failed

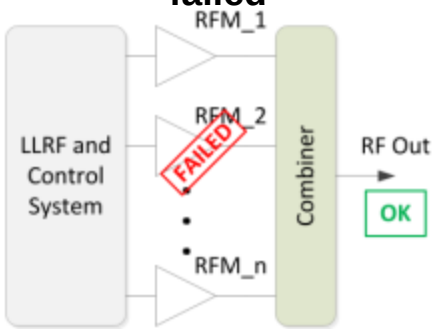

Different cable length balancing

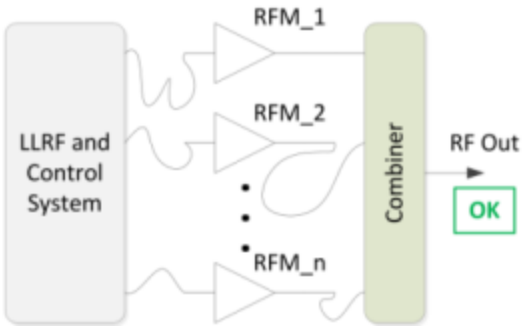

Siemens AG 2013 All rights reserved.

CONFIDENTIAL © Siemens AG 2014. All rights reserved

Content

SSMG project
Motivation
System architecture

SSMG for cyclotrons
➢ Overview
RF module
Power combiner
Test Results

SSMG for ESS
Overview
RF module
Power combiners
PIN-diodes

Conclusions

Siemens AG 2013 All rights reserved.

SSMG for PET cyclotrons
72,5 MHz 18KW CW

SIEMENS

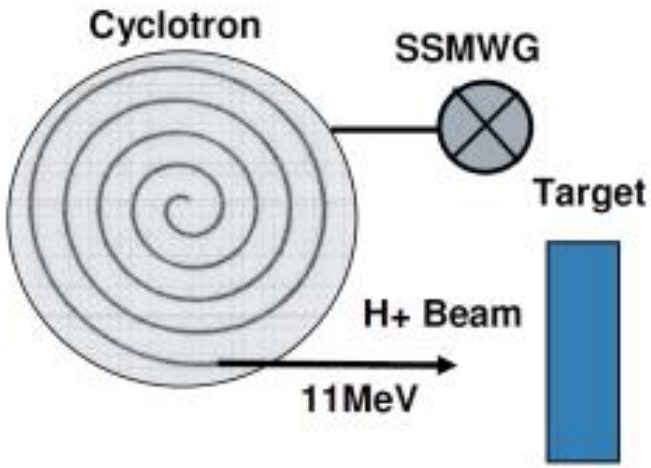

Conventional specification	
Beam energy	11MeV
Isotopes	^{18}F, ^{11}C, ^{13}N and ^{15}O
Frequency of operation	72-73 MHz
RF power	10 kW
Efficiency	28%
PA 3 dB bandwidth	~2 MHz
PA Class of operation	AB

- Upgrade for new energies/isotopes
- Increase power within current infrastructure
- Decrease maintenance/service costs
- Customized design

TARGET

- RF power: 16 kW
- Efficiency: >75%
- VSWR: 12:1
- Resonance search
- Resonance hold

SSMG for cyclotrons
Cabinet Design

30U Total ~ 1.4 m

- 9x 2kW RF modules (3 per each AC phase)
- 9:1 plane power combiner. 2U high
- Control system with resonance search & hold option
- AC distribution box
- Water cooling

Content

SSMG project
Motivation
System architecture

SSMG for cyclotrons
Overview
➢ RF module
Power combiner
Test Results

SSMG for ESS
Overview
RF module
Power combiners
PIN-diodes

Conclusions

SSMG for cyclotrons
RF module design

SIEMENS

Schematic Drawing of the 72 MHz RFPA

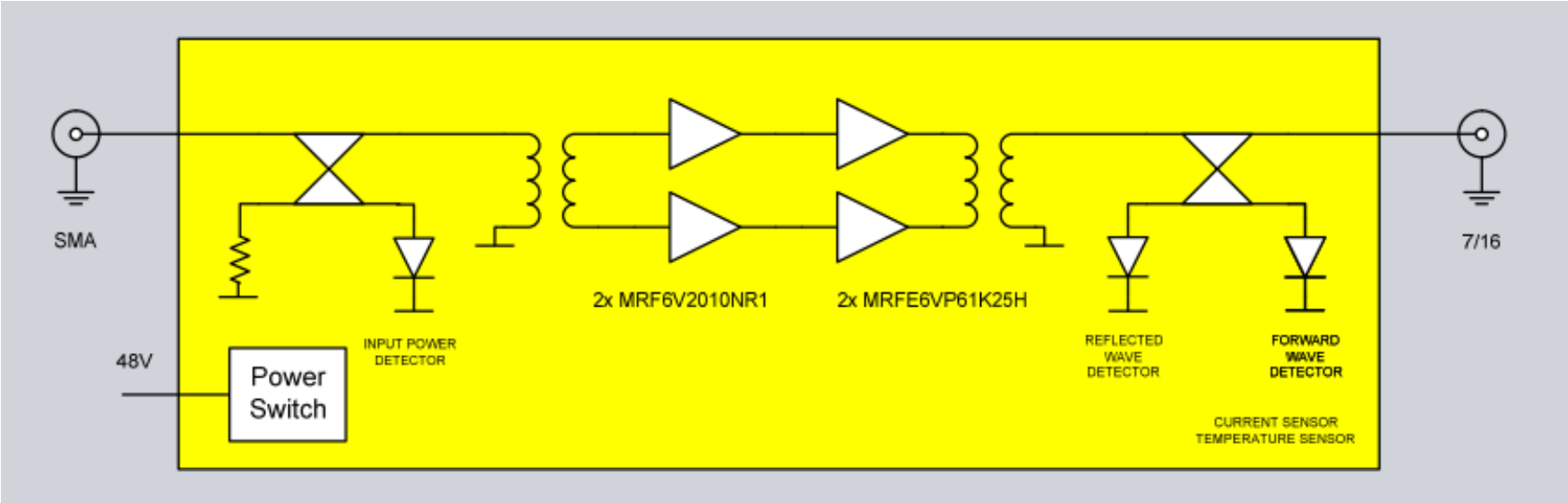

The power amplifier consists of an 180° power splitter, two pre-amplifiers and two final stage transistors followed by a 180° planar power combiner. The input power of the module and the power delivered to the load can be measured via directional couplers on the board.

SSMG for cyclotrons
RF module

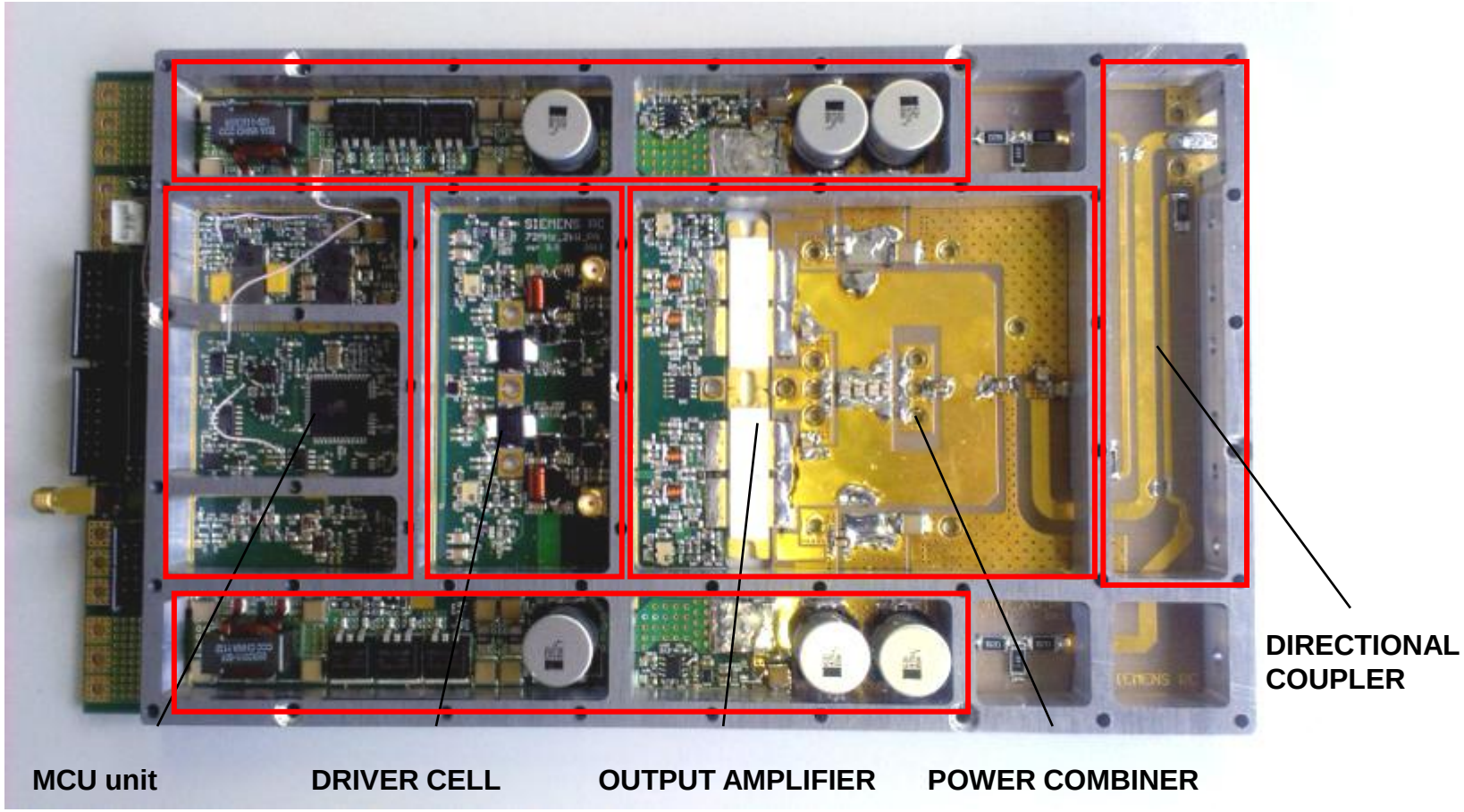

SSMG for cyclotrons
RF module measurements

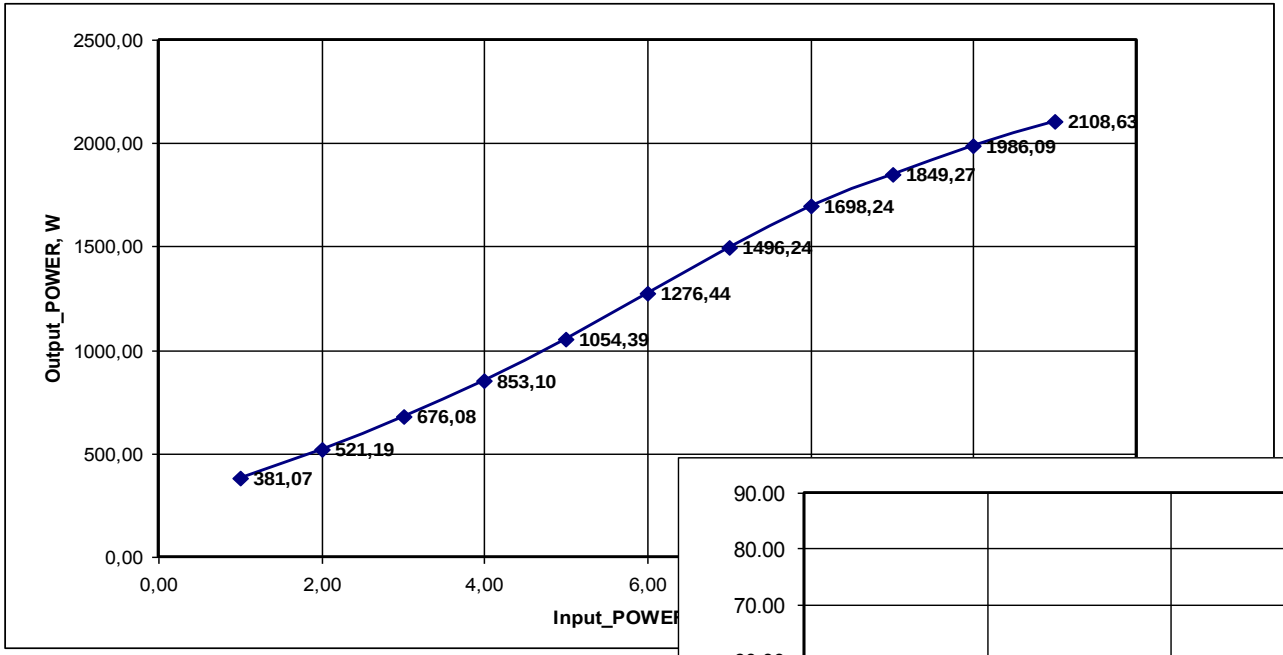

Output power of the amplifier can be tuned to max. 2.1 – 2.5 kW

The efficiency at saturated output power is better than 75%.

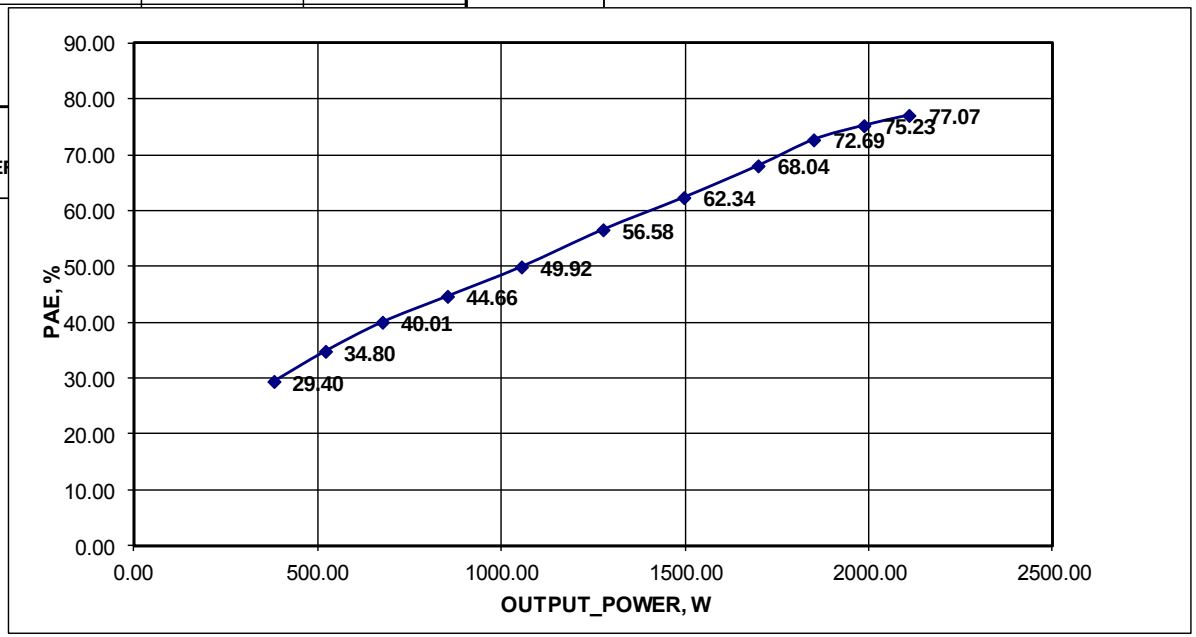

SSMG for cyclotrons
RF module assembly

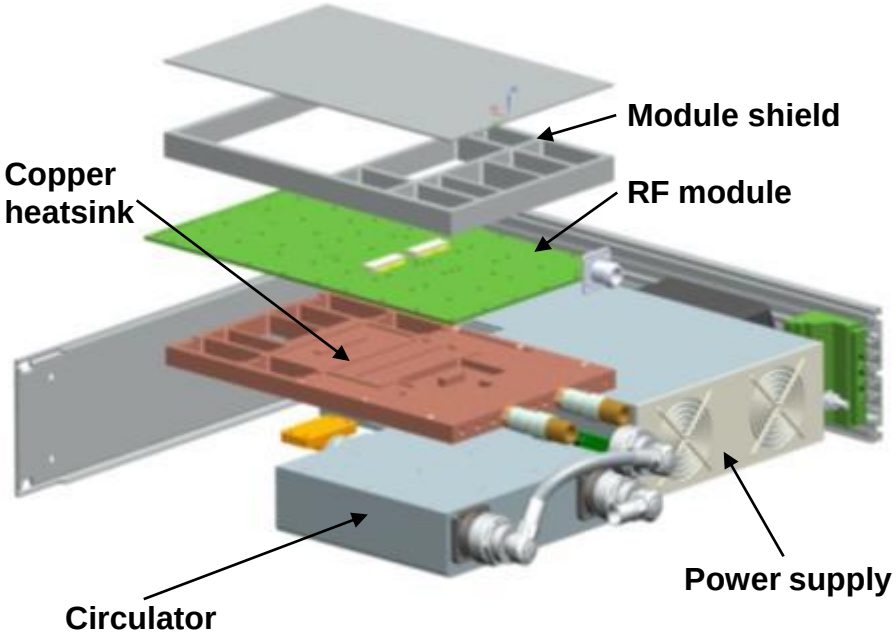

72.5 MHz RF module during tests, measured parameters:

- RF power output – 2 ÷ 2.5 kW
- RF input ~ 10 mW, Gain – 50 ÷ 55 dB
- Efficiency up to 77 %

Features

- Telemetry onboard: Forward, reflected wave, input amplitude, temperature
- One radiator for RFPA, Circulator and load
- 3kW power supply

Generator Cavity Load Measurement

Test bench

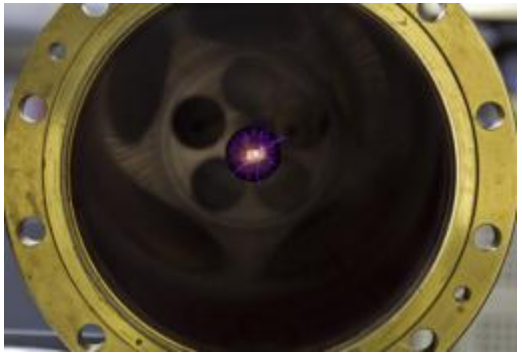

RF breakdown in the cavity

Cavity Q-factor of 2600

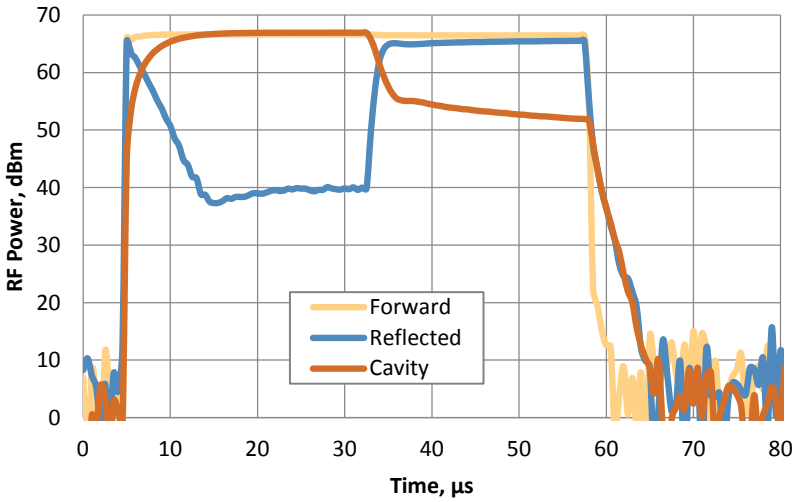

RF pulse at power level about 5 kW

✓ **Simulation can be compared with tests**

Content

SSMG project
Motivation
System architecture

SSMG for cyclotrons
Overview
RF module
➢ Power combiner
Test Results

SSMG for ESS
Overview
RF module
Power combiners
PIN-diodes

Conclusions

Power combiner model

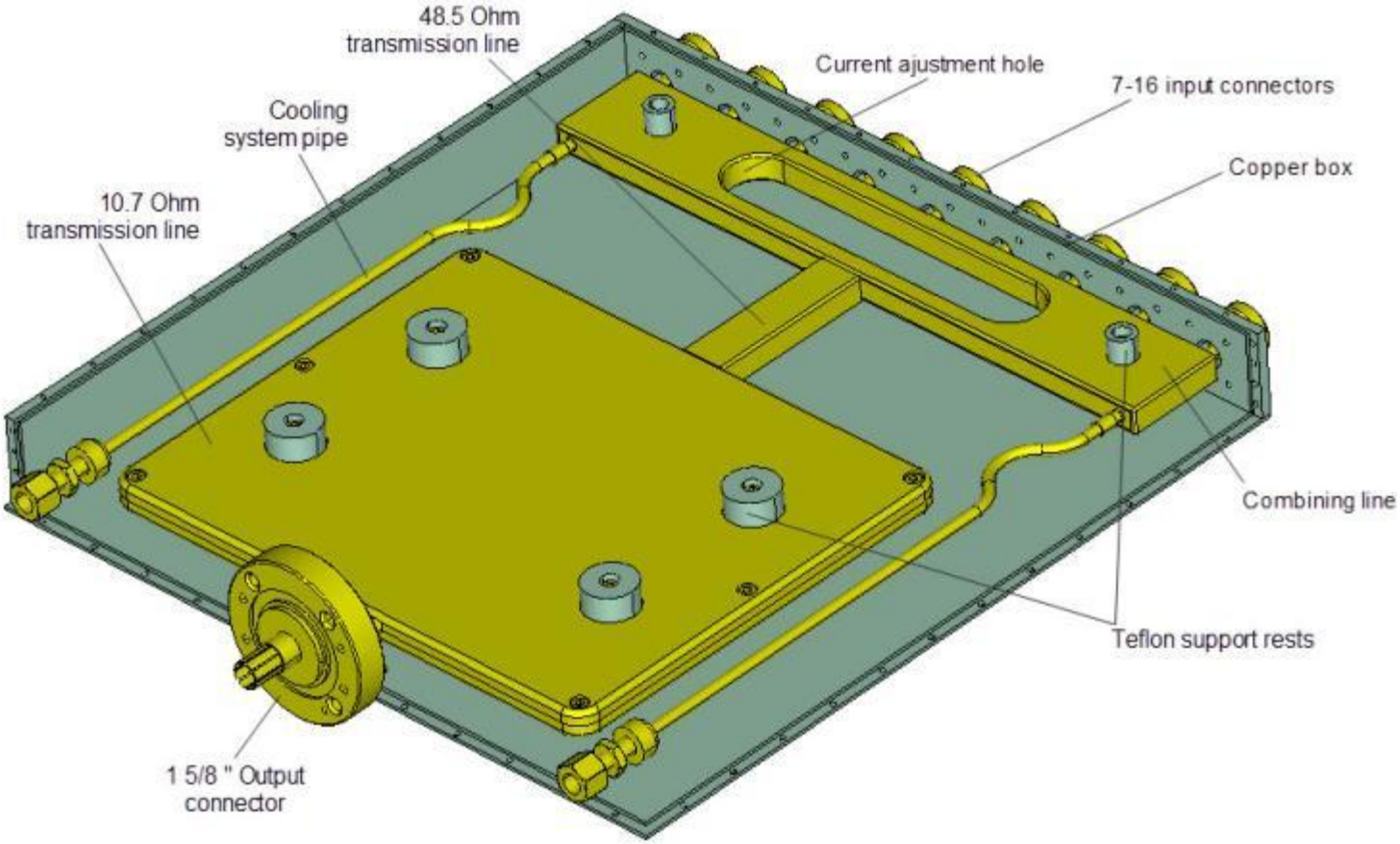

Box size:

430 x 450 mm

Fits in the 19” rack

Fabricated device

9:1 plane combiner
Results of measurements

SIEMENS

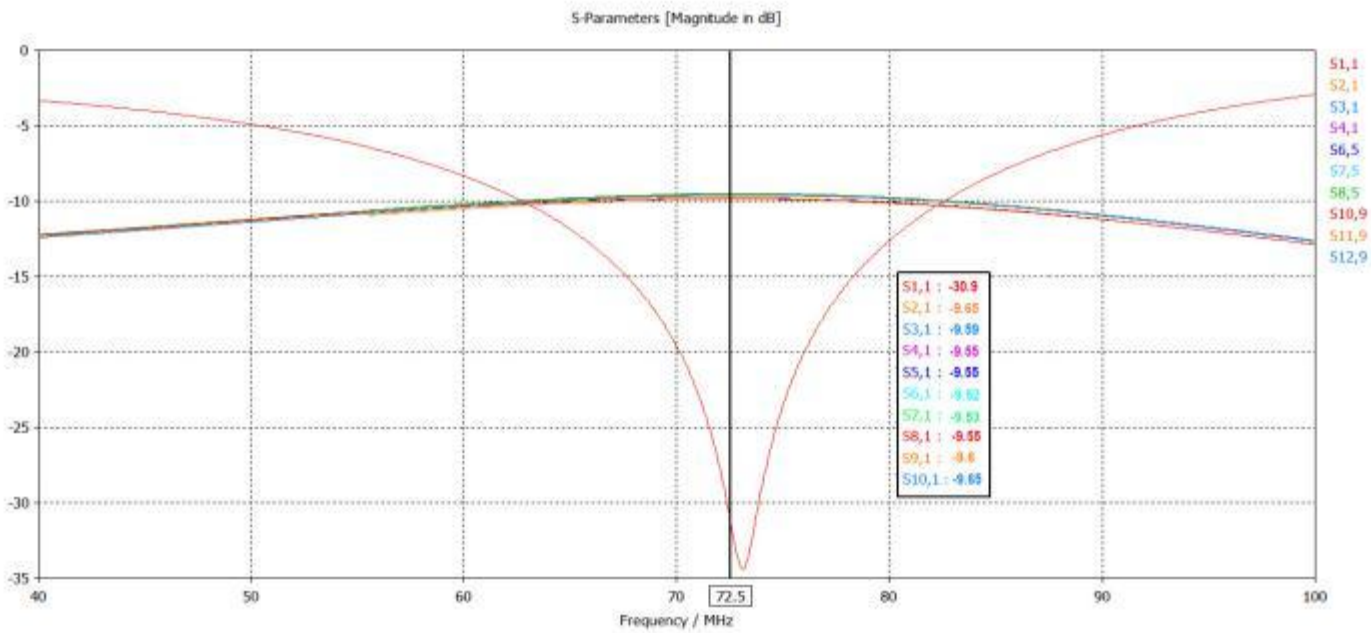

Scattering matrix coefficients

	CST	Measurements
Return loss	-40 dB	-30 dB
Power division equality	0.1%	1.0%
Peak surface E-field @ P = 20 kW	4.2 kV/cm	No breakdown occurred at high power tests
Power dissipation	0.1 %	0.5%
Isolation	16 dB	16 dB

Content

SSMG project
Motivation
System architecture

SSMG for cyclotrons
Overview
RF module
Power combiner
➢ Test Results

SSMG for ESS
Overview
RF module
Power combiners
PIN-diodes

Conclusions

SSMG 72,5 MHz 18KW CW Results

SIEMENS

RF module:
Standalone 2.7 kW
55 dB amplifier

9:1 plane power combiner:
Low loss
Compact

	Spec	Results
Frequency of operation	72-73 MHz	72-73 MHz
Output power	16 kW	18 kW
Efficiency	50%	75%
Class of operation	AB	AB
Resonance search	External control	Onboard
Resonance hold	External control	Onboard

Benefits for cyclotron applications

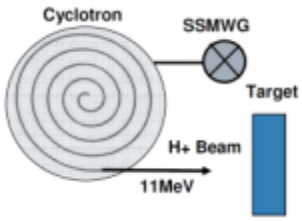

- **Increased power (~25 kW)**
- **Rugged design (long MTBF)**
- **Air cooling sufficient**
- **Customized designs**

- **PET**
- **Proton therapy**
- **MRI**
- **Industrial**

Evolution

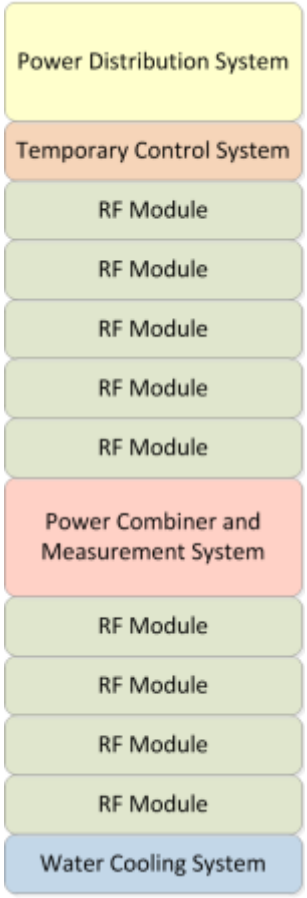

30U Total ~ 1.4 m

Points for development

- **Use of developed Control System (3U)**
- **Put all power amplifiers to one 4U rack (current design and hardware with minimum modification can be used)**
- **Remove circulators**
- **Implement RF switches and measurement system to combiner (2-3U)**
- **Find power supply (4-6U)**
- **System fits into 15-18U of height**

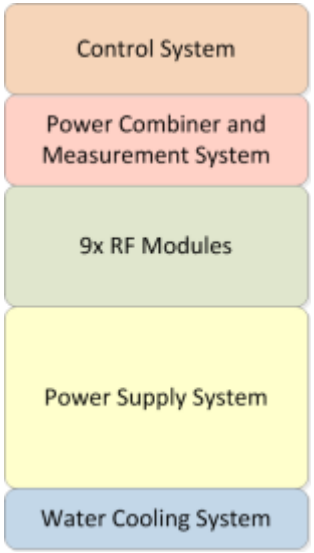

18U Max ~ 0.8 m

Content

SSMG project
Motivation
System architecture

SSMG for cyclotrons
Overview
RF module
Power combiner
Test Results

SSMG for ESS
➢ Overview
RF module
Power combiners
PIN-diodes

Conclusions

European Spallation Source

Schematic of ESS Linac

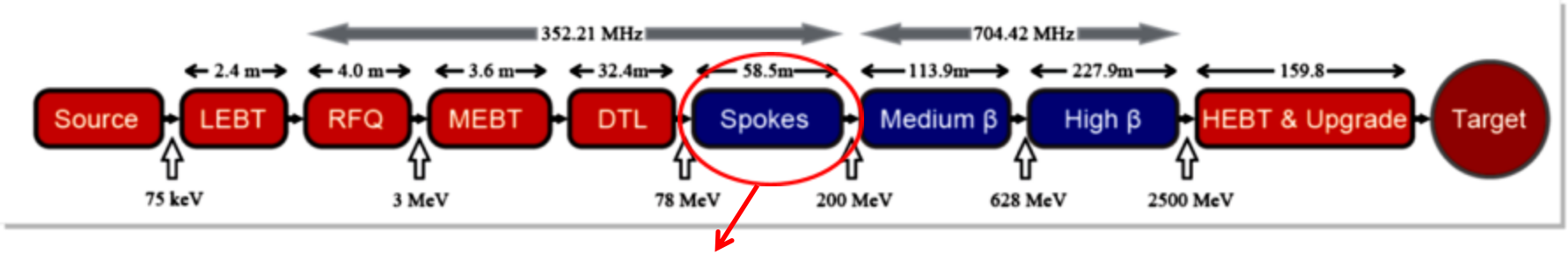

Specification	Value
Frequency of operation	352.21 MHz
Output power	≥ 400 kW
Pulse width	3.5 ms
Frequency of pulses	14 Hz
Class of operation	AB
Linearity	± 0.5 dB between 40 kW and 400 kW
Gain amplitude stability	± 1 dB
Gain phase stability	± 5°

Superconducting Spoke Linac

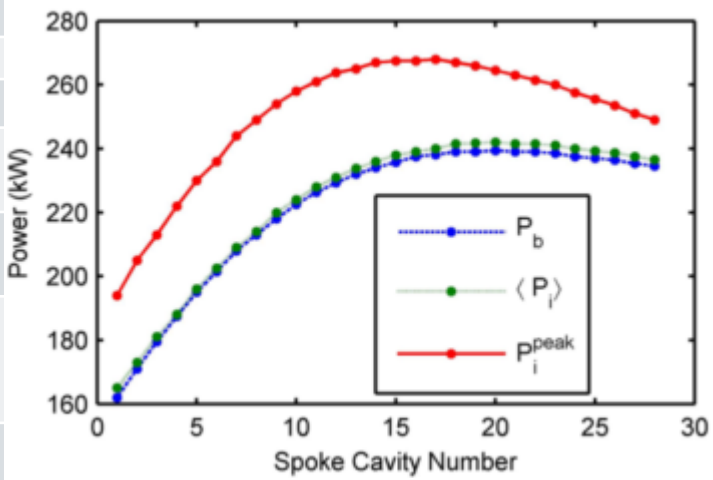

Frequency = 352.21 MHz
Number of spoke resonators = 28
Maximum power to beam = 320 kW
Maximum Amplifier = 400 kW

COURTESY Yogi Rutambhara

SSMG for ESS
The most powerful SSPA to date!

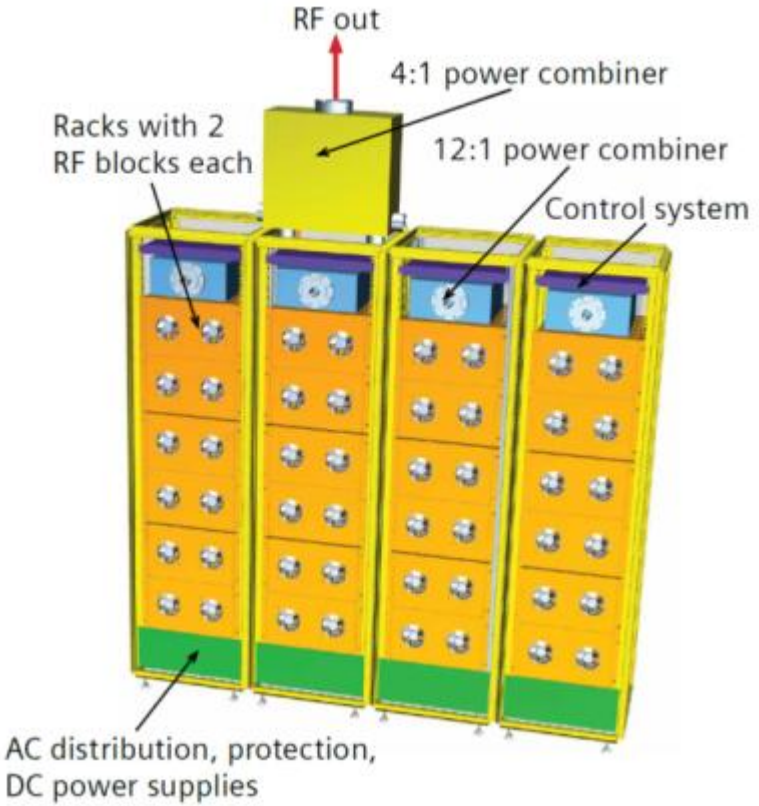

RF modules
6x 8.4kW

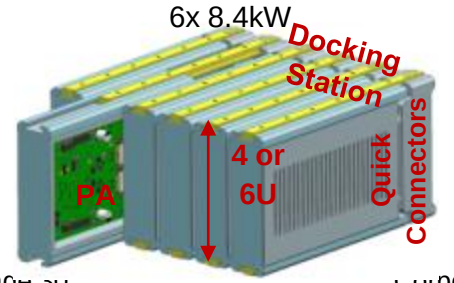

Capacitor block

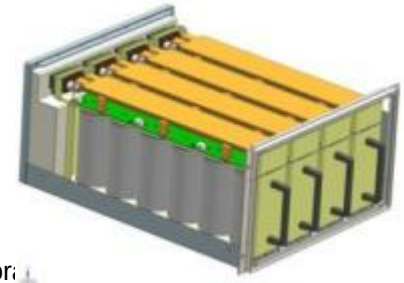

Design:

- 4x 19'' cabinets
- 48x 8kW RF modules
- Docking stations with quick connectors
- 8x capacitor blocks
- 4x 12:1 power combiners
- 4:1 final power combiner

Features:

- Total efficiency: >60%
- Footprint: ~2 m^2
- MTBF: > 100 000h
- MTTR: <15 min
- LLRF, controls, cooling, 50V DC PS onboard

Content

SSMG project
Motivation
System architecture

SSMG for cyclotrons
Overview
RF module
Power combiner
Test Results

SSMG for ESS
Overview
➢ RF module
Power combiners
PIN-diodes

Conclusions

RF PA module 352 MHz – 8 kW
Prove of concept

SIEMENS

Assembled 352MHz RFPA

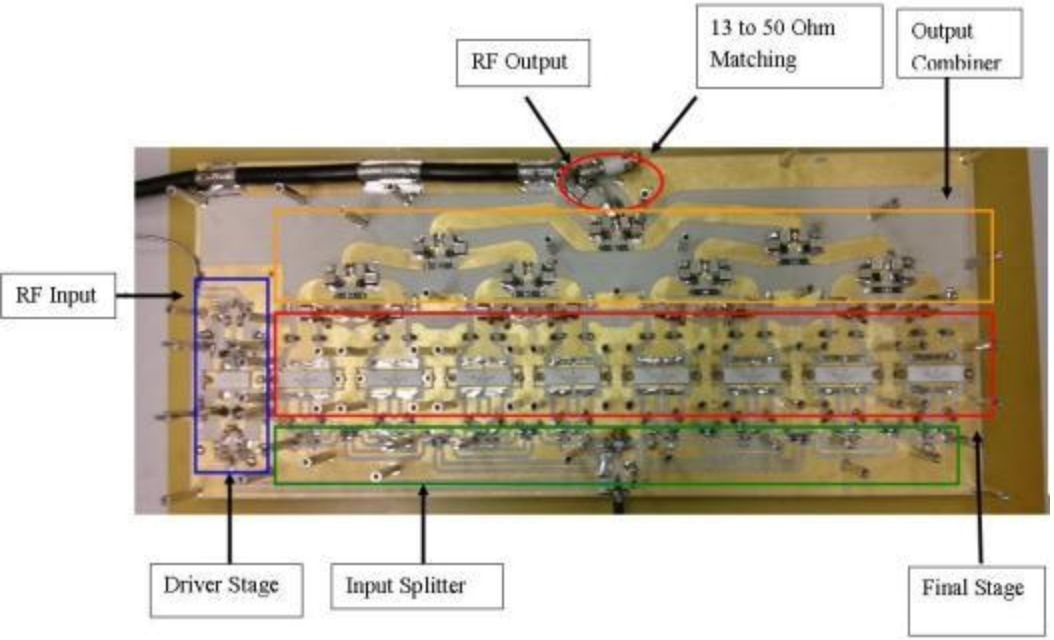

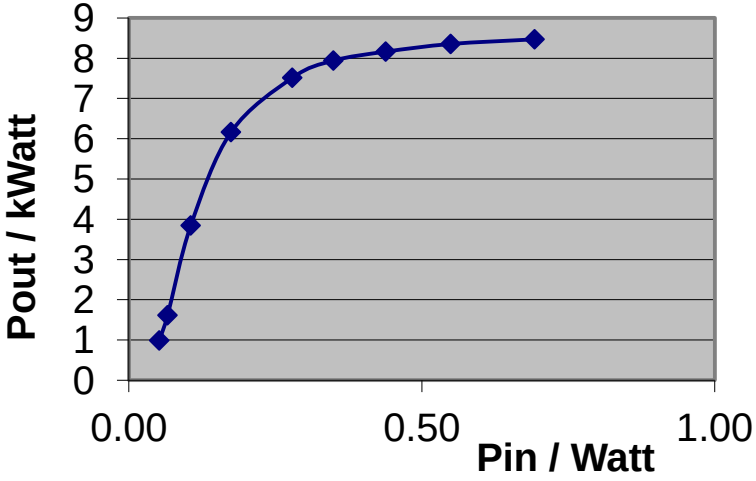

Vds=50V, Pulse length=4ms, Duty Cycle 5%

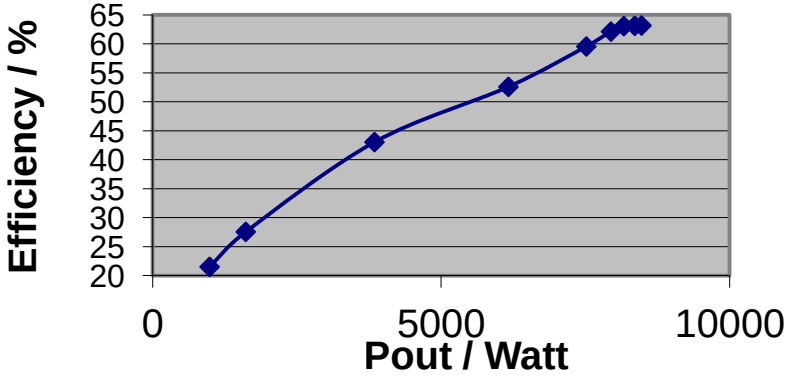

Output Power

Vds=50V, Pulse length=4ms, Duty Cycle 5%

352 MHz 8.4 kW RFPA

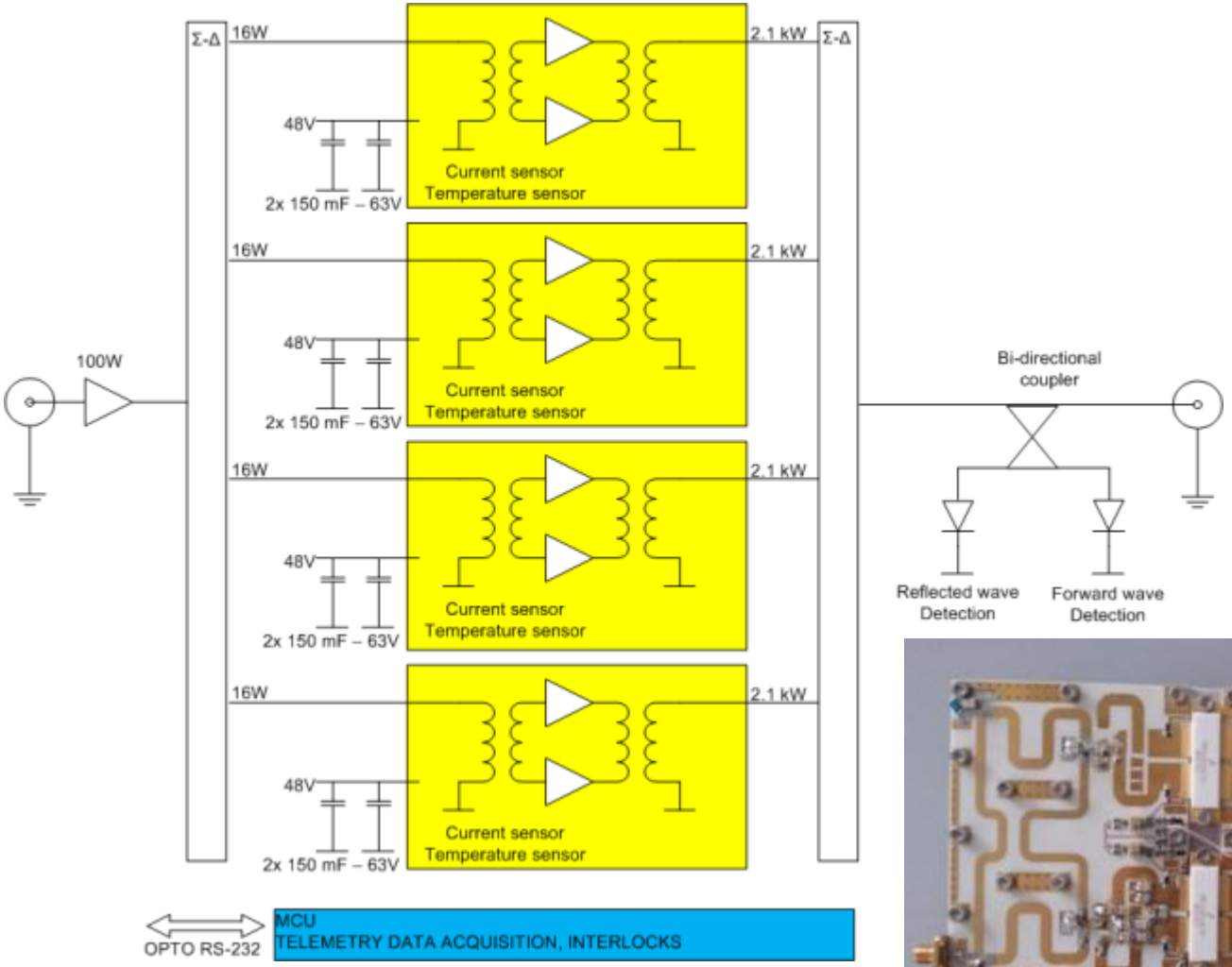

Features:

- 4x 2.1 kW pallets
- Pallet: predrivers, final stage, matching, combiner
- Fits into 6U
- Water cooled
- Quick connectors

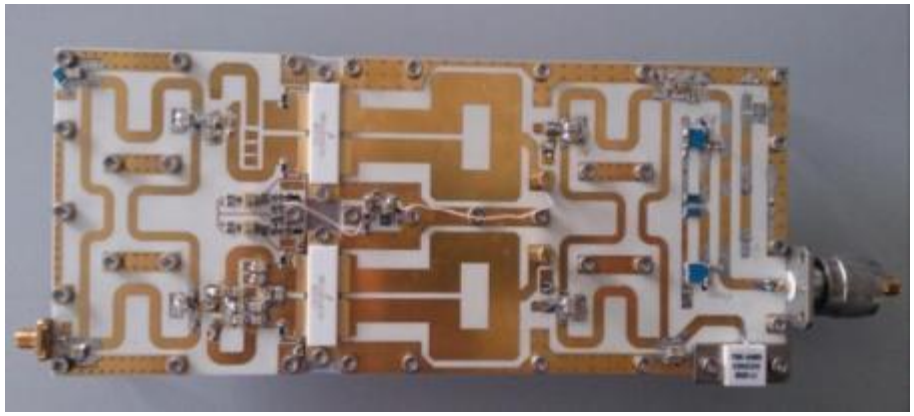

Content

SSMG project
Motivation
System architecture

SSMG for cyclotrons
Overview
RF module
Power combiner
Test Results

SSMG for ESS
Overview
RF module
➢ Power combiners
PIN-diodes

Conclusions

352 MHz RF Power Combining Scheme

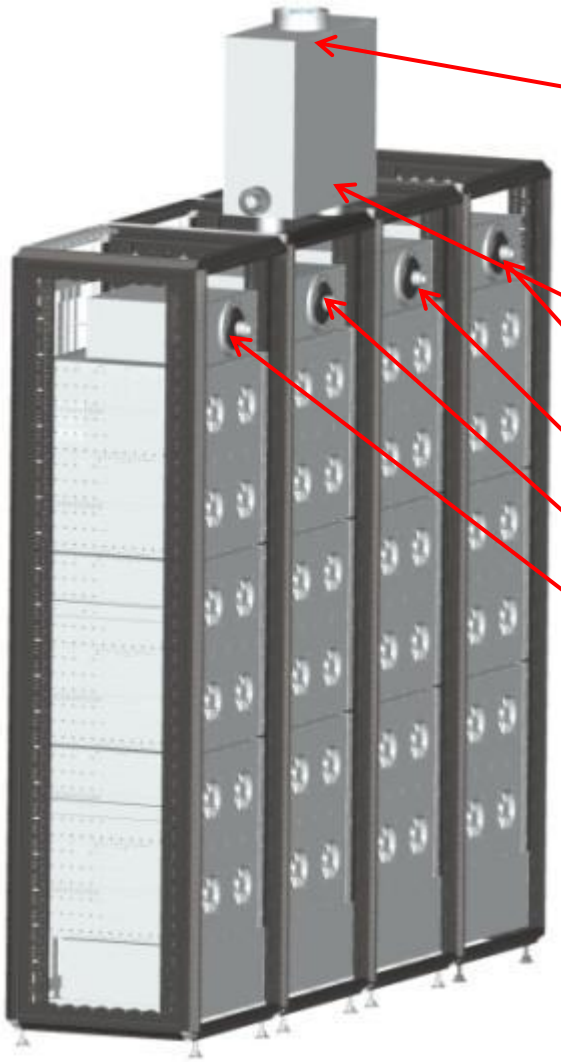

Directional Coupler

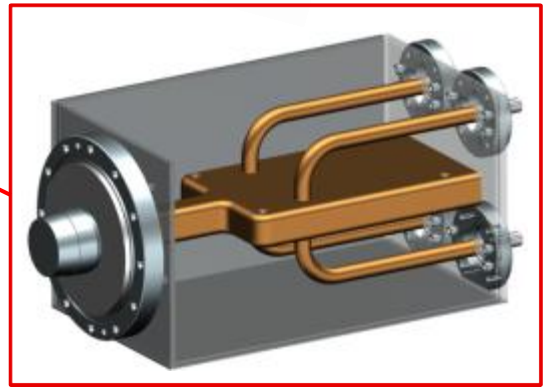

4-1 Power Combiner

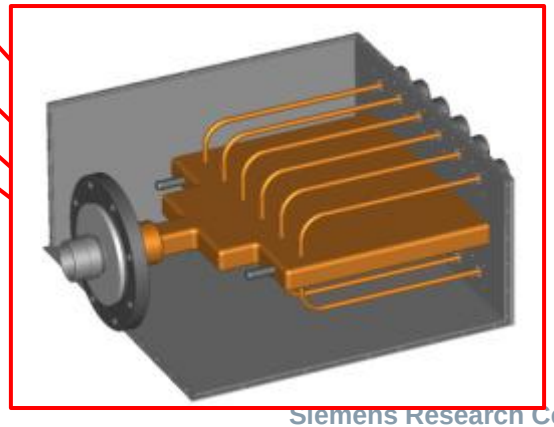

12-1 Power Combiner

Previous 352 MHz 12-1 Power Combiner

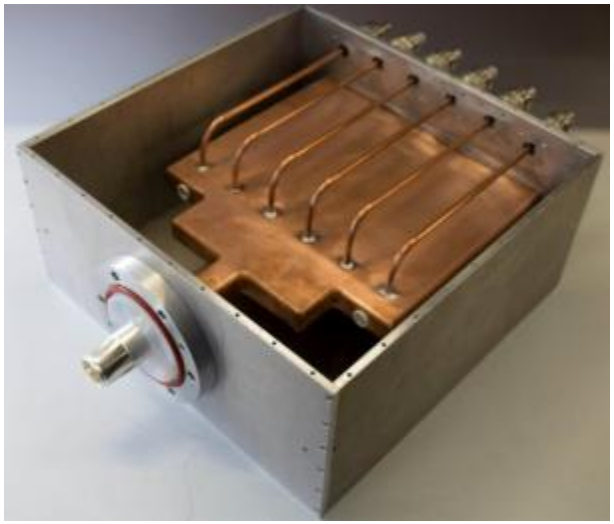

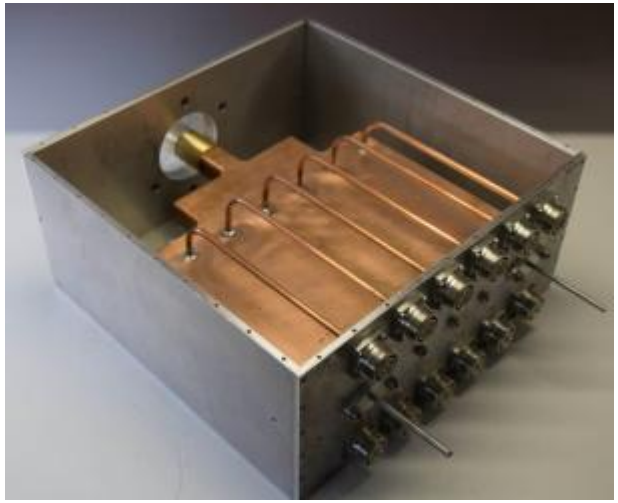

Parameter	Measured Value
Dimensions	40×40×20 cm^3
1dB level Bandwidth	25 MHz
Return loss	>30 dB within 1 MHz BW 35 dB@ 352.21 MHz
Power division equality	1.3%
Peak surface E-field	to be measured at high power tests
Input power dissipation	0.48%
Isolation	>19 dB

352 MHz 4-1 Power Combiner

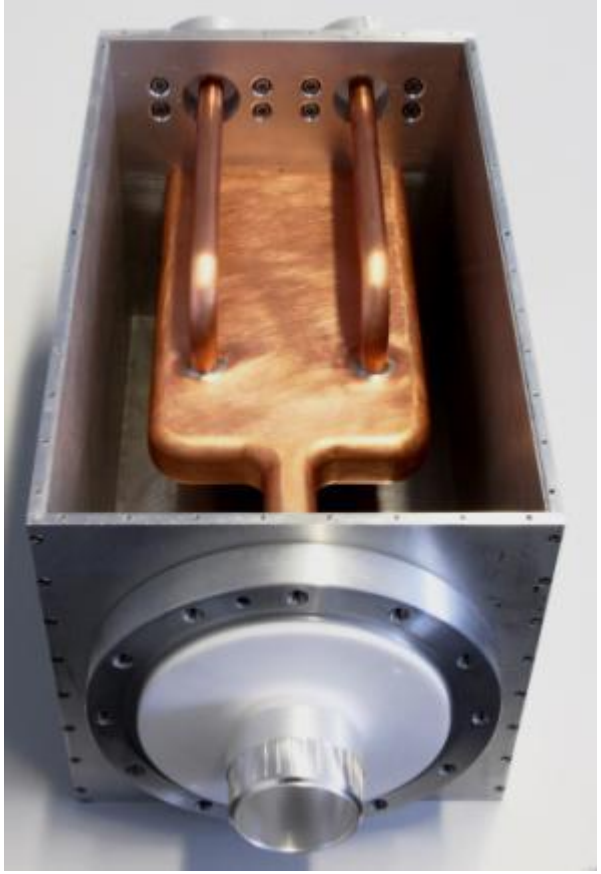

Parameter	Measured Value
Dimensions	44×24×23 cm^3
1dB level Bandwidth	15 MHz
Return loss	>29 dB within 1 MHz-BW 36 dB@ 352.21 MHz
Power division equality	+0.98%…-1.1%
Peak surface E-field	to be measured at high power tests
Input power dissipation	0.8%
Isolation	>11.6 dB

352 MHz Bi-Directional Coupler

Parameter	Measured Value
Coupling, dB	65-68
Directivity, dB	39
Return Loss @ 352,21 MHz, dB	-64
Loss, %	<0.01

Content

SSMG project
Motivation
System architecture

SSMG for cyclotrons
Overview
RF module
Power combiner
Test Results

SSMG for ESS
Overview
RF module
Power combiners
➢ PIN-diodes

Conclusions

RF switch specification

RF requirements

- Operating frequency – 352 MHz
- Operating mode – 3.5ms pulse length, 5% duty cycle
- Power in a pulse – 8.5 kW
- Short circuit providing for inputs of power combiner
- High level of isolation (off state) and low level of reflection (on state)
- Low level of insertion losses

Mechanical requirements

- PIN diode should be placed beside the power combiner
- RF power and DC bias should be transmitted through same coaxial cable
- Compact design
- Supplying from general DC voltage – 50V

PIN-diode control module

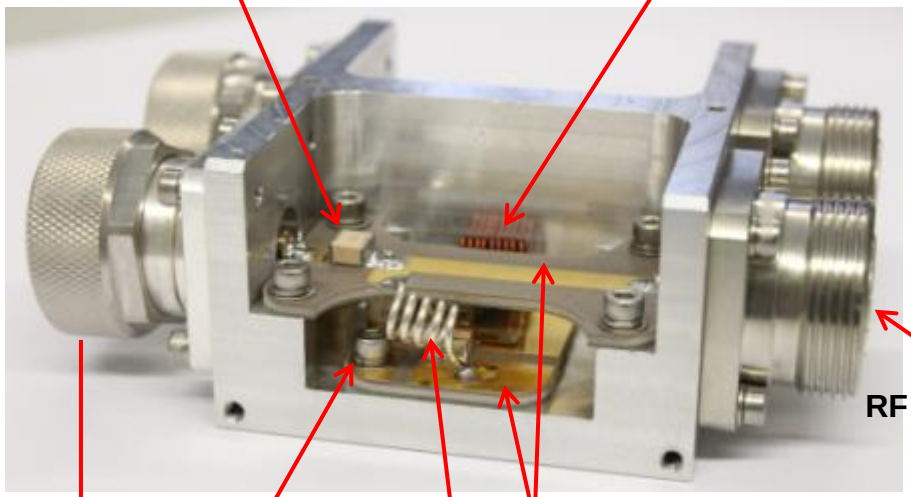

Basic electrical parameters

- Output voltage – 1000±5V
- Voltage ripple – 0.15%
- Output current – 1±0.06A
- Current ripple – 0.4%
- Efficiency - ~60%

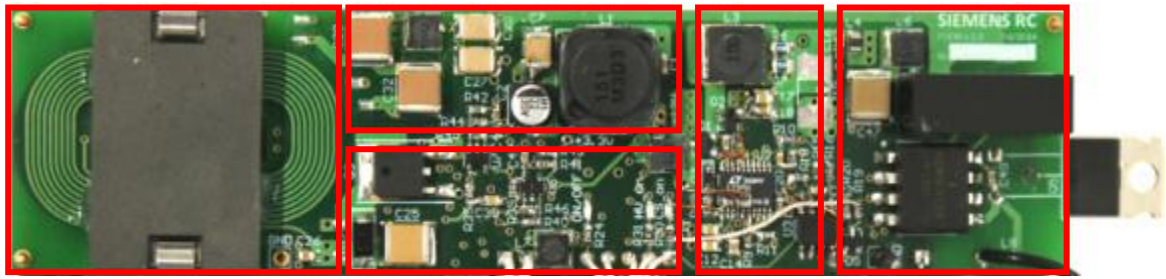

Switching parameters and RF tests

Switching parameters

On state" to "Off state" switching time: < 10 µs

Off state" to "On state" switching time: < 2.5 ms

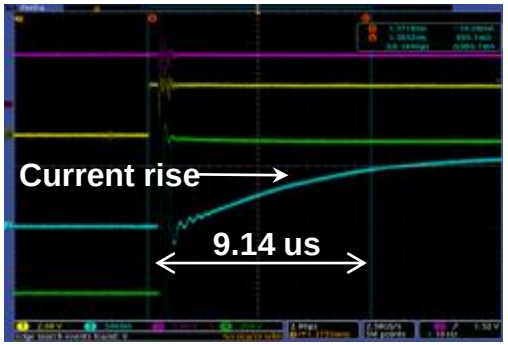

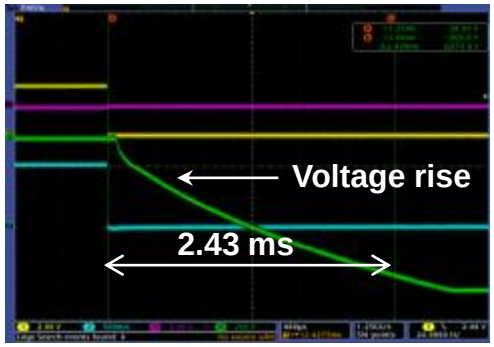

RF tests

Scheme of experiment

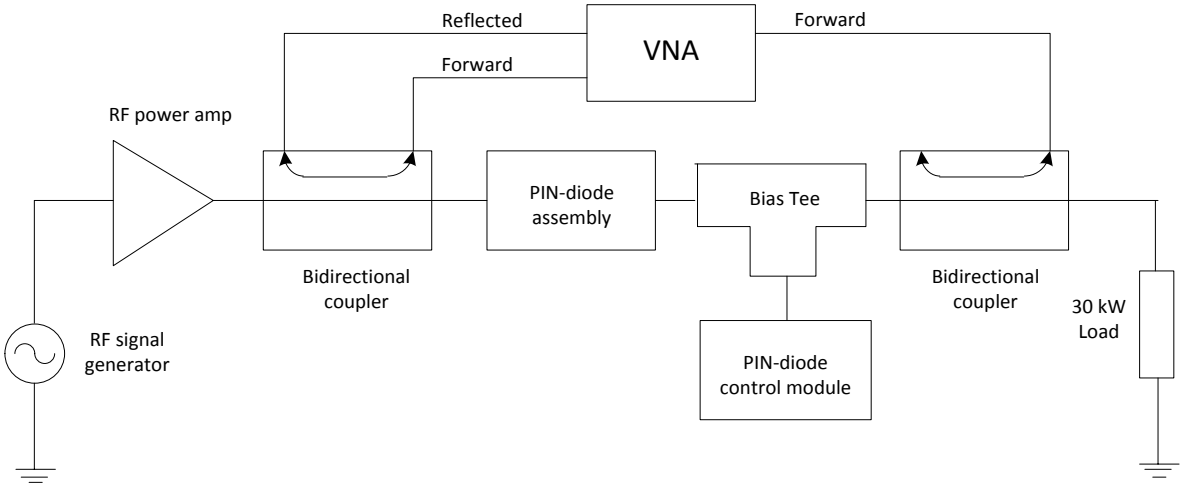

Test conditions:

- **Test frequency – 72.5 MHz**
- **Test power – 8.5 kW**
- **Pulse length – 3.5ms**

Results

ON state:

- **Return loss: -39 dB**
- **Internal loss: 0.4%**

OFF state:

- **Isolation: -44 dB**
- **Insertion loss: 2.5%**

Conclusions

Unified architecture for various applications developed

- High modularity and scalability
- Reduced costs and development efforts
- Use off-the-shelf components as much as possible
- No handmade parts/tuning
- All components fit into standard 19“ cabinet

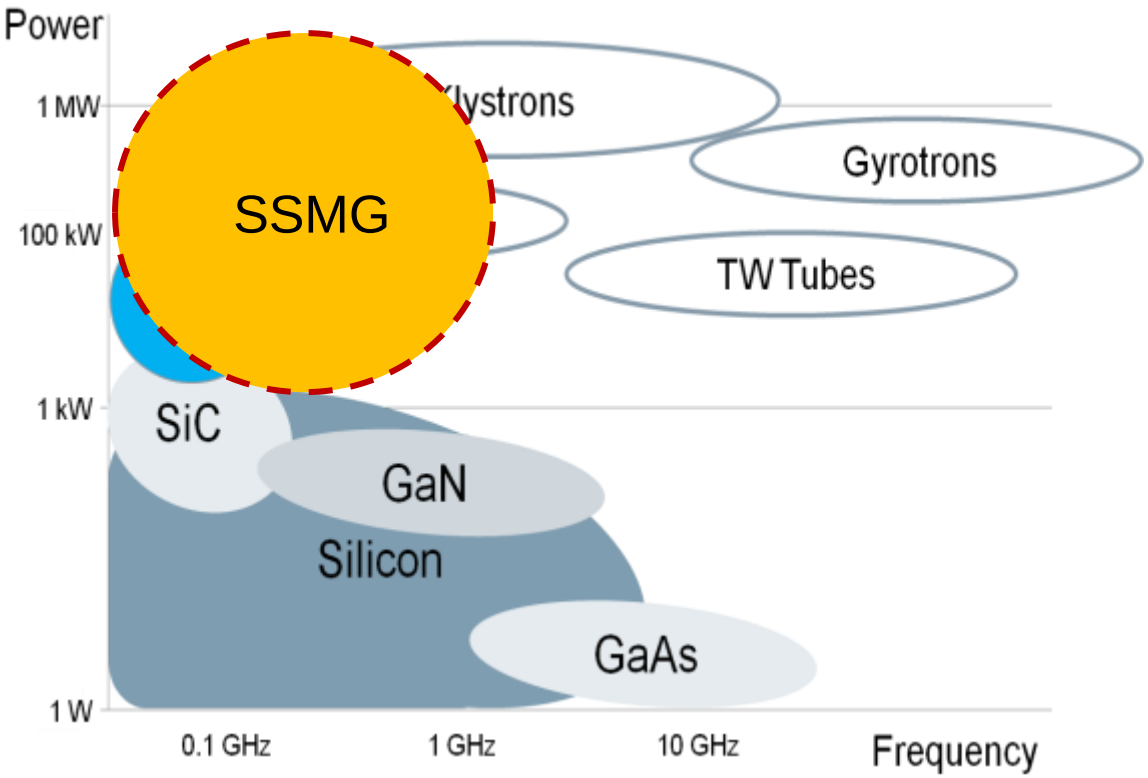

SIEMENS

Solid-State Microwave Generator

Thank you!

See you on IPAC14 and LINAC14!