Japan Contribution to the HL-LHC

Tatsushi NAKAMOTO
KEK

Engagement to the HiLumi-LHC Desgin Study

High Luminosity LHC Project

PROJECT COORDINATION OFFICE

Project Coordinator: Lucio Rossi, CERN
Deputy Project Coordinator: Oliver Brüning, CERN
Technical Coordinator: Isabel Bejar Alonso, CERN
Project Safety Officer: Thomas Otto, CERN
Budget & Resource Management: Dorothée Duret, CERN
FP7 HiLumi LHC Administrative Manager: Svetlomir Stavrev, CERN
Dissemination & Outreach: Agnes Szeberenyi, CERN
Administrative Support: Cécile Noels & Julia Double, CERN

WP
Coordinator
Co-coordinator

FP7 HiLumi LHC Design Study

WP1 Project Management
Lucio Rossi, CERN
Oliver Brüning, CERN

WP2 Accelerator Physics
Gianluigi Arduini, CERN
Andy Wolski, UNILIV

WP3 Magnets
Ezio Todesco, CERN
GianLuca Sabbi, LBNL

WP4 CC and RF
Erk Jensen, CERN
Graeme Burt, ULANC

WP5 Collimation
Stefano Redaelli, CERN
Robert Appleby, UNIMAN

WP6 Cold Powering
Amalia Ballarino, CERN
Francesco Broggi, INFN

WP7 Machine Protection
Daniel Wollmann, CERN
Jorg Wenninger, CERN

WP8 LHC-Exp. Interface
H. Burkhardt, I. Efthymiopoulos, CERN,
A. Ball (CMS), B. Di Girolamo, (ATLAS)

WP9 Cryogenics
Serge Claudet, CERN
Rob Van Weelderen, CERN

WP10 Energy depo.
Francesco Cerutti, CERN
Nikolai Mokhov, FNAL

WP11 11T Dipole
Mikko Karppinen, CERN
Alexander Zlobin, FNAL

WP12 Vacuum
Roberto Kersevan, CERN
Mark-Antony Gallilee, CERN

WP13 Beam Diagnostics
Rhodri Jones, CERN
Hermann Schmickler, CERN

WP14 Beam Transfer
Jan Uythoven, CERN
Brennan Goddard, CERN

WP15 Integration
Sylvain Weisz, CERN
Paolo Fessia, CERN

WP16 Hardware Commissioning
Mirko Pojer, CERN

WP18 High Field Magnets
Gijs de Rijk, CERN
François Kircher, CEA

R&D and Study

Participation from KEK

A visiting scientist from KEK to CERN

Another contribution to the LIU: PSB RF and PS damper

Possible Contribution to the HL-LHC (Plan)

- In-kind contribution
  - 6 full-scale D1 beam separation magnets assembled in cryostats for the new insertion region.
    - 4 for HL-LHC machine, 2 for spares.
    - All cold masses to be evaluated at warm and cold.
    - Only 1 or 2 full cryostats to be evaluated at cold.

- Accelerator Technology R&D
  - Study on beam related performance limitation
  - Beam diagnostics

- Japanese industry engagement
  - As realized in the present LHC (cold compressor, superconductors, non-magnetic steel, cable insulation, etc.)
  - items and scale depending on the funding

New D1 in IR (ATLAS, CMS)

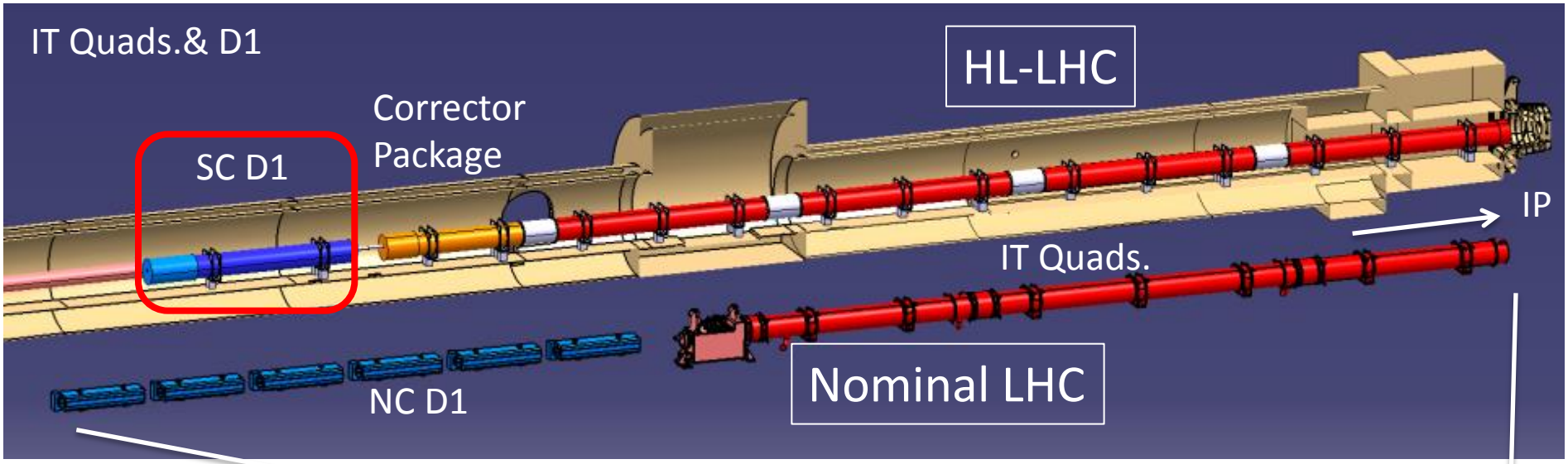

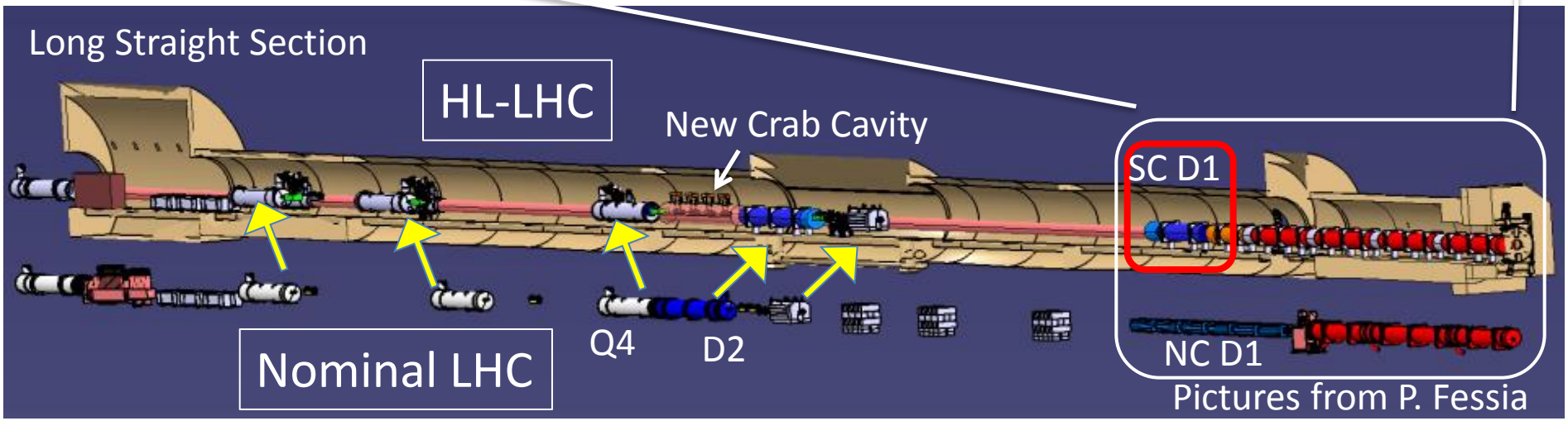

Pictures from P. Fessia

- Short distance btw D1 and D2.
- A large aperture of 150 mm.

→ **NEW D1 SC magnet for HL-LHC**

Latest Design Parameters of D1

- *Coil ID:* ***150 mm***
- *Integrated field:* ***35 T m*** *(26 Tm at present LHC)*
  - *5.59 T at 12 kA, L_{coil}=6.3 m, E= 2.1 MJ*
- *T_{op}:* *1.9 K by HeII cooling*
- *Op. point (2D coil):* *75 %*
- *Coil layout:* *1 layer of 15.1 mm cable*
  - *Better cooling. Saving space for iron yoke.*
- *Conductor:* *Nb-Ti LHC MB outer cable (by CERN)*
- *Structure:* *Collared yoke structure by keying*
  - *RHIC dipole, LHC MQXA, J-PARC SCFM*
  - *Enhancing iron material for stray field issue*
- *Field quality:* *< 10^{-4} at R_{ref} = 50 mm*
- *Cold mass OD:* *550 +10 x 2 = 570 mm*
- *Cryostat OD:* *914 mm, same as MB cryostat*
- *Radiation, energy deposition:*

  20 MGy, ~2 mW/cm³

◆Stress management

◆High saturation, stray field, flux return cryostat

◆Radiation resistance, cooling capability

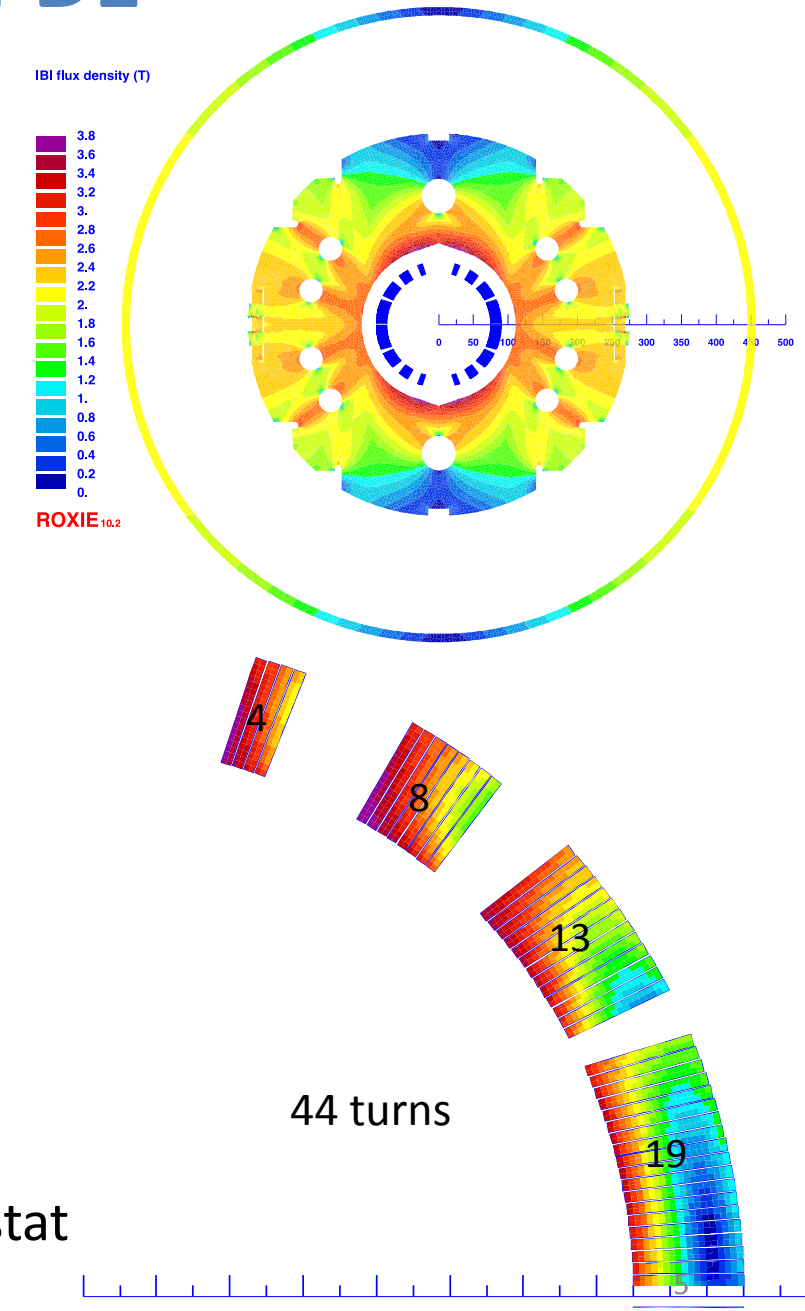

2m-long D1 Model Magnet

Single-layer coil, 4-split spacer collars, collared yoke by keying

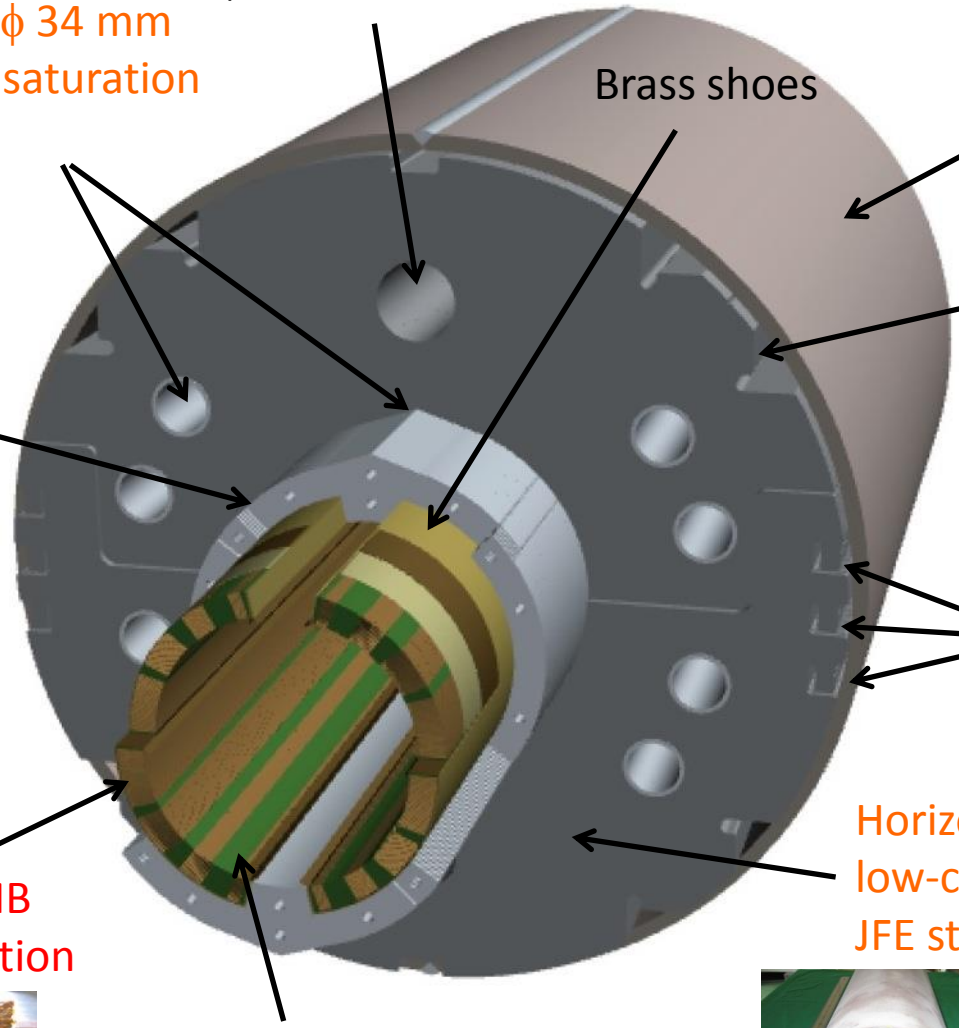

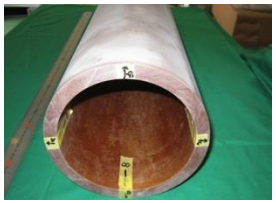

Development of Radiation Resistant GFRP

- Target: 50 MGy or higher (< 20MGy expected in the D1)
- Irradiated in vacuum at RT, evaluated at RT.

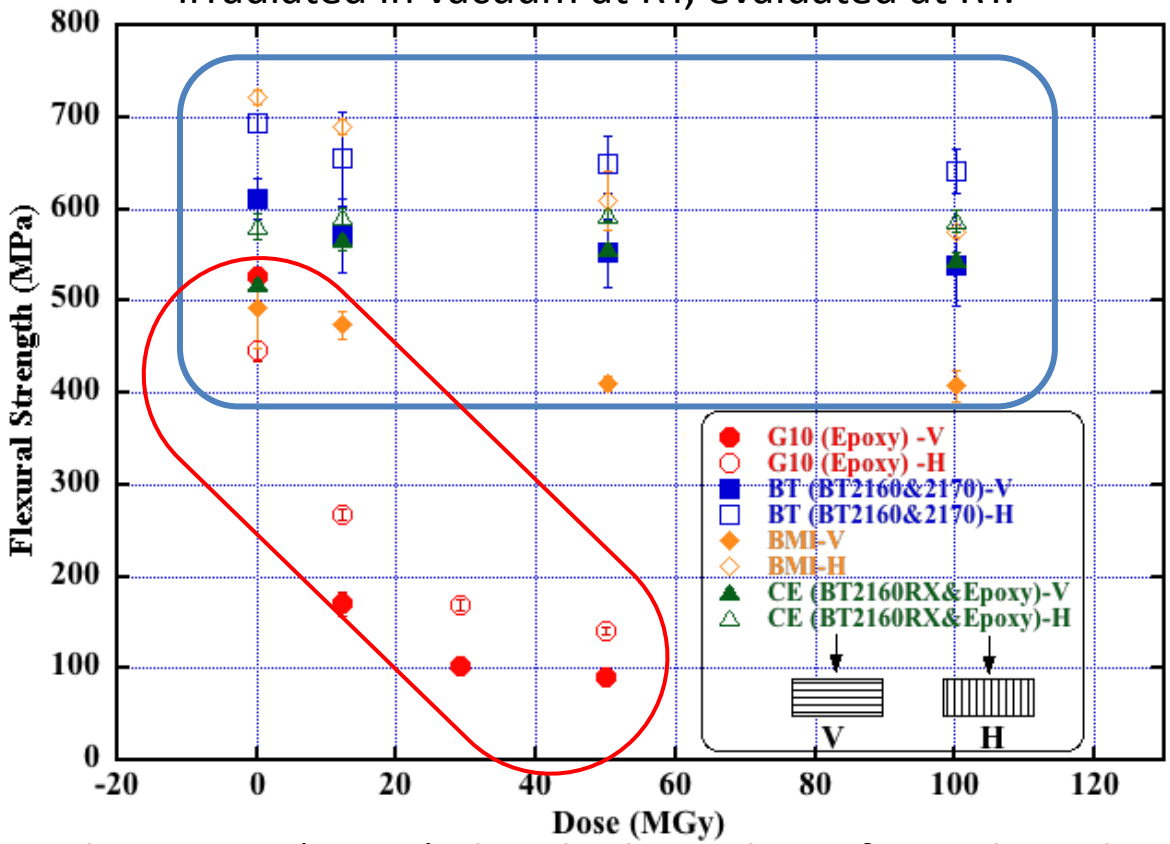

New GFRP Pipe (S2 glass & BT resin)

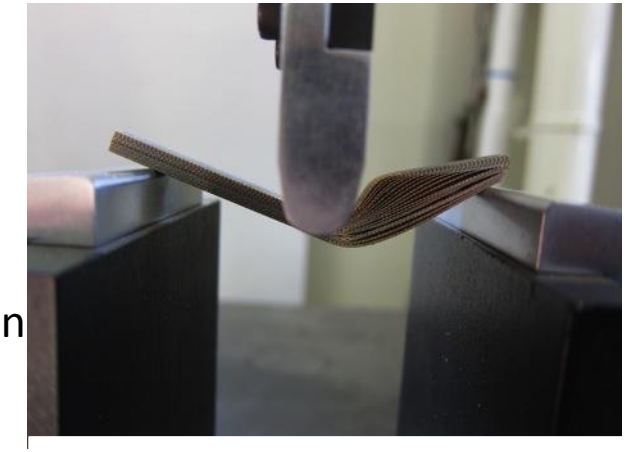

Flexural strength test（G10, 30MGy）

- Ordinary G10 (Epoxy) already showed significant degradation even at 10 MGy.
- New GFRPs (CE&Epoxy, BT, and BMI) show good radiation resistance up to **100 MGy**.

GFRP (S2 glass & BT resin) will be adopted for the new D1

Design Tools

Parameters, specification given by CERN (beam, radiation, cooling analysis)

- EM Design
  - ROXIE, OPERA(for benchmarking in 2D and 3D)

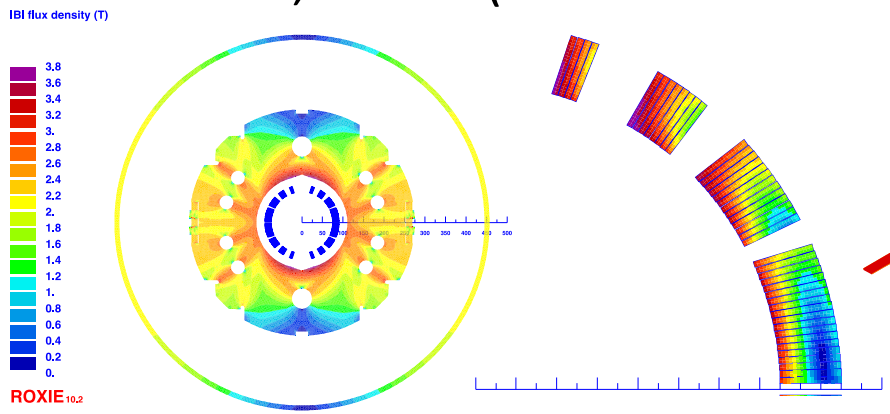

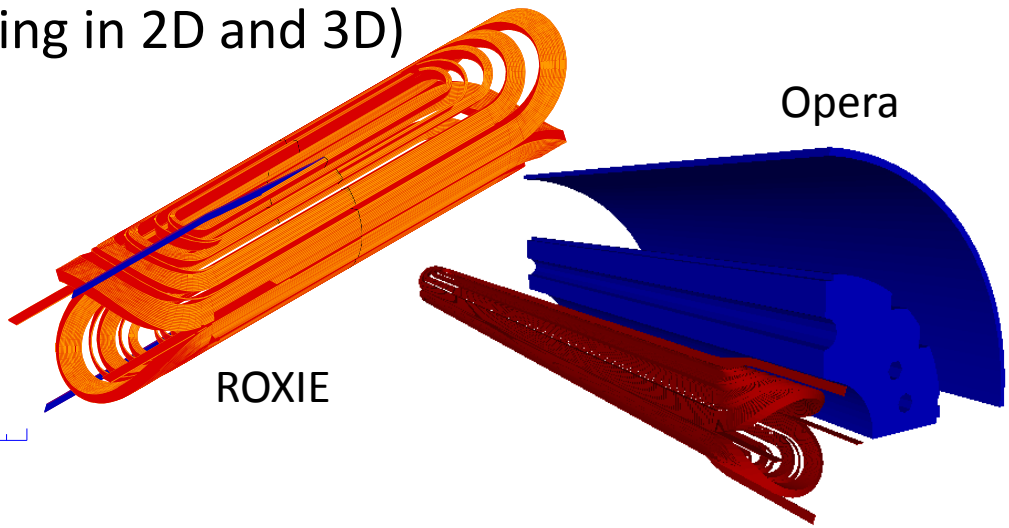

- Structural Analysis
  - ANSYS

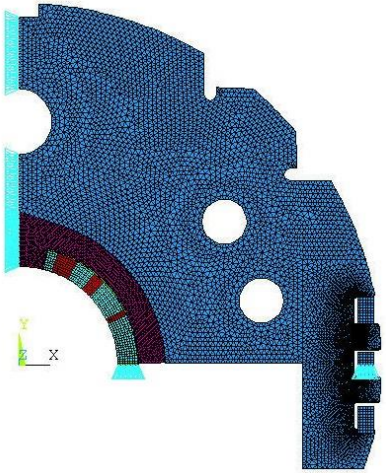

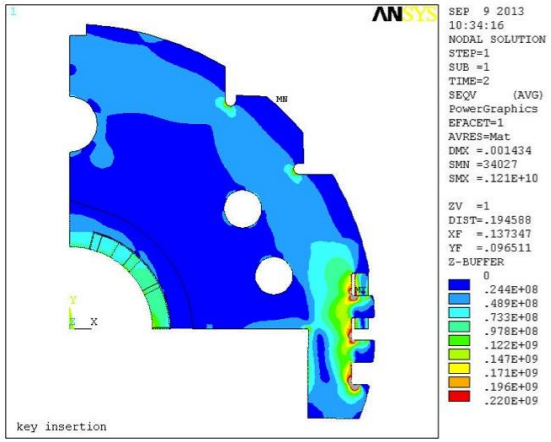

- Quench Analysis
  - Original code in KEK

Design Tools

- Engineering
  - Preparatory work: bridge between ROXIE output (.catia, .cnc) and CAD/CAM modeling
    - MS Excel w/ Visual Basic for Applications
  - 3D CAD/CAM: coils
    - NX7.5 (SIEMENS) for modeling
    - Solid Edge for drawings
  - 2D CAD: drawings for tooling and jig
    - OneSpace Designer (CoCreate)

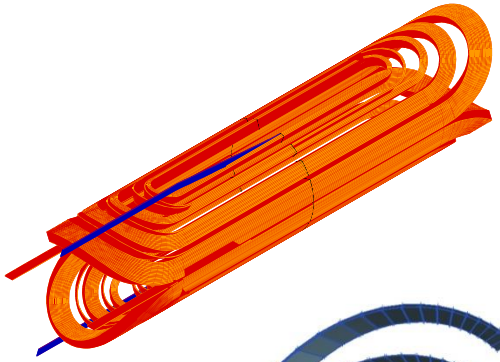

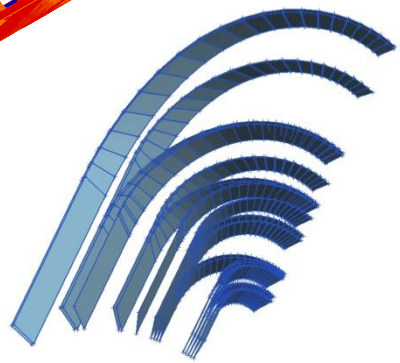

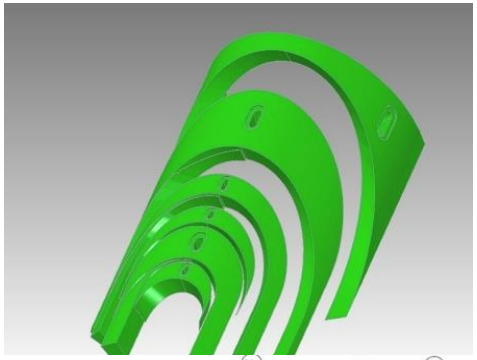

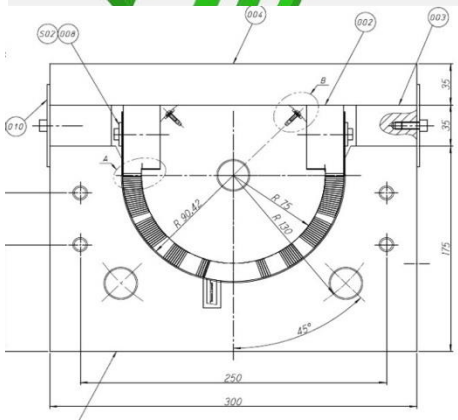

In-kind contribution: D1 magnet w/ cryostat

It should be something like…

MQXA in cryostats

- D1 (MBXF) for the HL-LHC (Plan)
  - Cold mass in cryostat will be delivered by KEK with industry
  - Possible supplies from CERN
    - NbTi SC cables with insulation.
    - Insulated cold bore-tube with tungsten shield
    - HeII internal HX

    } Compatibility with Japanese safety regulation
  - Accessories from Japan
    - Vacuum and pressure vessels
    - Pipe, fitting, ferrule, welding
    - Signal wire

    } Compatibility with CERN's and/or European regulation
    - Alignment target, special feature, etc… In accordance with CERN's guideline

Standard, Code

- **JIS: Japan Industrial Standards**
  - Mostly compatible with other Standards (ISO…), but there are some discrepancies...
  - Japanese products should basically follow JIS.
    - Materials: metals, organic materials
    - Mechanics
    - Electricity

- Code for the D1 in terms of high pressure gas regulation: **"Designated Equipment Inspection Code"**

High Pressure Gas Regulation in Japan

- Fundamental law: **"High Pressure Gas Safety Act"**
  - **KHK** (not KEK…): The High Pressure Gas Safty Institute of Japan.
    - Inspection and certification for the equipment
  - **Local government** (Ibaraki Prefecture for KEK)
    - Approval for the equipment
- KEK MUST follow this Act. Following procedures are foreseen for the D1:
  - 9m-deep vertical cryostat modification: Inspection in progress
  - Horizontal HeII test facility (NEW): Plan
    - The facility: Procedure just once
  - D1 cold mass in cryostat for horizontal testing: Plan
    - Procedure necessary for "***every***" D1 equipment.

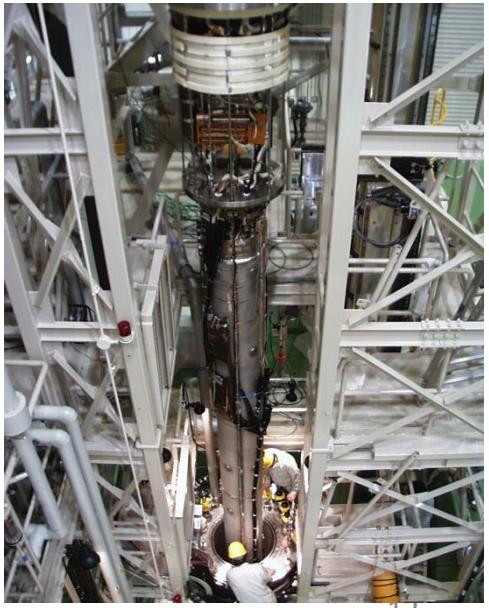

Concern of Horizontal Testing in Japan

- Procedure for the D1 horizontal testing

  *This is NOT for "testing". This is for something like "construction of facility".

  – D1 equipment (cold mass and cryostat) is categorized as **"Designated Equipment"** in **"High Pressure Gas Safety Act"**.

  – Equipment MUST be inspected by **KHK** at the fabrication processes, even from the beginning. If passed, **"Designated Equipment Inspection Certificate"** will be issued.

  – After **"Completion inspection"**, equipment is **approved by local government**.

- Procedure above usually takes quite a long time (e.g. 8 months for a J-PARC SC magnet system).

  – ***Bottleneck of delivery schedule***: serious concern for the D1 horizontal testing.

- If NO horizontal testing in Japan, we can omit the procedure for KHK and local government…

  – Deliverables should be discussed and defined by KEK and CERN

- In any case, the D1 equipment must follow the CERN's and/or European safety regulation.

Lessons from LHC IT: HX buckling

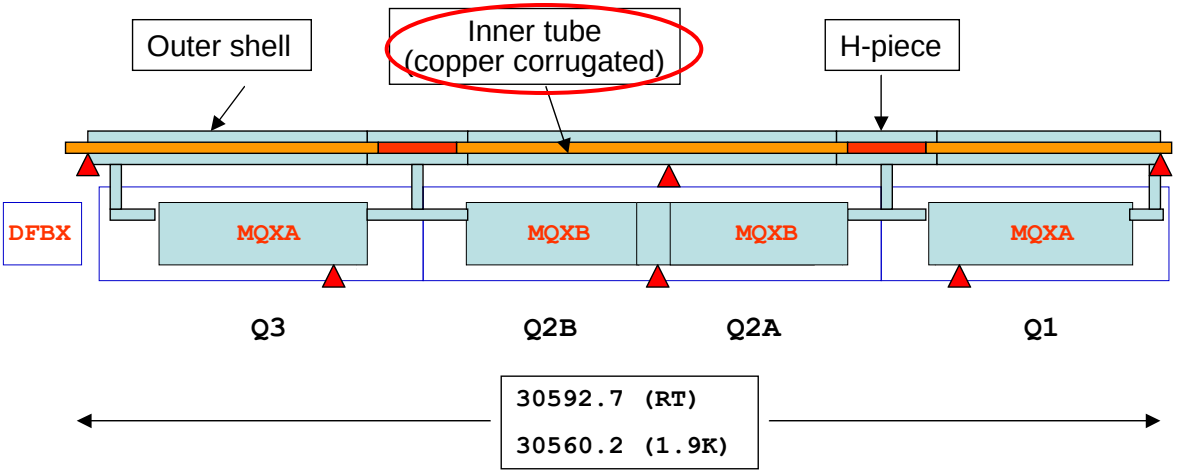

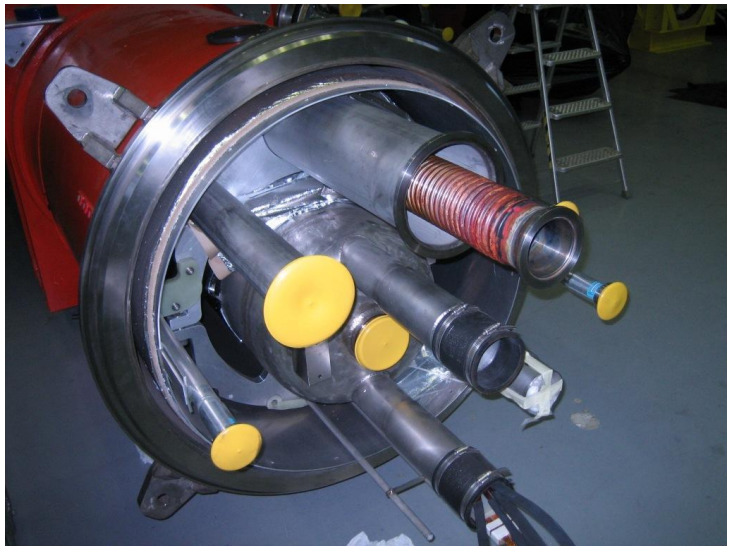

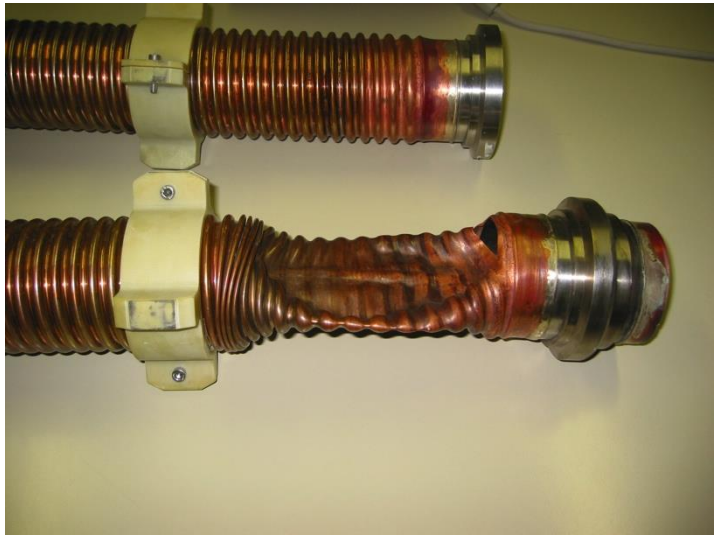

- HX was broken at the pressure test in the LHC tunnel (Dec. 2006).
- Buckling of corrugated copper pipe: annealed by brazing.
- Proper pressure test was not performed before delivery to CERN.

Lessons from LHC IT: Magnet Support Failure

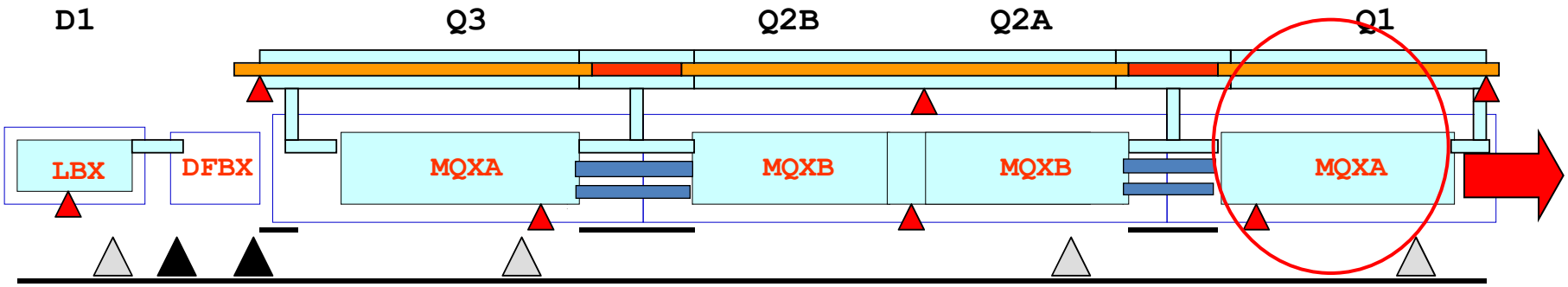

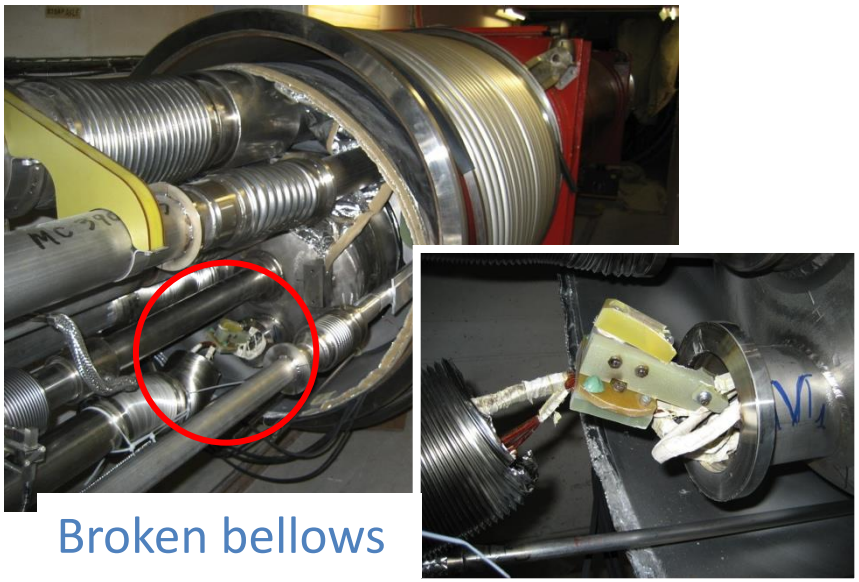

Broken bellows

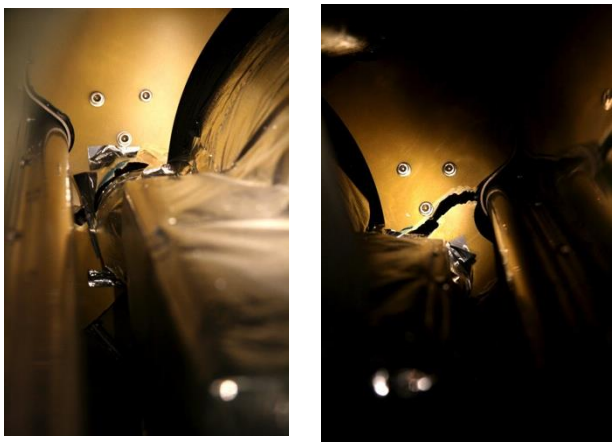

"spider" support

- MQXA was moved by 15 cm at the pressure test in the LHC tunnel. (Mar. 2007)
- Unbalanced force due to the difference of cross sections of pipes was not taken into account for the support design.
- Was specification of the pressure test defined well in the degin/fabrication phase?

Summary

- KEK has been engaged in the HL-LHC design study.
- Possible contribution has been discussed. Major in-kind contribution from Japan will be the D1 magnet system.
- Design study of the D1 is underway.
  - Design tools: ROXIE, OPERA, ANSYS, CAD/CAM
  - Development of 2m long model magnet
- Unique high pressure gas regulation in Japan
  - Difficulty of a series of horizontal testing for the D1
- Close communication and clear specification will be definitely necessary for successful delivery of the HL-LHC equipment as an international collaborative work.