Development of new DAQ system at Super-Kamiokande for nearby supernova

A.Orii

T. Tomura, K. Okumura, M. Shiozawa, M. Nakahata, S. Nakayama, Y. Hayato

for SK collaboration

M. Ikeno, T. Uchida, S. Suzuki, S. Yamada, Y. Obayashi, T. Yokozawa

CHEP@Okinawa

supernova neutrinos

- produced by the core collapse of a massive star
- detailed mechanism of the supernova is not known yet
- once 30-50 years in this galaxy
- total energy: ~3×10^{46}J → 99% neutrino
  - typical neutrino enegy : 20MeV
- possibility of the nearby supernovae was discussed
  - Betelgeuse(640ly~200pc) shrunk 15% in 15years

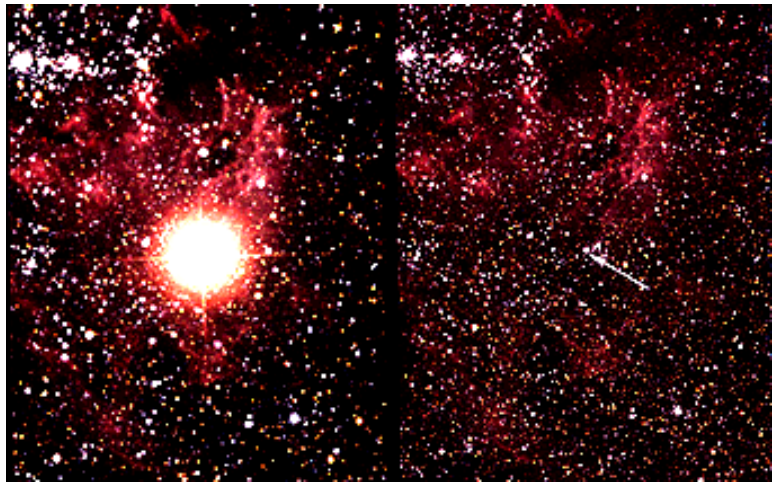

"After" and "Before" pictures of Supernova 1987A at 50kpc

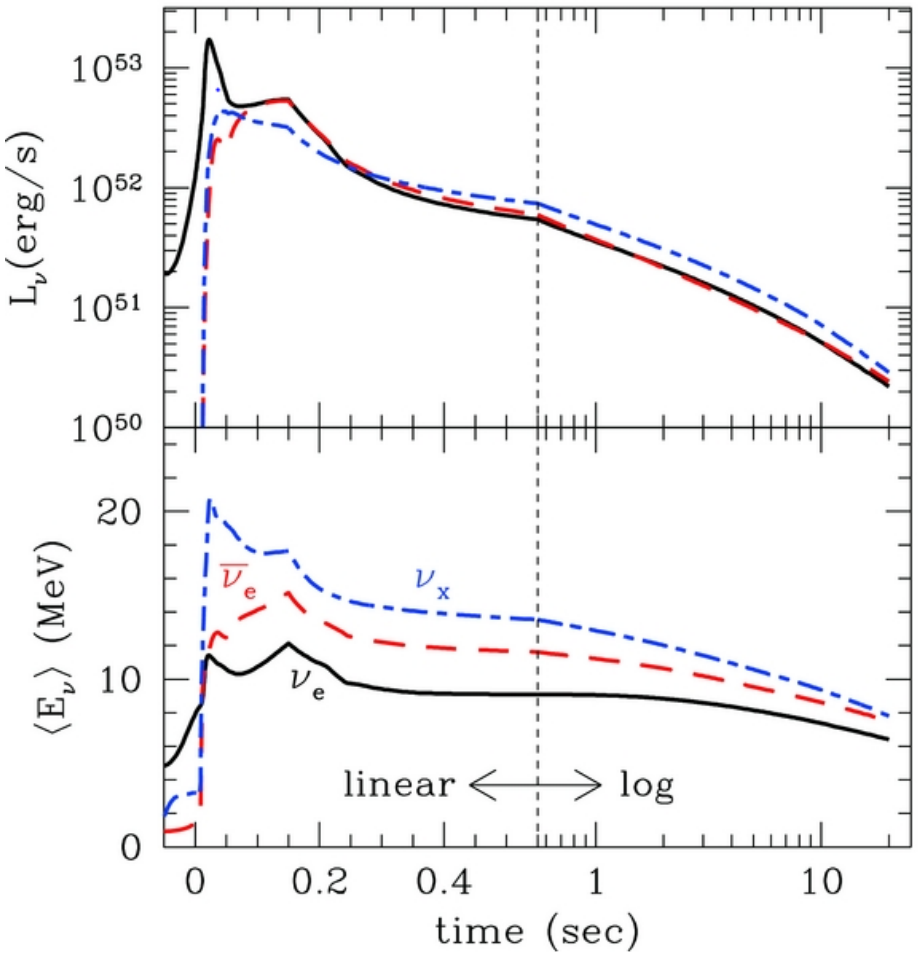

Time evolution of neutrino luminosity and average energy
K. Nakazato et al., Astrophys. J., supplement series, 205:2(17pp),2013

Super-Kamiokande

- ring imaging water Cherenkov detector
  - sensitive volume 32,000 ton
  - PMT 13,000
- low energy threshold(~4MeV)
- reconstruction of neutrino direction and energy
- good detector for supernova burst neutrinos
  - expected about 8000 neutrinos from galaxy center(~10kpc)
- for 500ly supernova $3x10^7$event/10sec expected in SK
- current DAQ can process $6x10^6$event in 10sec ~1kpc supernova

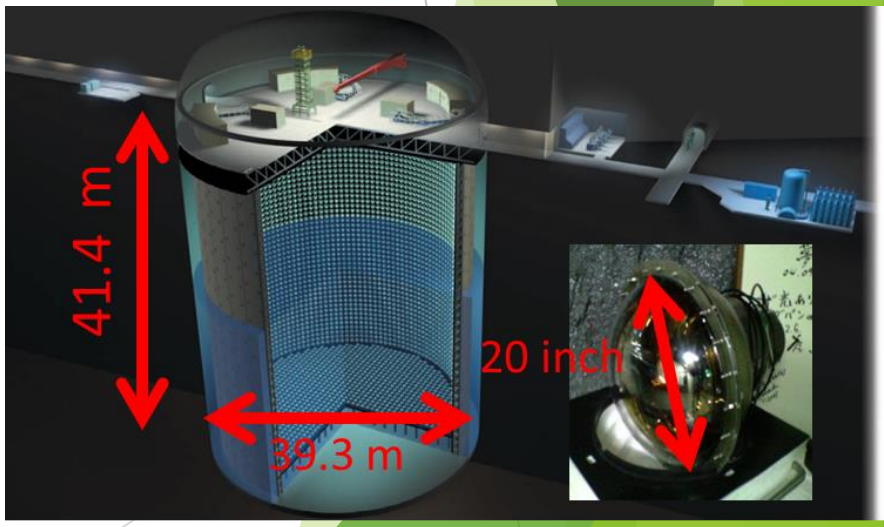

current DAQ

- digitization scheme:
  charge -(QTC)-> time width -(TDC)-> count
- 24PMTs/boards x 480 front-end boards (QBEE)
- all modules synchronize with 60MHz master clock and 60kHz 32bit counter
- read out all charge and timing information
  - threshold ¼ p.e.
  - dark hits ~4kHz/PMT
- front-end computers read out the charge and timing information for all the hits including dark noise(~500MB/s)
- select event by software trigger
- if buffer becomes full, data is discarded

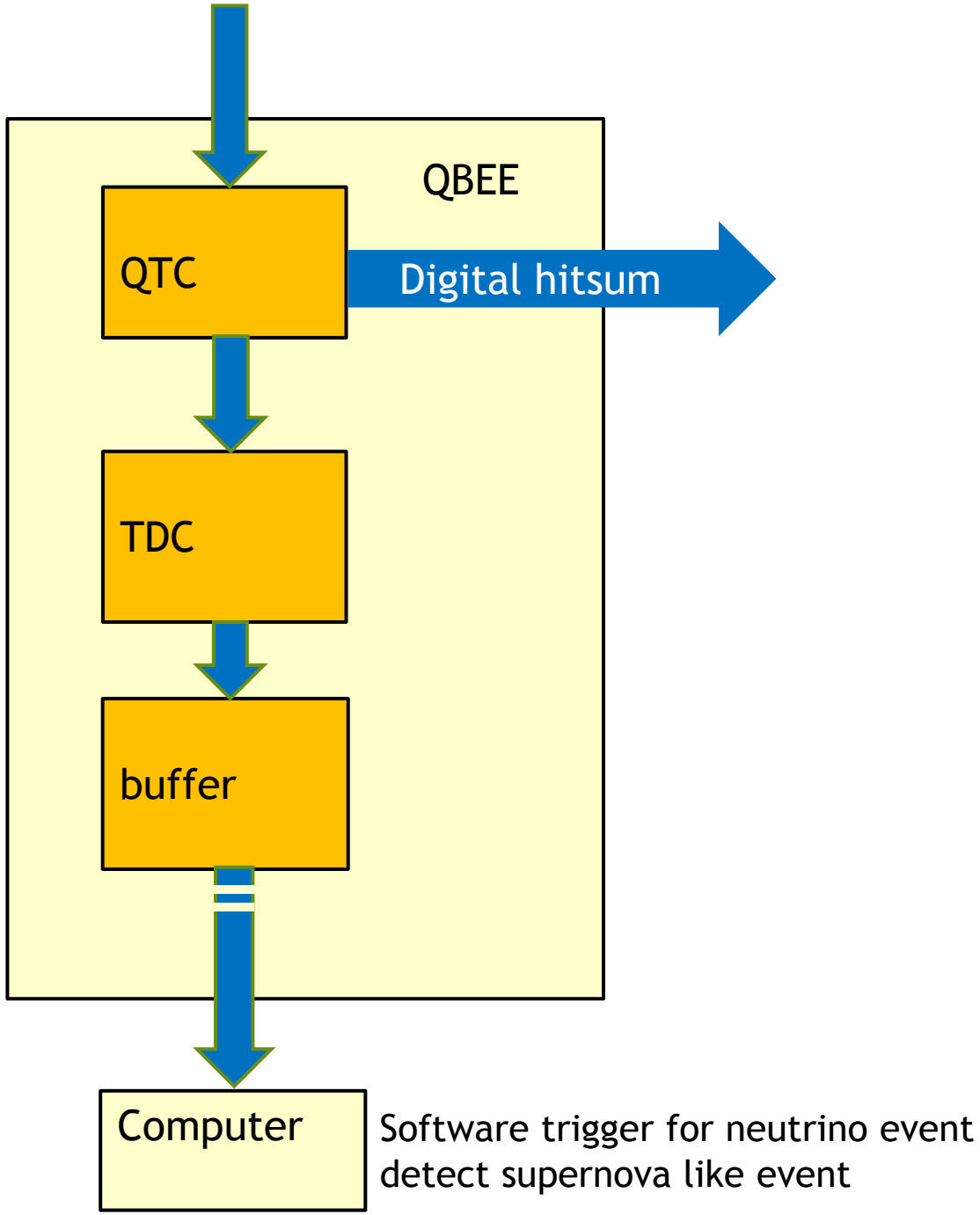

new DAQ system

- on a board, FPGA calculate sum of 10 digital hitsum signals
  - digital hitsum: # of PMT (0~24) that detect a photon in 17ns (60MHz)
- data are sent to PC and stored in the disk
- whole system synchronizes with SK master clock(60MHz)
  → same clock source for QBEE (front-end electronics)

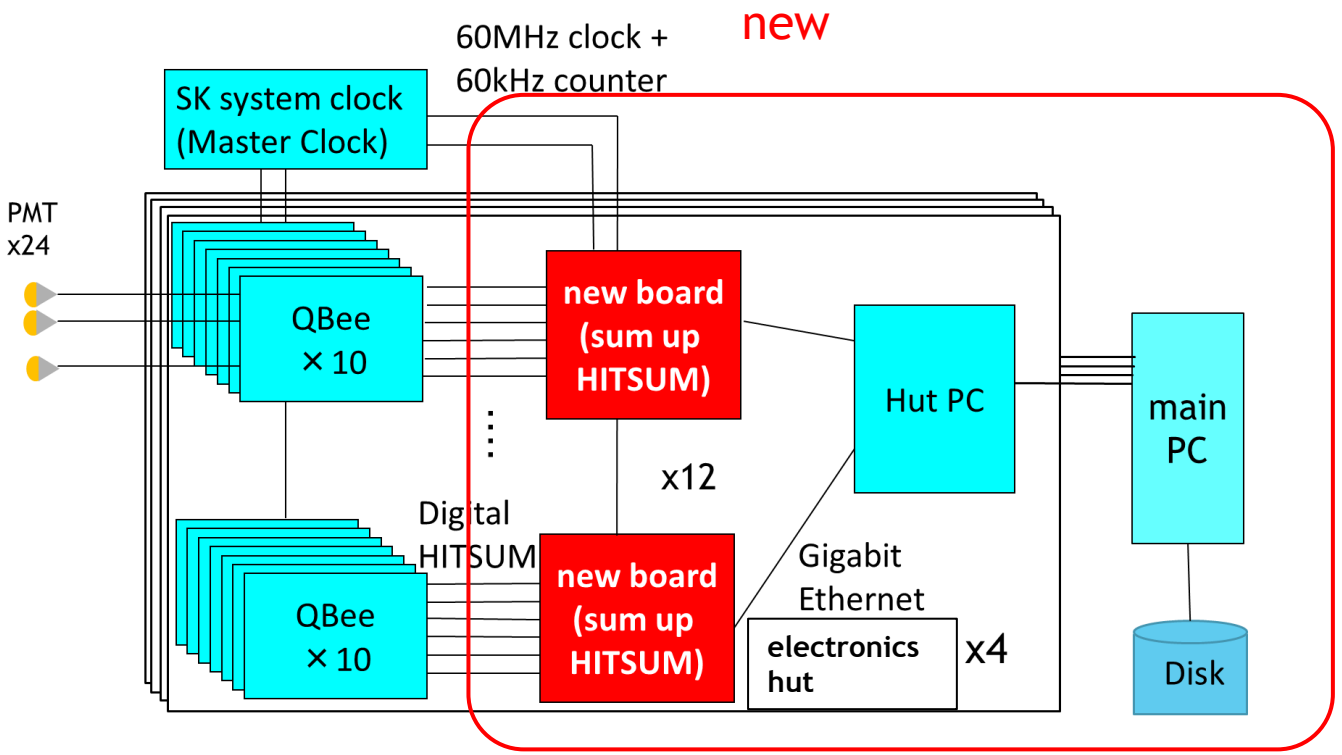

new DAQ system

- constant output – 60kHz
  - for decreasing data rate, use total hitsum for 17us
  - based on this data, each board can detect supernova burst and generate a trigger
    → generate a veto signal for TDC and pre-scale events in the current DAQ
- detailed output – 60MHz
  - stored in the 4GB memory on the board ~ 1min
  - when supernova occurs, stop writing and start reading

- FPGA — vertex5
- memory – DDR2 SO-DIMM
- Ethernet – SiTCP

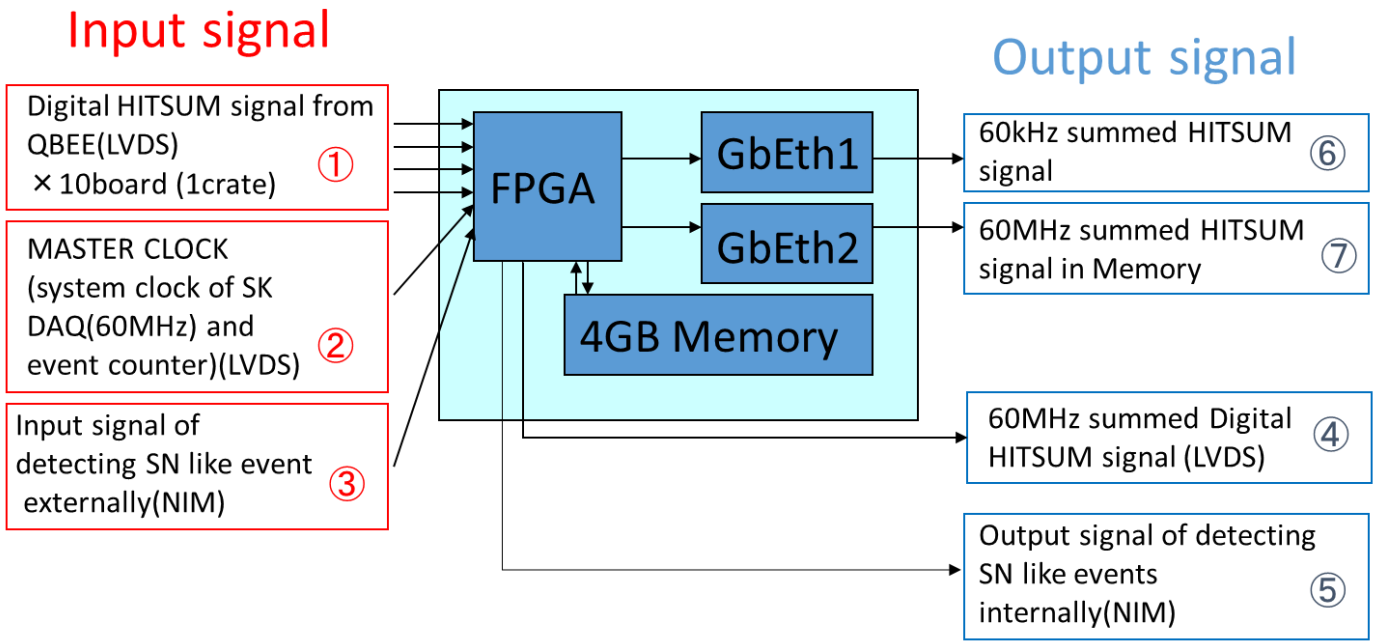

status

- 2013.12 production of boards and component test finished
- 2014. 1 start developing FPGA firmware
- 2014. 4 confirmed a board did not interfere with the current DAQ
- 2014. 8 1 board data taking with SK
- 2014. 9 install
  firmware performance and data quality check
- 2014.10~ improving firmware

current status

- install all boards, cables and PCs
- each board worked
- network connection between board and PC was confirmed
- system test
  - compared with QBEE data
  - measured the rate of the SN trigger
  - searched the cause of fake SN trigger

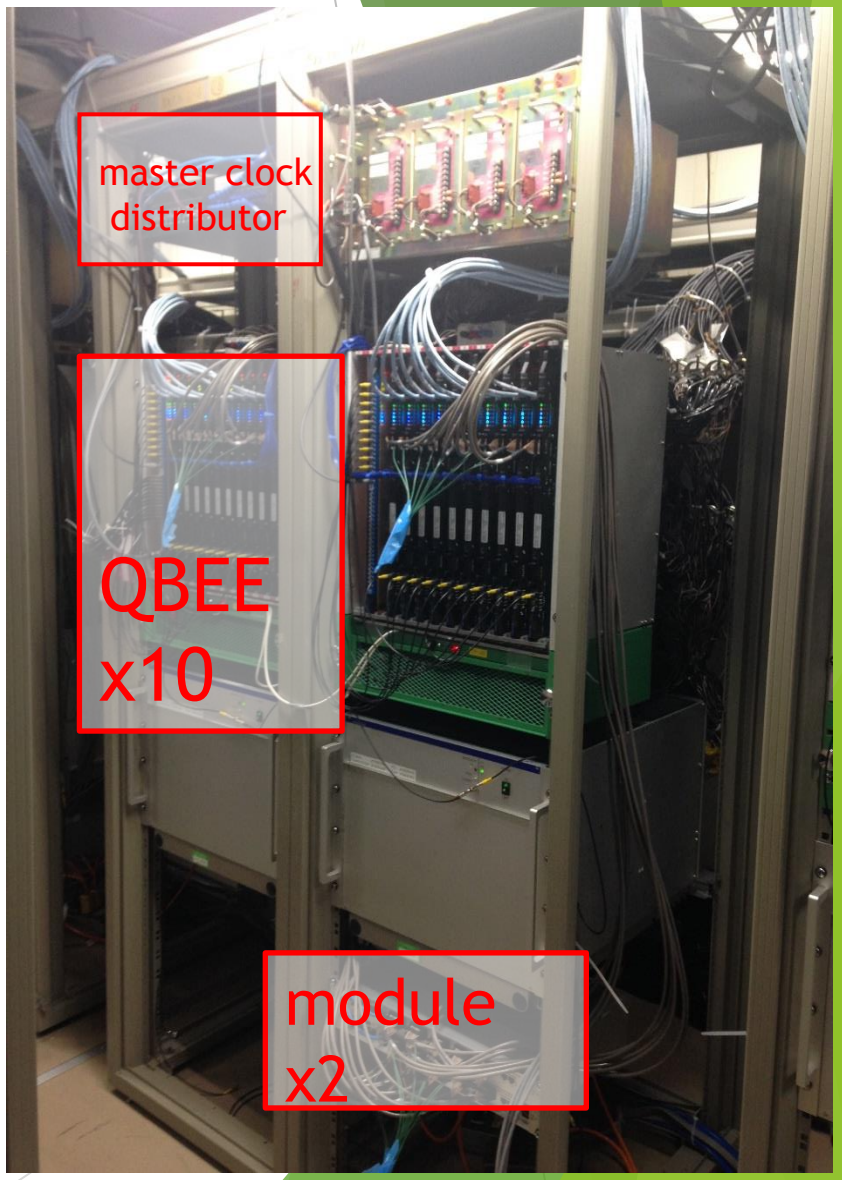

system test

- data for a typical 3 sec
- sum of 240PMT x 1024clocks
- dark noise, radioactivity ~50hits
- single event ~ 240hits
  - muon
- two bin ~ 240hits
  - QBEE calibration signal (pedestal/CAL)
- ~900hits
  - PMT calibration signal (xenon lamp)
  - previous bin(~300) is also xenon lamp event

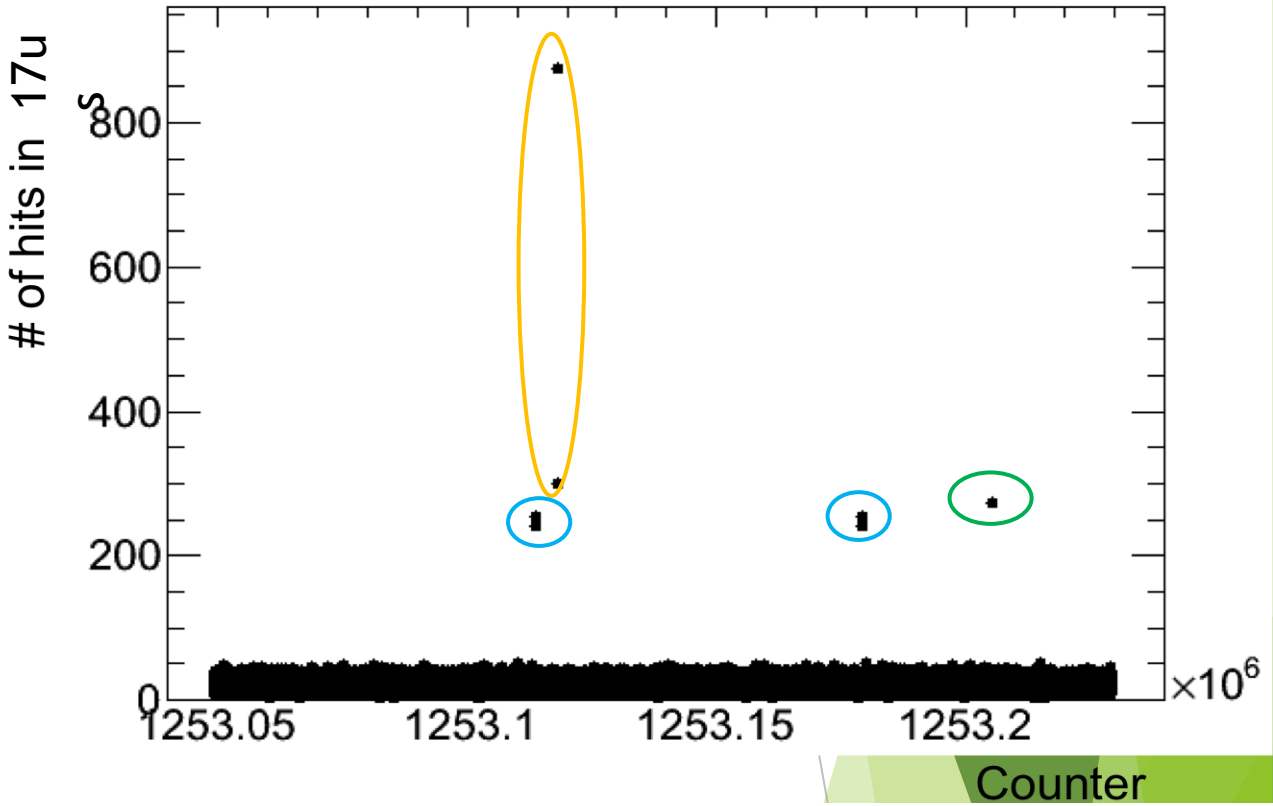

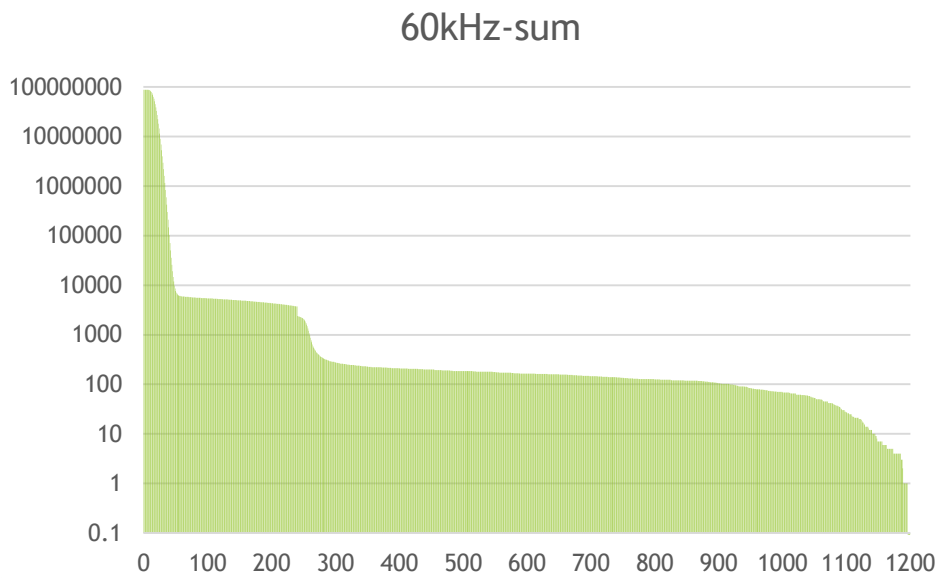

muon event

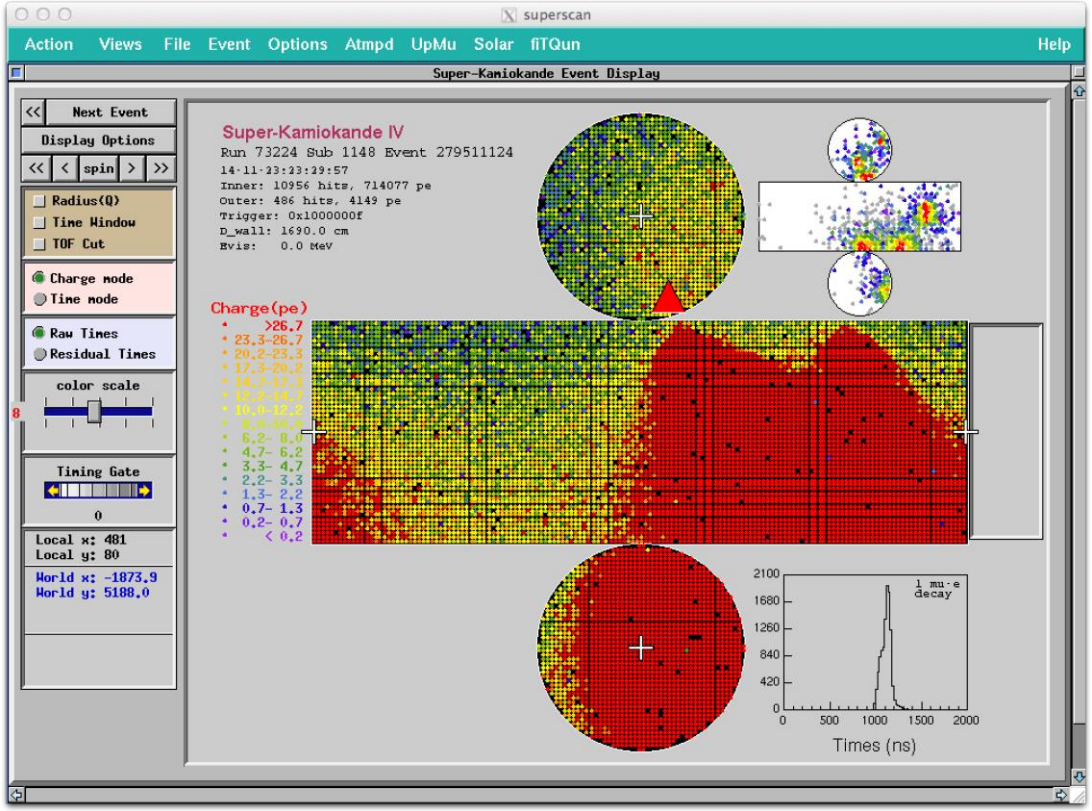
superscan
Action Views File Event Options Atmpd UpMu Solar fiTQun Help
Super-Kamiokande Event Display
Next Event
Display Options
spin
Radius(Q)
Time Window
TOF Cut
Charge mode
Time mode
Raw Times
Residual Times
color scale
Timing Gate
Local x: 481
Local y: 80
World x: -1873.9
World y: 5188.0
Super-Kamiokande IV
Run 73224 Sub 1148 Event 279511124
14-11-23:23:29:57
Inner: 10956 hits, 714077 pe
Outer: 486 hits, 4149 pe
Trigger: 0x1000000f
D_wall: 1690.0 cm
Evis: 0.0 MeV
Charge(pe)
>26.7
23.3-26.7
20.2-23.3
6.2- 8.0
4.7- 6.2
3.3- 4.7
2.2- 3.3
1.3- 2.2
0.7- 1.3
0.2- 0.7
< 0.2
1 mu-e decay
Times (ns)

compare data with QBEE ~ ped/CAL events

- ped/CAL : same gate for QBEE data
  → ~480hits x 1bin is expected for the new system
- split into two → timing shift
- SK event data contains T, Q information for 40us
  - search the start point of the 17us block that consistent with the 60kHz-sum
- 520ns(~1000 TDCcount)
- for other events, QBEE and new module became consistent with this shift

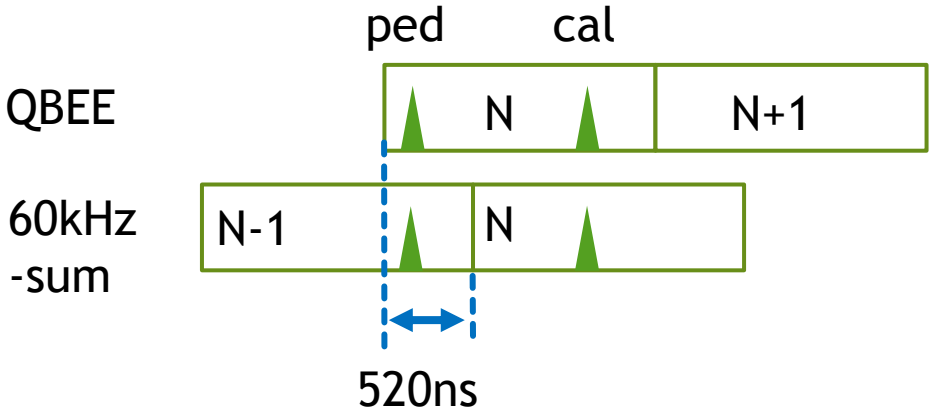

N:ped+cal~480

N-1:ped~240
N :cal~240

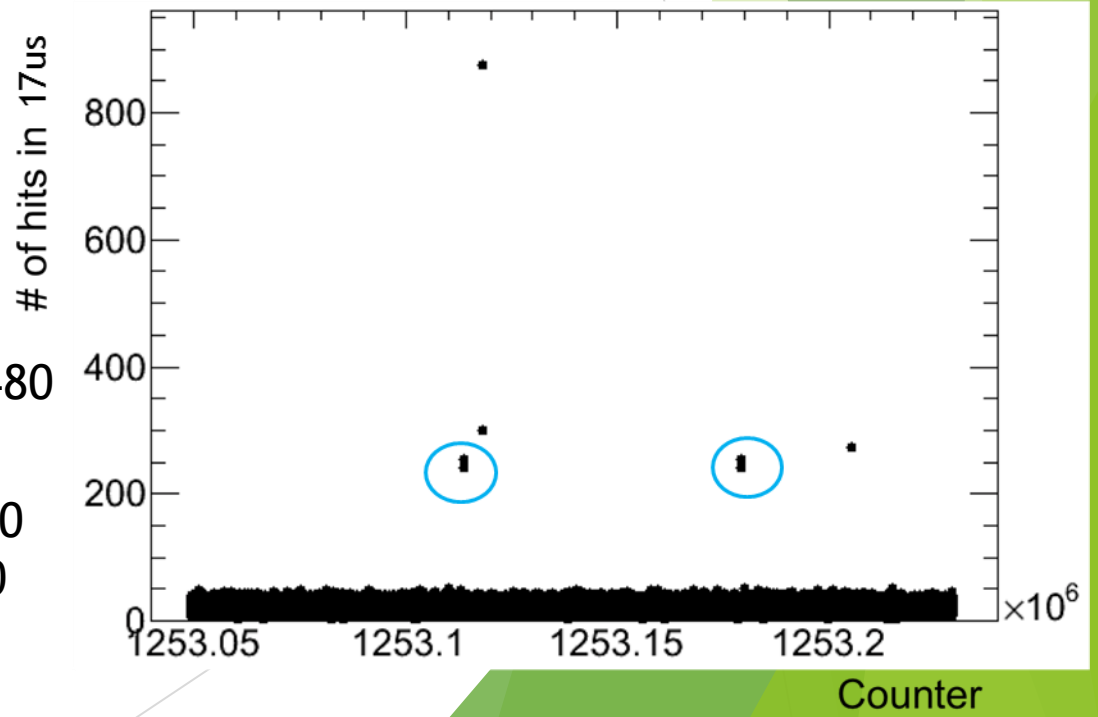

SN trigger logic

- condition for each board: 100hits /240PMT/1024clock x 3times
- this condition is decided not to detect high energy events (muon etc.)
  - events over 100hits ~ 2Hz
  - when this event occurs near the start/end of the gate, hitsum is over the threshold twice
    → require 3 times
- now: detect an event before/after the ped, CAL
  - 6 fake trigger/day
  - to avoid this problem, make ped, CAL one gate by changing the firmware

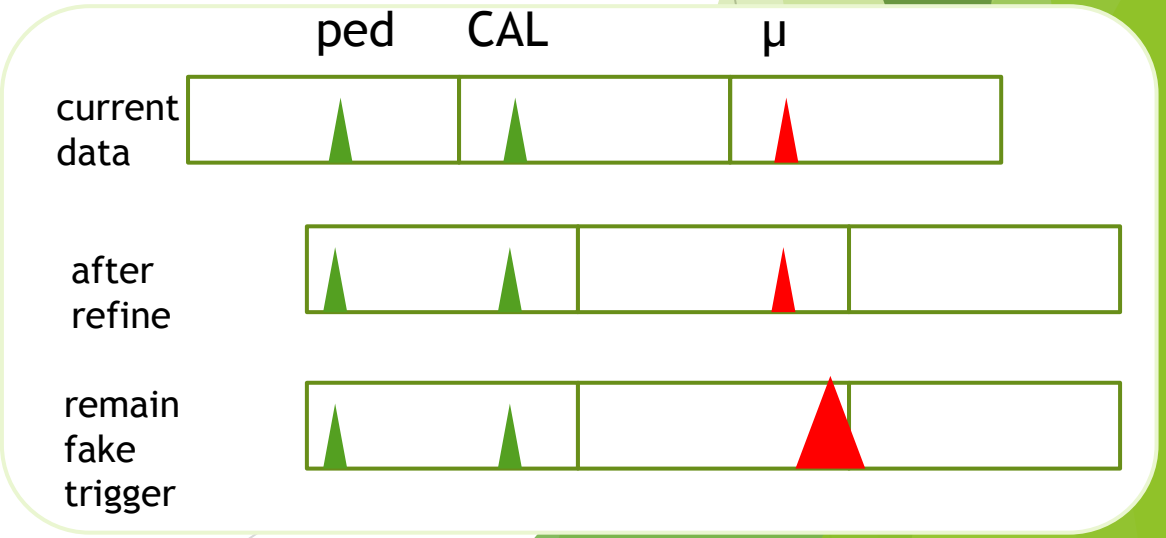

SN trigger test

- fake trigger other than the muon around ped/CAL
- 2 in 41hours ~ 1 fake/day
  - cased by super high energy muon
  - detected at the end of the gate
    → signal reflected in cables etc → after pulse
- 60MHz-sum data of 10 min will lost in a day
  - time for reading data from the memory
  - system cannot write and read at the same time
- for reduce fake triggers
  - require 4 continuous hitsum over threshold
  - raise threshold from 100 hits

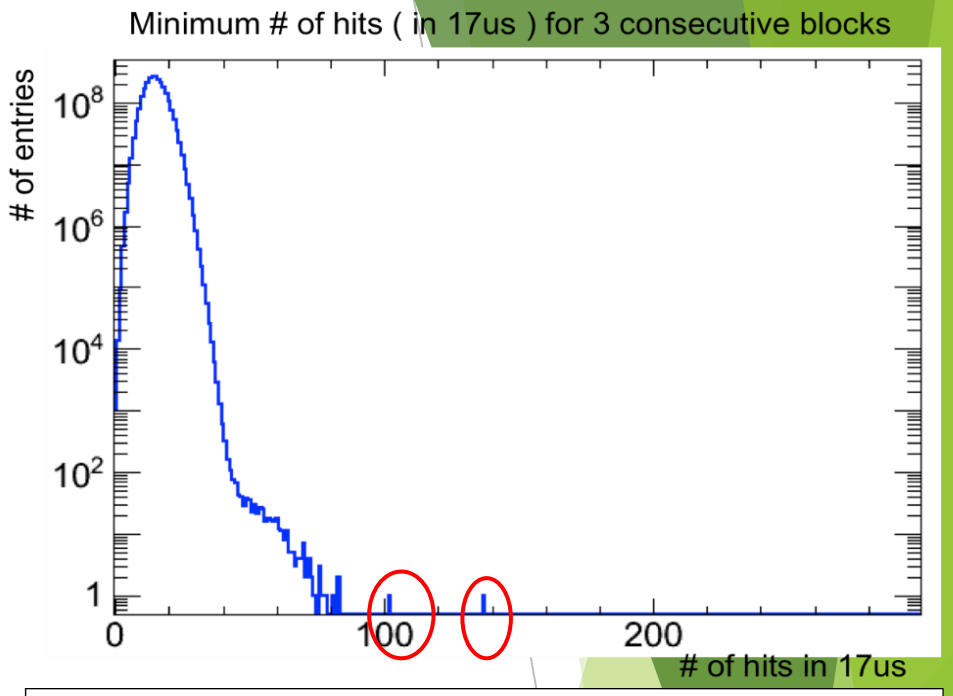

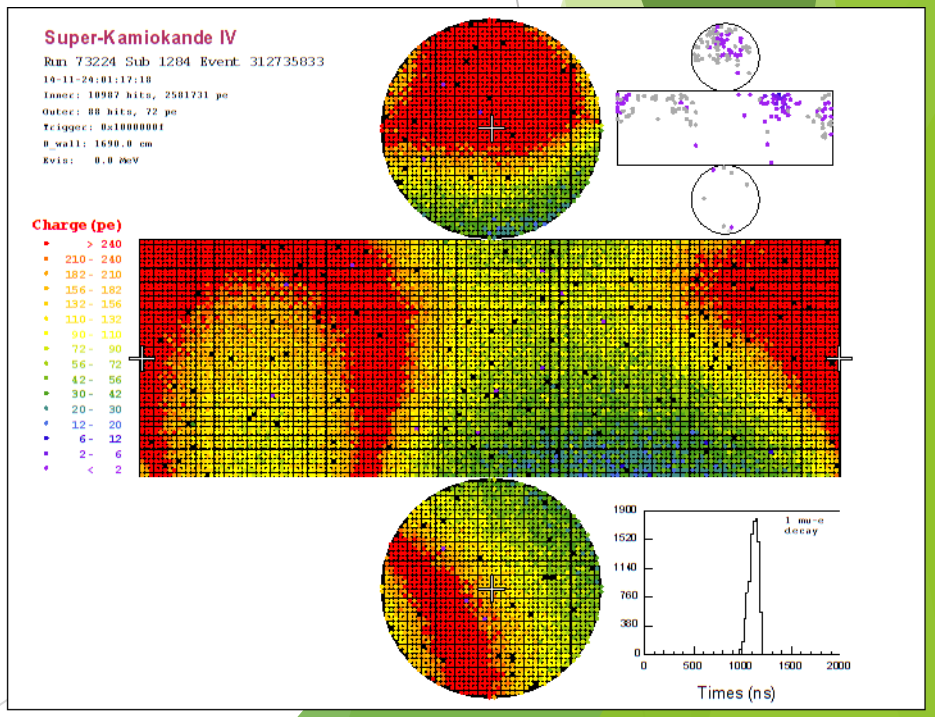

summary, plan

- developed a new DAQ system for nearby supernova
- installed all modules
- took data with SK
- data was consistent with QBEE except for timing shift
- refining firmware
  - shift between 60kHz-sum and QBEE
  - tagging 60MHz-sum with master clock counter
  - synchronize 60kHz- and 60MHz- sum
- develop the program for computers, start run in April