Operation of the Upgraded ATLAS Level-1 Central Trigger System

Julian Glatzer
on behalf of the
ATLAS Collaboration

21st International Conference on Computing in High Energy and Nuclear Physics

The LHC and the ATLAS Experiment

The Large Hadron Collider

- 27 km proton-proton (p-Pb, Pb-Pb) collider with maximum design √s=14 TeV

Upgrades for Run II

- Energy increased from 8 TeV to 13 TeV
- Instant. luminosity up to ≈10^{34} $cm^{-2}s^{-1}$

The ATLAS Experiment

- Multi-purpose detector using tracking system, calorimeters and a muon spectrometer
- Trigger system to select rare processes 40 MHz collision rate →1 kHz recorded rate

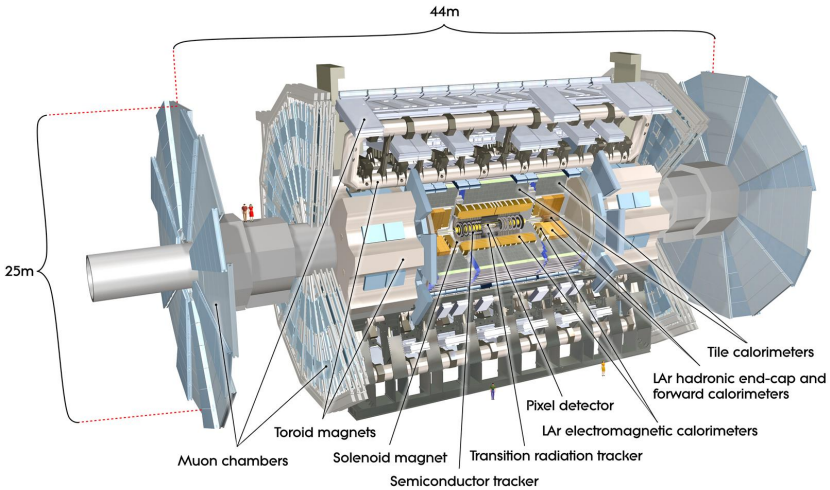

Challenges for ATLAS Data Taking in Run II

- Energy 7/8 TeV → 13 TeV
  → 20% higher pp cross section
  → hard interaction cross section x2

- Higher instantaneous luminosity
- Lower bunch spacing 50ns → 25ns

→ Significantly higher single-particle trigger rates (baseline triggers in Run I)

- Available trigger system was pushed to design limits already in 2012
- Allow for more complex trigger selections (topological trigger processor @ 40MHz)
- Update trigger and read-out system to higher bandwidth

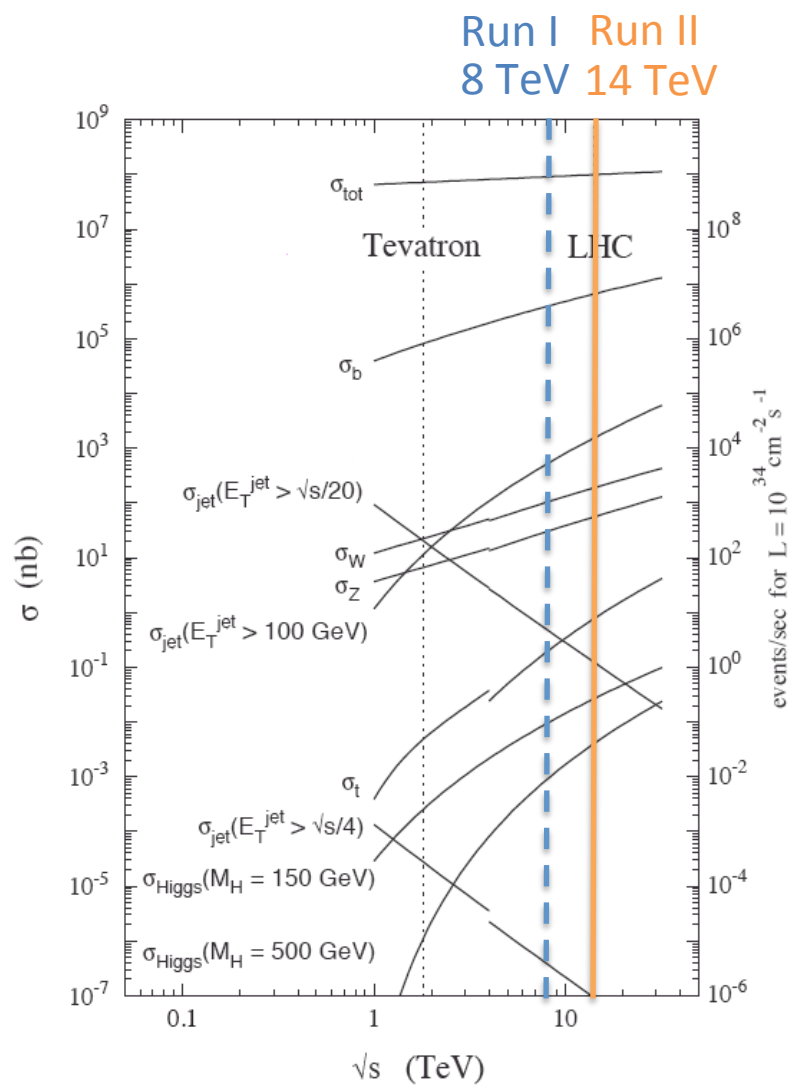

ATLAS Trigger and Data Acquisition

Trigger provides two stage rate reduction

- Level-1 Trigger:
  - Hardware trigger with calorimeter/ muon information
  - Synchronous with LHC collisions
- High-level Trigger:
  - Runs on computer farm
  - Full, granular information for part of the event or full event

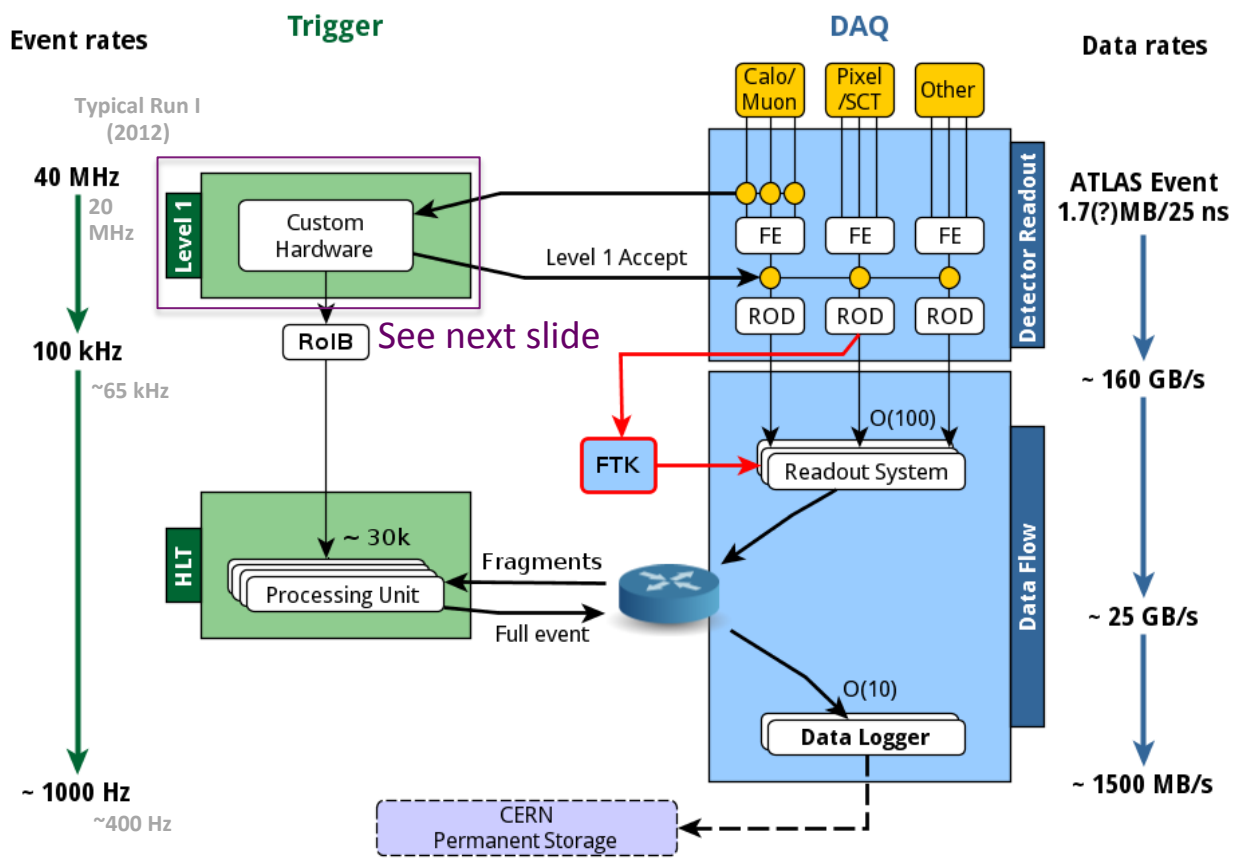

The ATLAS Level-1 Trigger

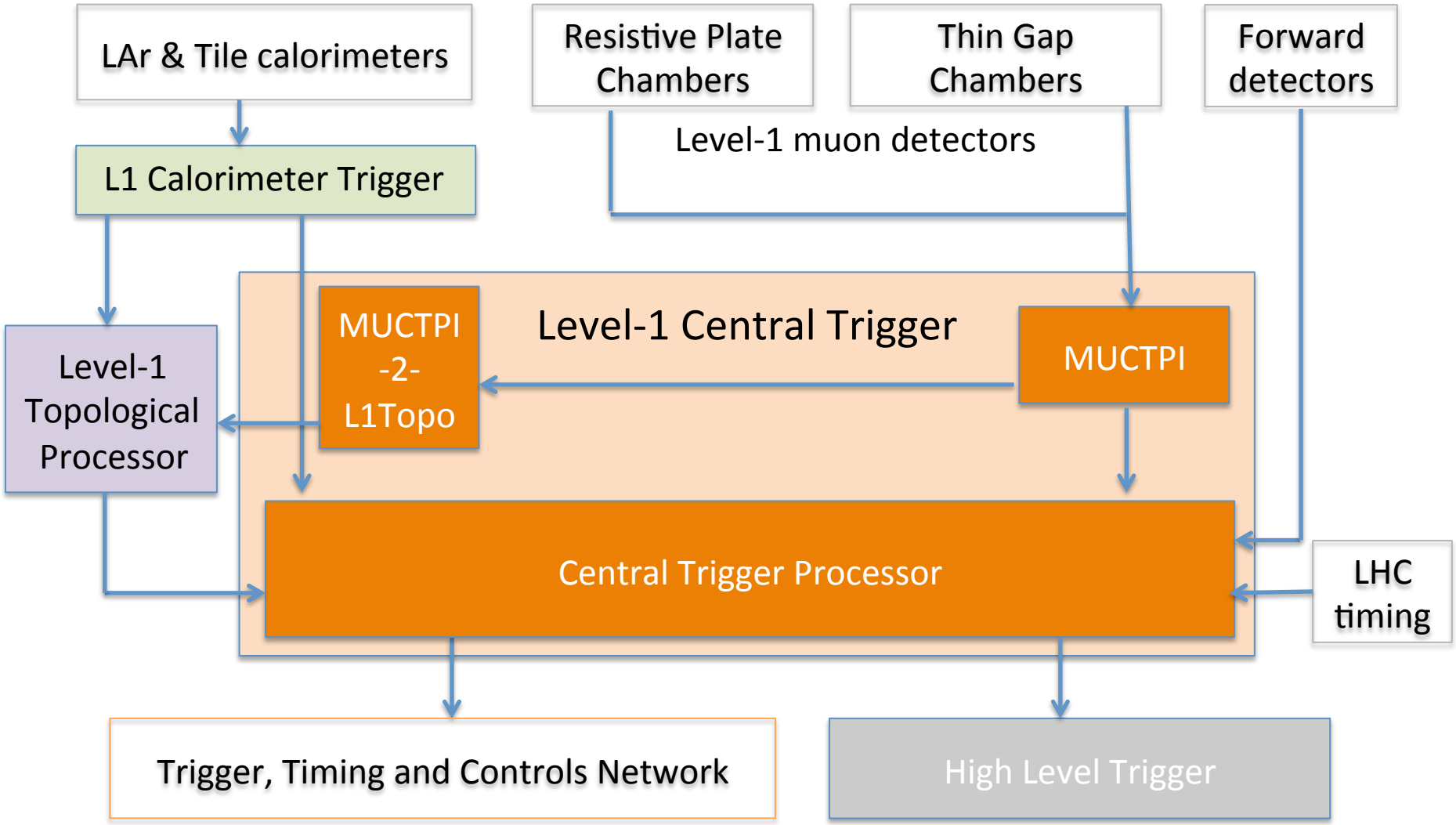

Implementation of the CTP

Machine Interface

- Receives LHC clock and orbit signal

Input Modules

- Receive trigger inputs from sub-detectors
- Synchronize and align to LHC Bunch Crossing (BC)

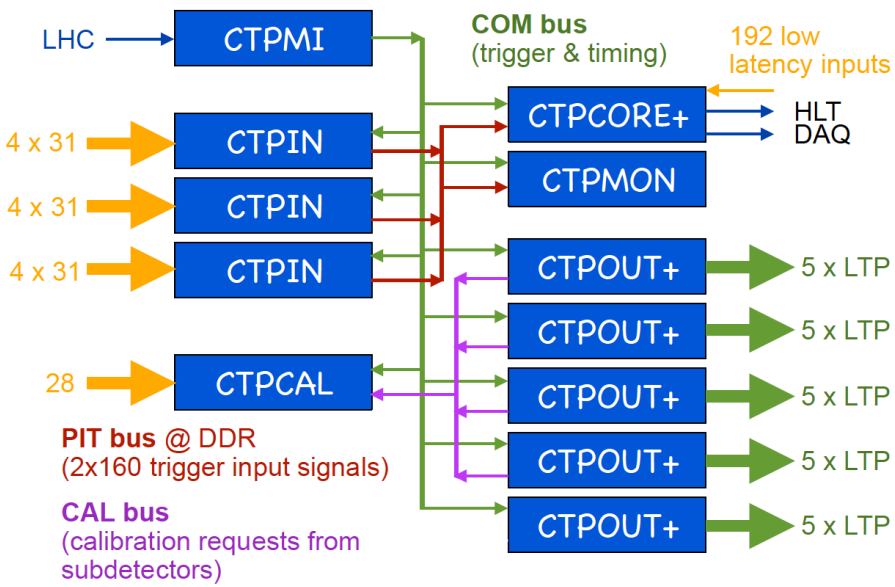

Backplane bus

Calibration Module

Monitoring Module

Core Module

- Obtain Level-1 Accept (L1A) based on trigger menu with prescales and beam patterns
- Generate dead time
- Regions of Interest for High Level Trigger
- Readout data to DAQ
- Low latency inputs

Output Modules

- Send Level-1 Accept to subdetector front-ends
- Readout busy signal

Forming the Level-1 Accept Decision

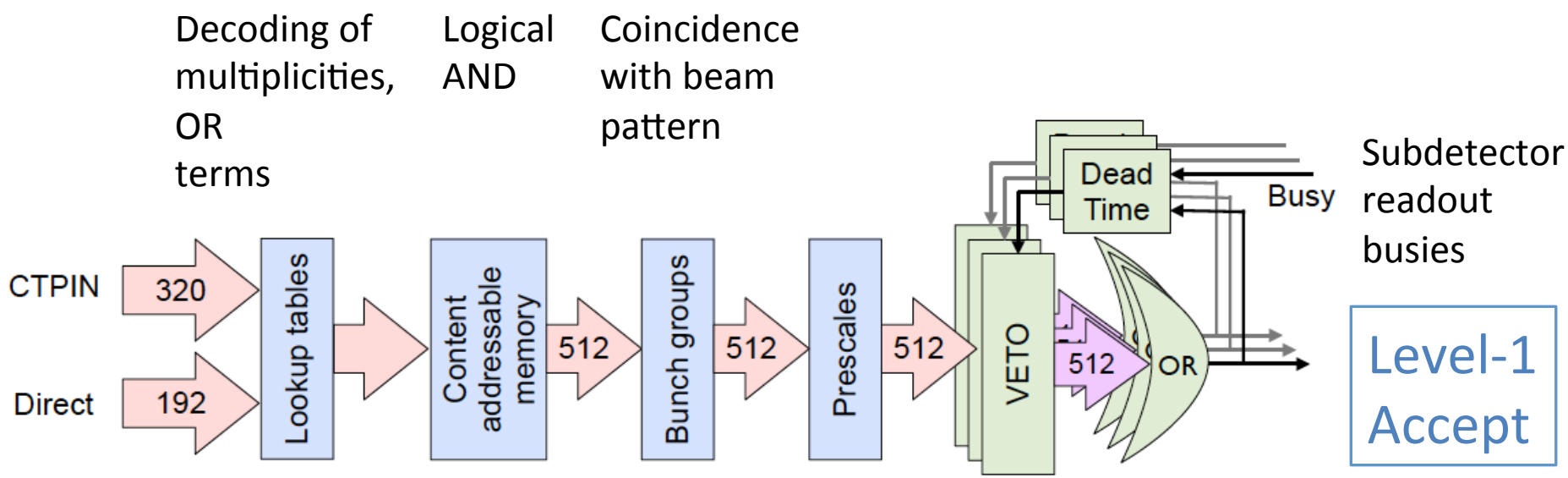

- 320 trigger input bits from subdetectors via CTPIN
- 192 low latency direct inputs to CTPCORE

Muon Topological Information

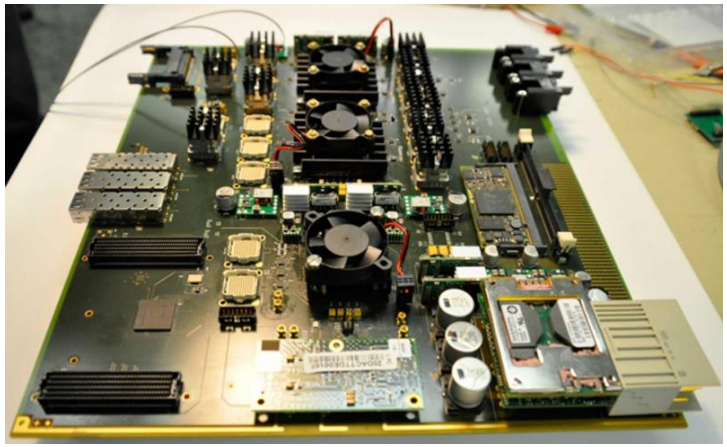

Muon trigger objects

- 16 overclocked LEMO cables send 3-vector of two muon candidates per octant (profit from very flexible Run I design and adapt firmware only)

0	1	1	1	0	0	1	0	0	1	0	1	1	1	0	1
η			ϕ			p_T		η			ϕ			p_T	
Candidate 1								Candidate 2							

- MUCTPI-2-L1Topo interface combines electrical signal from MUCTPI and sends optical signal

- Level-1 topological processor aims at rate reduction by using topological information for level-1 trigger decision
  - More details in presentation by E. Simioni

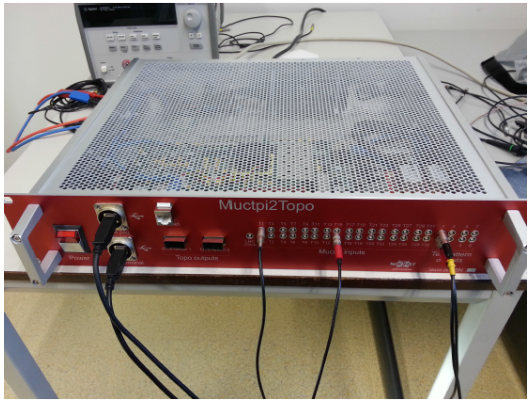

Central Trigger Upgrades for Run II

- Increase output rate from 75 kHz to 100kHz
- More resources
  - 320 input bits on backplane (run I: 160)
  - 512 trigger items (run I: 256)
  - More CTPOUT output cables
- 192 direct input bits
  - Level-1 topological processor adds latency to trigger path → save latency in CTP with direct input to CTPCORE
- Improved monitoring capabilities
- Support for three logical sessions
  - Enables parallel usage of trigger during commissioning and testing
  - Level-1 accept and timing signals duplicated

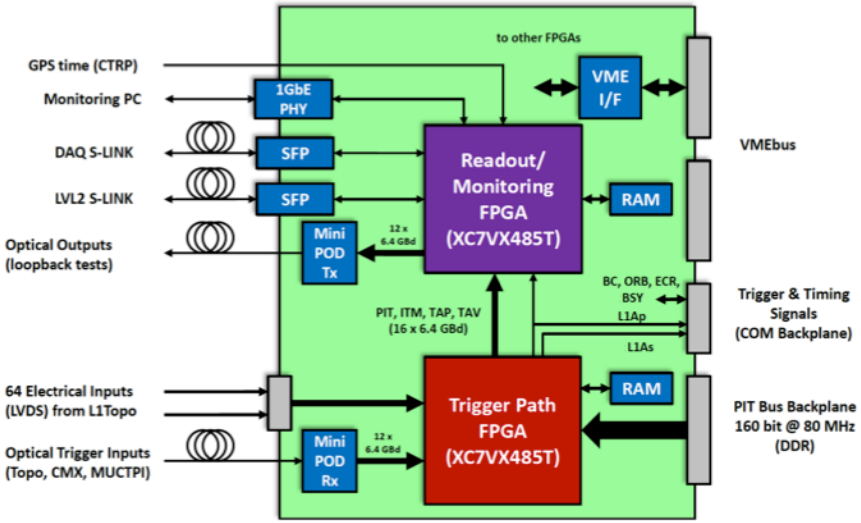

CTPCORE+ module

CTPCORE:

new hardware, firmware

CTPIN, CTPMON:

new firmware with double data rate

CTPOUT:

new hardware, firmware

New software

Run I Online Software Design

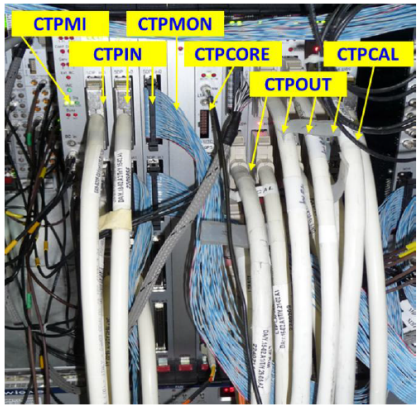

Run I Online Software:

- Close to hardware, organized by boards
- Logic for
  - trigger configuration
  - control of timing signal, dead time, luminosity blocks and readout
  - monitoring

  in one big, monolithic application using several threads

Consequences for operation:

- Non-essential monitoring tasks may stop data-taking of ATLAS detector
- Configuration and control in one application require
  - complicated build process
  - hard to maintain

New system:

- Needs to run three trigger sessions in parallel
  - → More complex
  - → Avoid access same hardware register at the same time

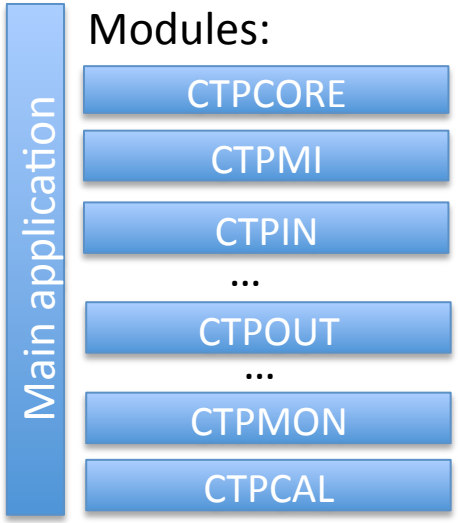

Software Design Goals

- Factorization of configuration, control and monitoring
- Access to trigger configuration database limited to one application
- Strict partitioning: Every session only accesses its private registers or goes via server (enforced via reservation system)

- Other tasks are outsourced to small, capsulated and restartable monitoring clients
- Access to monitoring information by remote expert must be easy

➔ Client-server model with four main applications

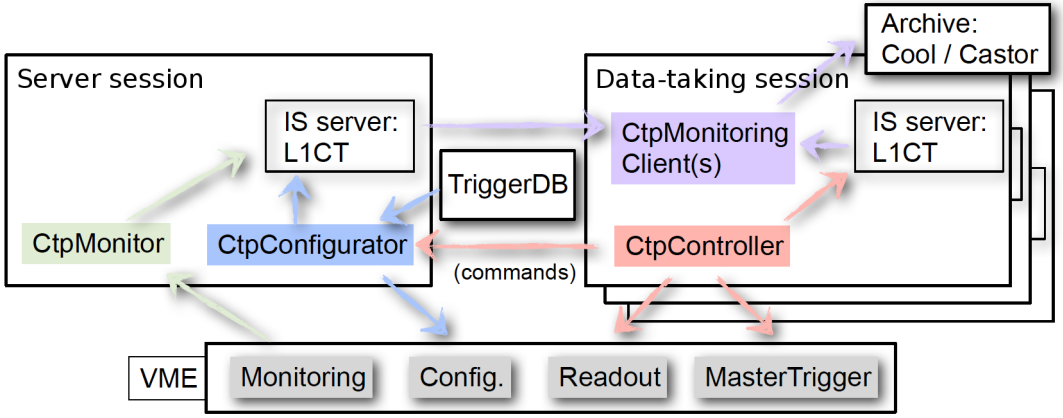

Run II Software Design

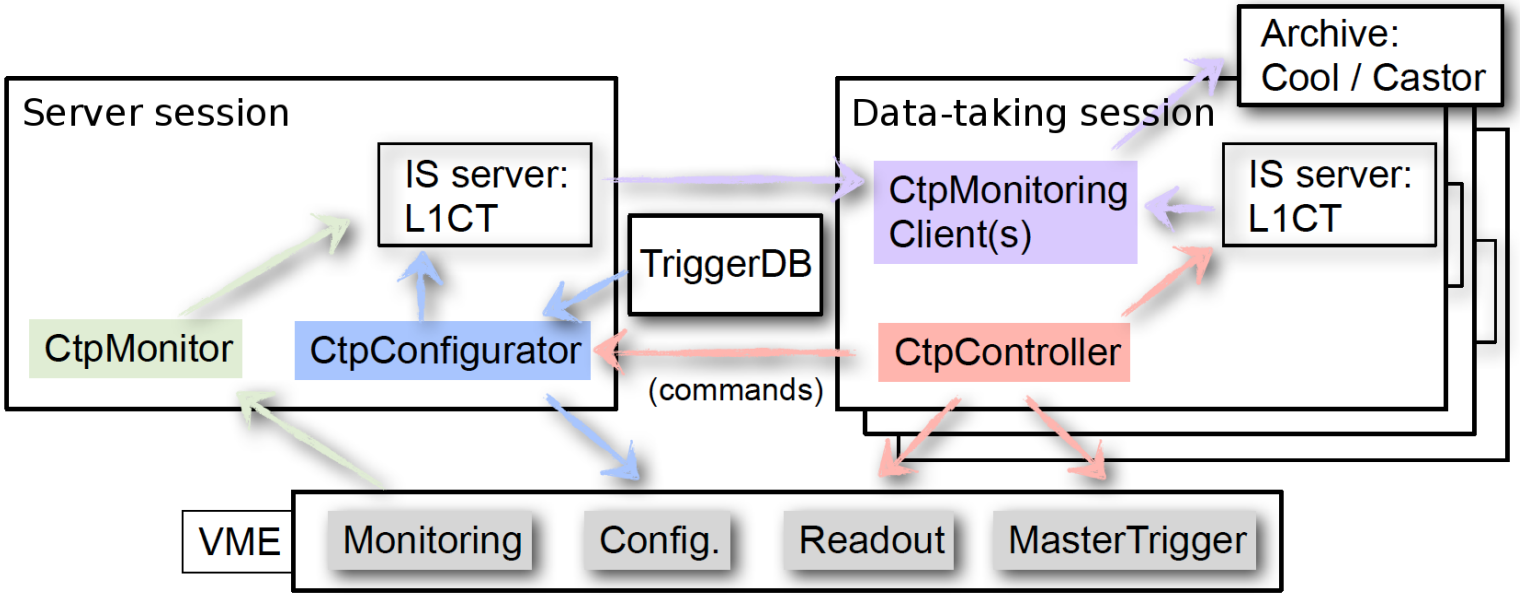

Monitoring Server:

- Periodically reads out and publishes raw data from hardware
  - Trigger rates
  - Event information
  - Readout busy

Run II Software Design

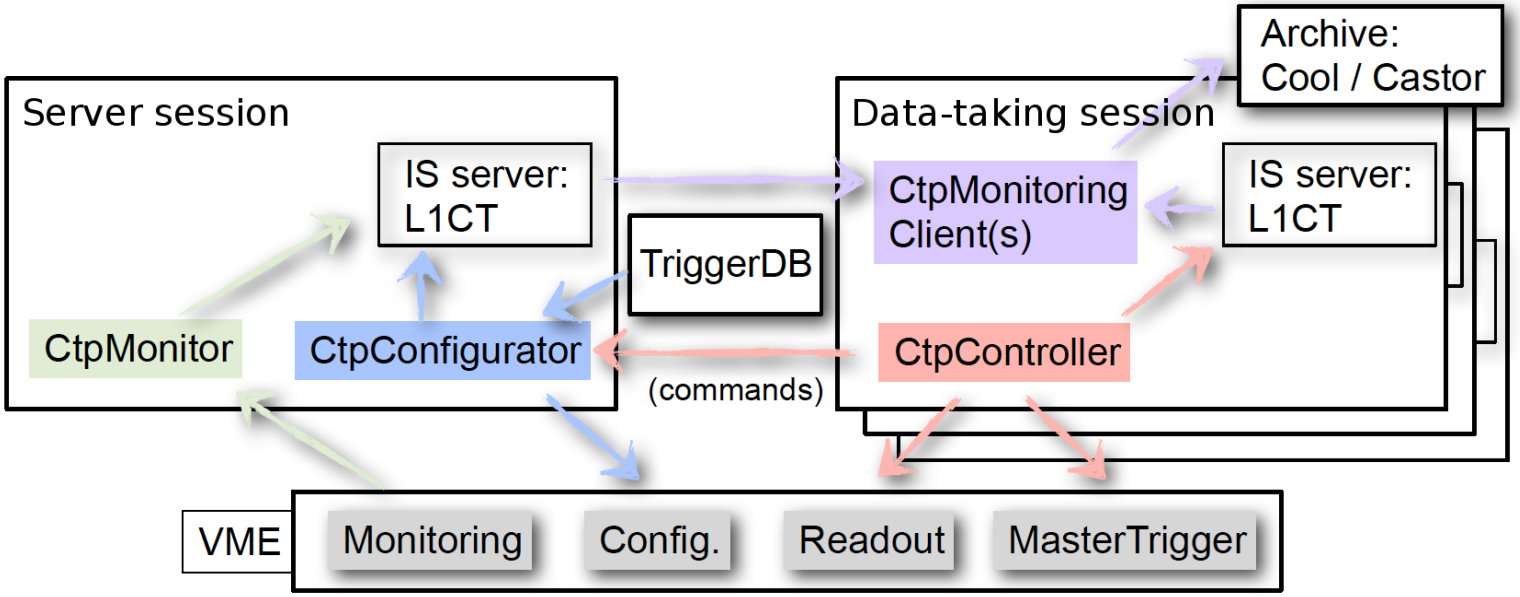

Configurator:

- Reads trigger menu from database
- Writes menu (items, prescales,…) to hardware
- Configures general parameters

Run II Software Design

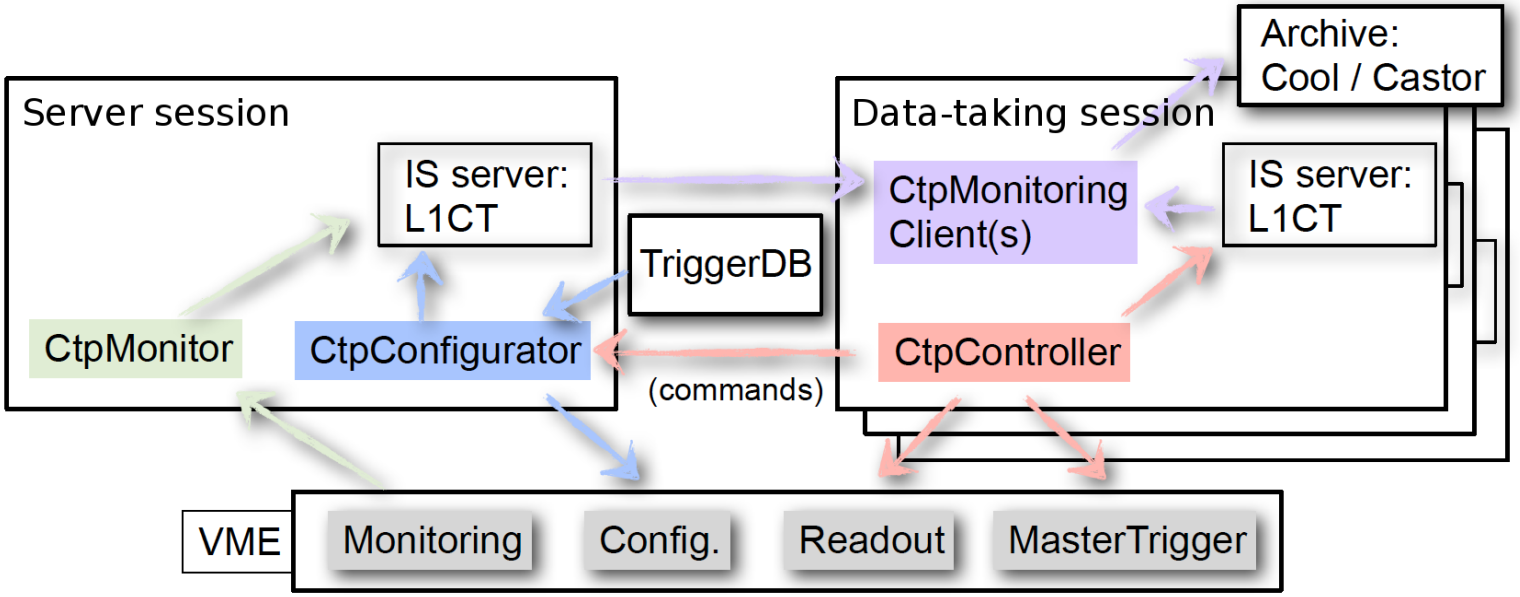

Controller:

- Interface used by shifter
- Holds/resumes trigger
- Luminosity blocks (event sets with same conditions)
- Sends periodic signals (Event Counter Reset, …)
- Sets readout busy and readout configuration up

Run II Software Design

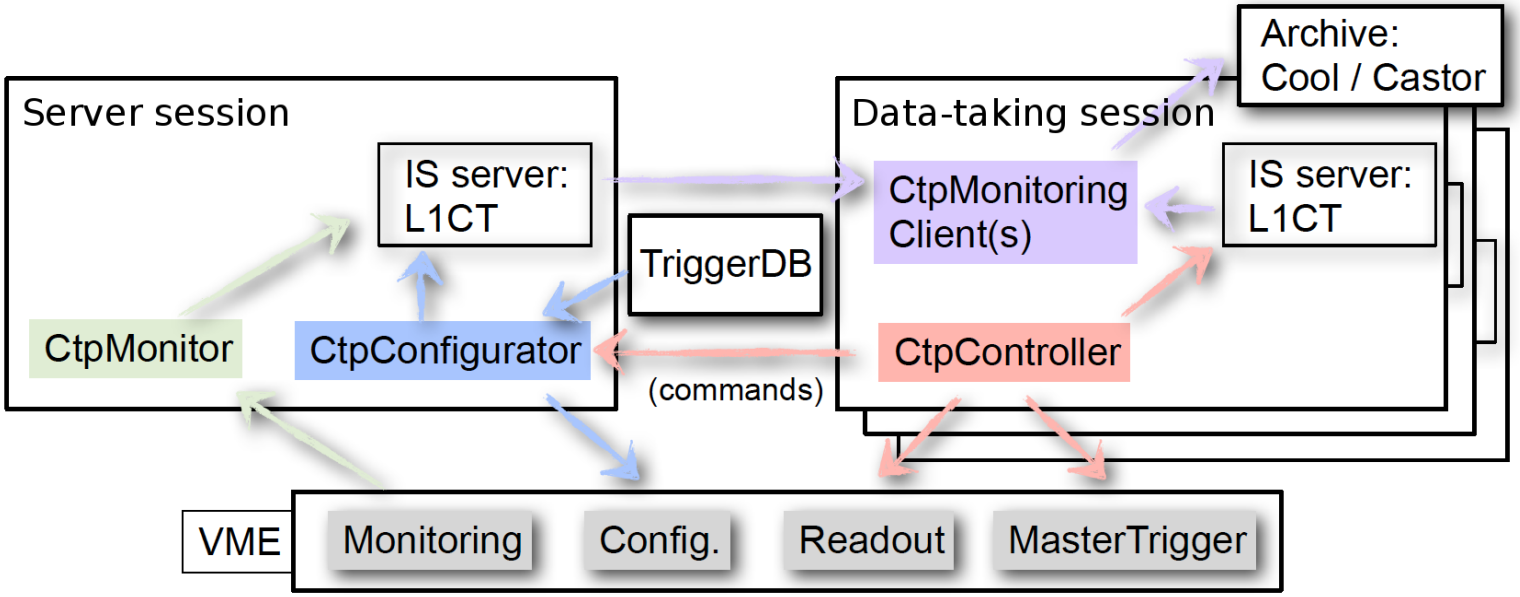

Monitoring Clients:

- Republish and combine monitoring information in human-readable way
- Archive information

Monitoring Web Pages

- Remote Central Trigger expert needs to get a quick and good overview of ATLAS running with limited access to computing resources
- Web pages for easy remote access
- Browser available on mobile phones

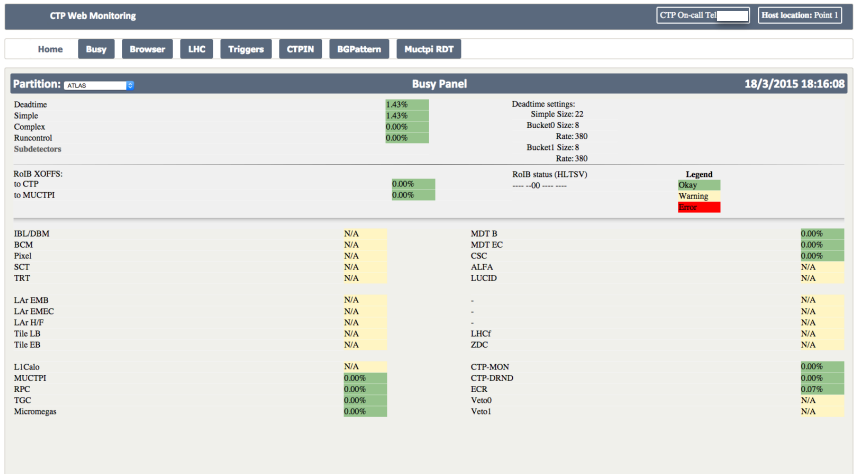

Readout busy information

Trigger rate information

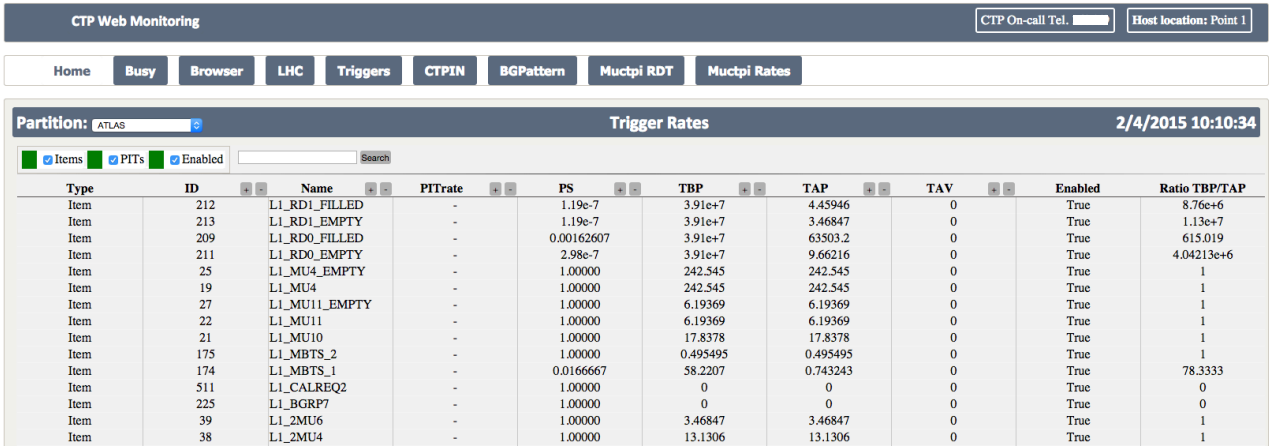

Type	ID	Name	PITrate	PS	TBP	TAP	TAV	Enabled	Ratio TBP/TAP
Item	212	L1_RD1_FILLED	-	1.19e-7	3.91e+7	4.45946	0	True	8.76e+6
Item	213	L1_RD1_EMPTY	-	1.19e-7	3.91e+7	3.46847	0	True	1.13e+7
Item	209	L1_RD0_FILLED	-	0.00162607	3.91e+7	63503.2	0	True	615.019
Item	211	L1_RD0_EMPTY	-	2.98e-7	3.91e+7	9.66216	0	True	4.04213e+6
Item	25	L1_MU4_EMPTY	-	1.00000	242.545	242.545	0	True	1
Item	19	L1_MU4	-	1.00000	242.545	242.545	0	True	1
Item	27	L1_MU11_EMPTY	-	1.00000	6.19369	6.19369	0	True	1
Item	22	L1_MU11	-	1.00000	6.19369	6.19369	0	True	1
Item	21	L1_MU10	-	1.00000	17.8378	17.8378	0	True	1
Item	175	L1_MBTS_2	-	1.00000	0.495495	0.495495	0	True	1
Item	174	L1_MBTS_1	-	0.0166667	58.2207	0.743243	0	True	78.3333
Item	511	L1_CALREQ2	-	1.00000	0	0	0	True	0
Item	225	L1_BGRP7	-	1.00000	0	0	0	True	0
Item	39	L1_2MU6	-	1.00000	3.46847	3.46847	0	True	1
Item	38	L1_2MU4	-	1.00000	13.1306	13.1306	0	True	1

Beam Splashes

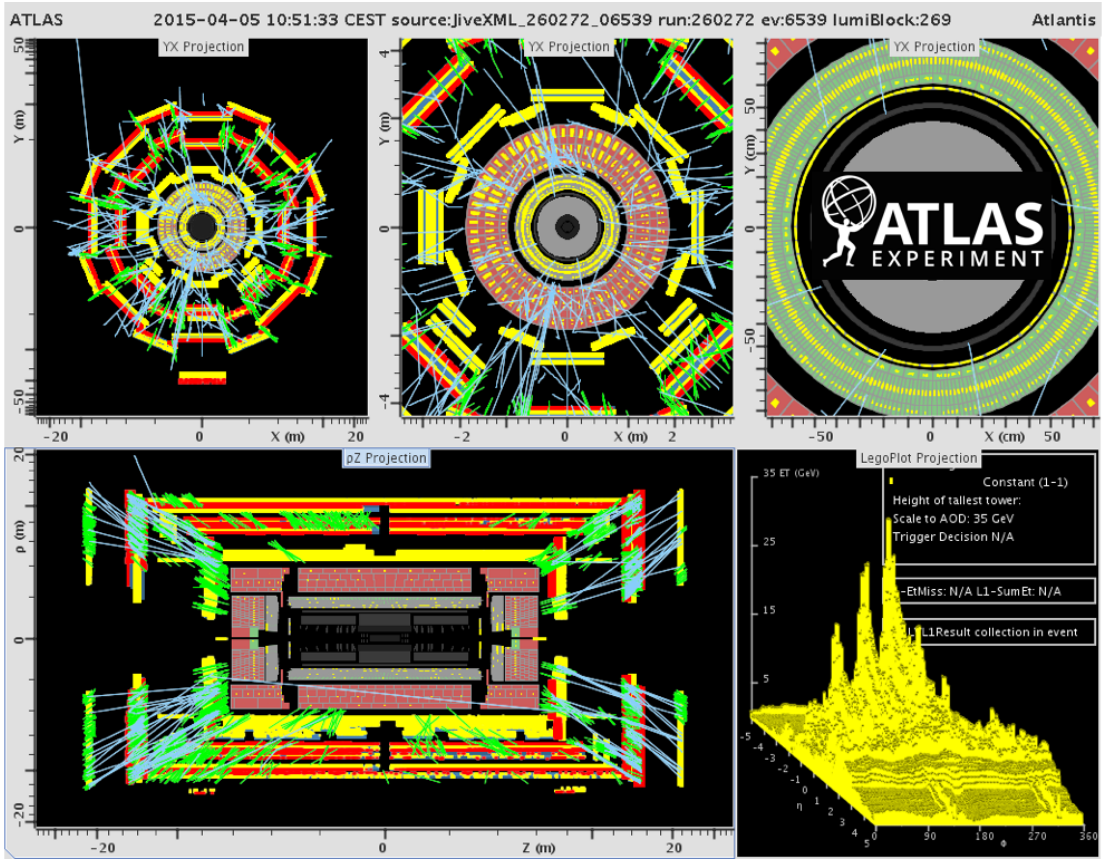

Easter Sunday
April 05, 2015

Summary

- ★ New trigger requirements due to LHC Run II conditions
  - ★ Central Trigger Processor is at the core of the ATLAS trigger system
- ★ Major upgrades to Central Trigger Processor
  - ★ New hardware, firmware and software architecture
  - ★ Twice as many trigger items
- ★ Full system successfully operated in pre-beam tests under realistic conditions
  - ★ Many beam splash events have been recorded with high efficiency
  - ★ Stable operation of online software during many hours of pre-beam tests

BACKUP

Run II Software Design

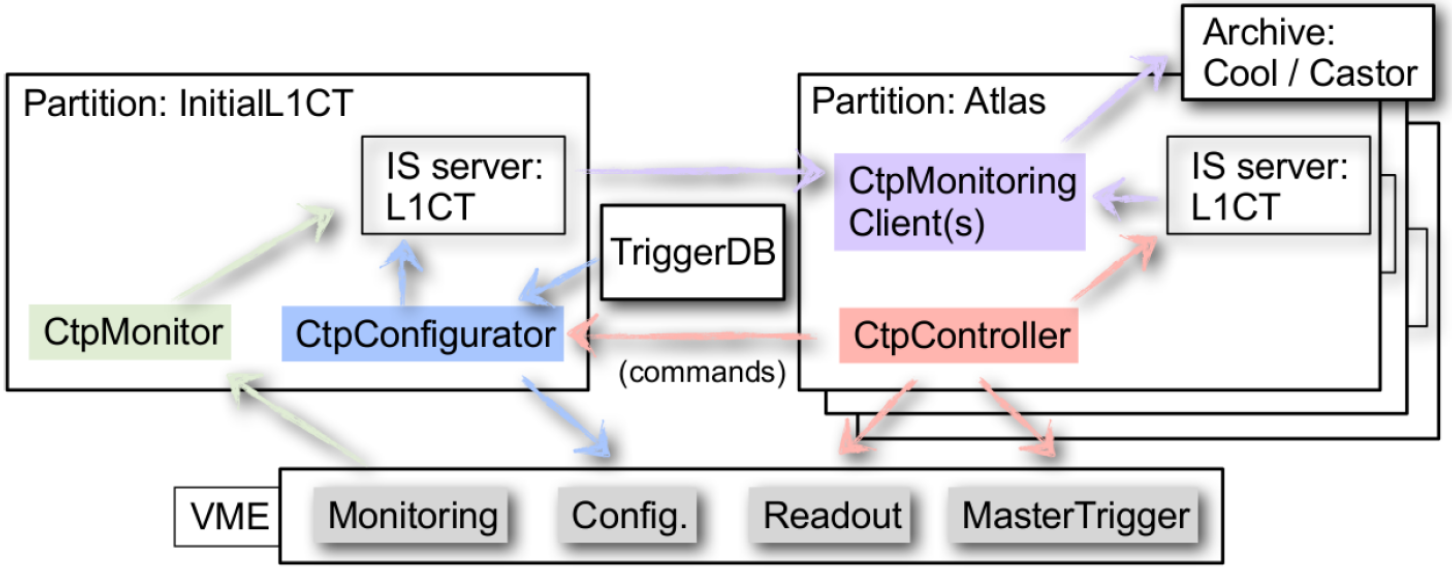

Monitoring Server:
- Periodically reads out raw data from hardware
  - Trigger rates
  - Event information
  - Readout busy
  - Publishes raw data

Configurator:
- Reads trigger menu from database
- Writes menu (items, prescales,…) to hardware
- Configures general parameters

Controller:
- Interface used by shifter
- Holds/resumes trigger
- Luminosity blocks (event set with same conditions)
- Sends periodic signals (ECR,…)
- Sets busy & readout up

Monitoring Clients:
- Republishes monitoring information in human-readable way
- Combines information with trigger menu
- Archiving