Fermilab

Managed by Fermi Research Alliance, LLC for the U.S. Department of Energy Office of Science

Data Preservation at the Fermilab Tevatron

Bodhitha Jayatilaka, Ken Herner, Joe Boyd, Willis Sakumoto

CHEP 2015 - Okinawa, Japan

14 April 2015

Introduction: Tevatron Run II

- 1.96 TeV proton-antiproton collider
  - Two general purpose experiments
  - CDF and DØ
- Ceased operations 30 Sep 2011
  - ~12 fb^{-1} (~10 fb^{-1} recorded)/expt
- Unique data
  - Unique initial state vs LHC
    - Asymmetry measurements, flavor physics
  - Multiple energy collisions
    - 300 GeV and 900 GeV in addition to 1960 GeV
  - "Legacy" precision measurements (*e.g.*, M_W, m_t)
- Continued physics output
  - Expect long tail at both experiments
  - ~20 papers at each experiment in 2014

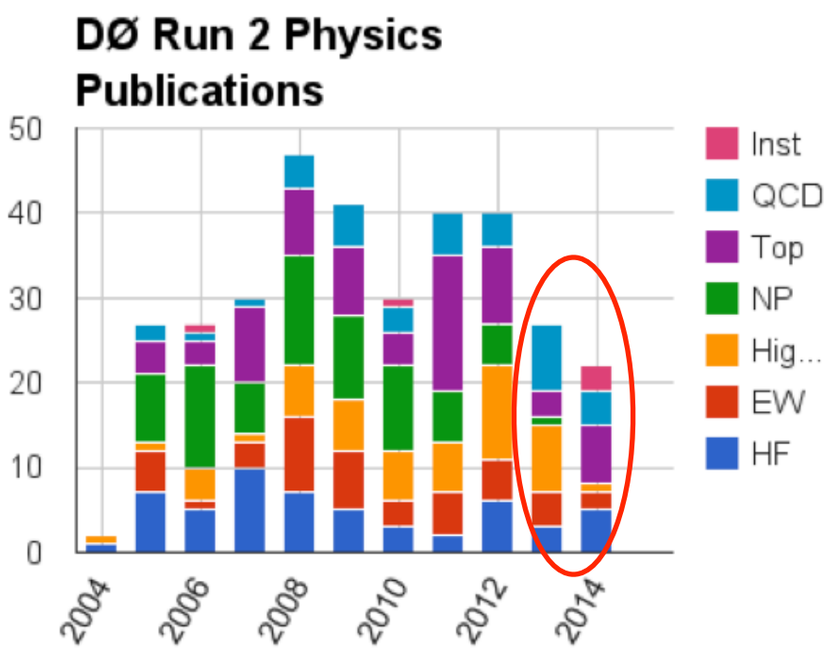

The Tevatron Data Preservation Project

- Goal: **Complete analysis capability** (DPHEP "level 4") through Nov **2020** (SL6 EOL)
  - Includes ability to generate and simulate new MC
  - All necessary documentation is preserved and accessible
  - Collision data on tape remains accessible
  - Computing environment for analysis is available and accessible

- Funded project for two years (2012-14)
  - Seek common solutions between experiments whenever possible

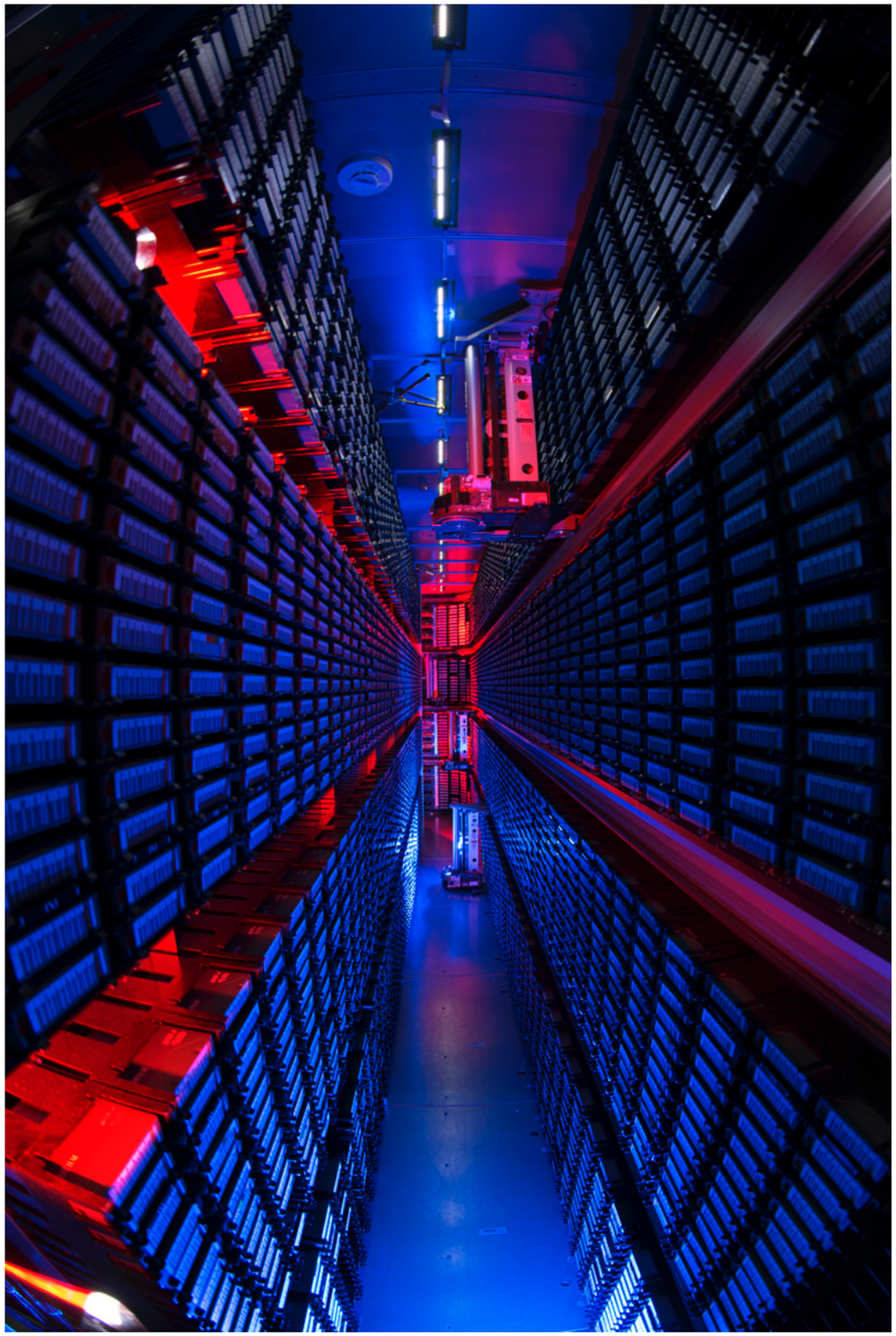

Preserving the data

- Each experiment has ~10 PB of data on tape
  - Includes collision data and simulation
  - Migrate to current media (most recently LTO4->T10KC)
- CDF Italian institutions are migrating a subset of data (raw+ntuples) to CNAF
  - Using GARR (Italian R&E) network. Copy is now complete (~4PB)
- Non-statistical data (e.g., calibrations) for both experiments are in Oracle DBs
  - Continue to upgrade Oracle servers as needed for security needs

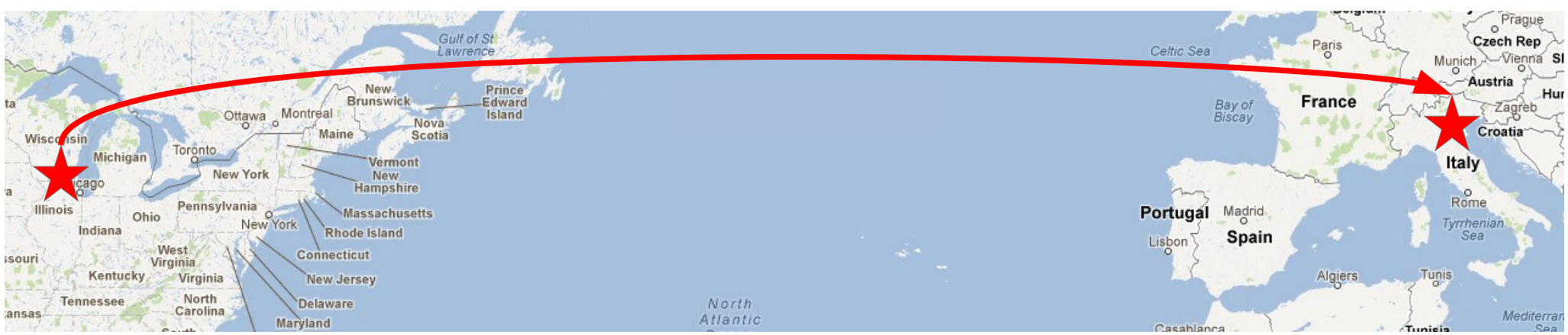

Preserving the computing environment

Up to September 2011

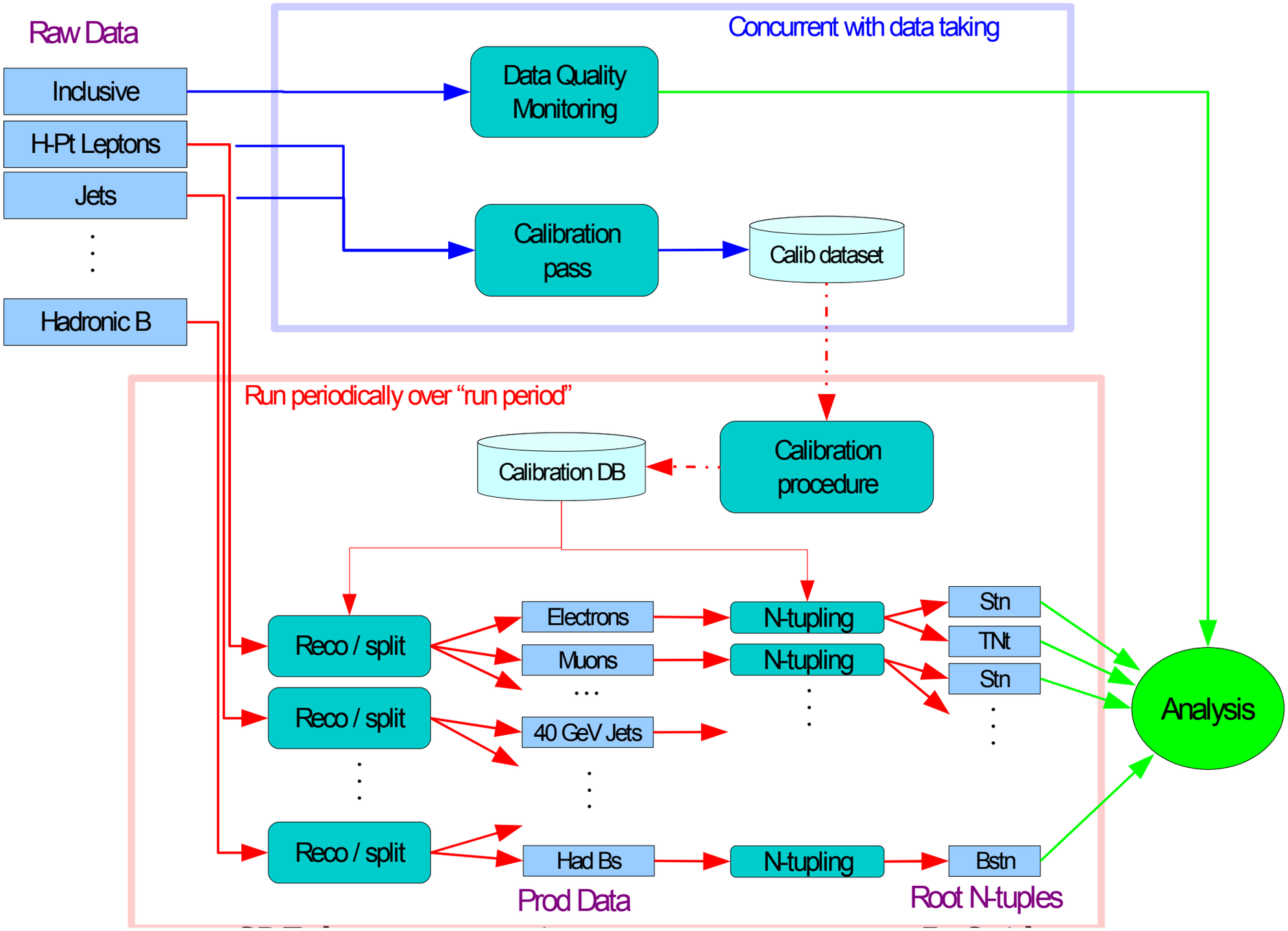

Preserving the computing environment

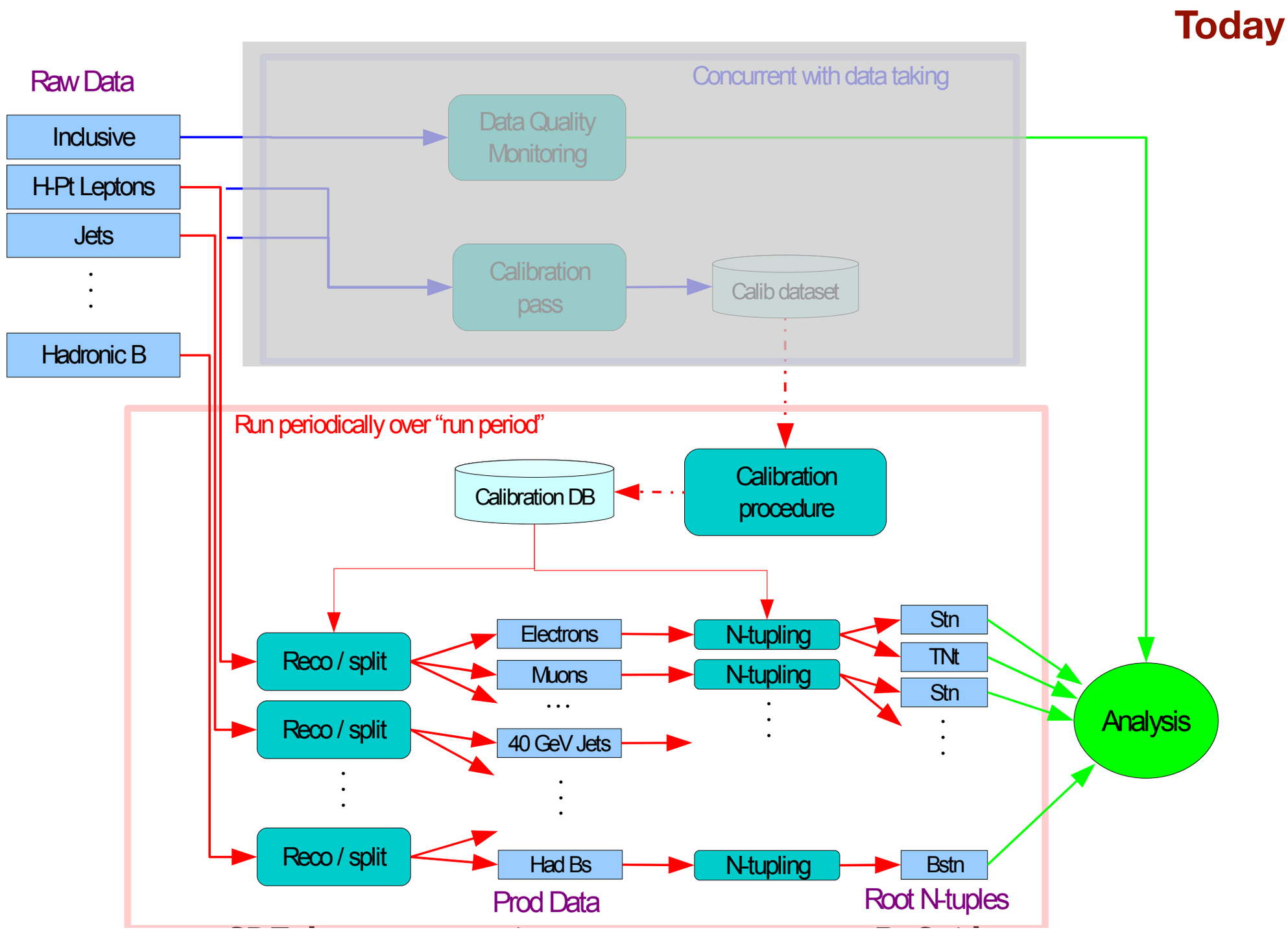

Preserving the computing environment

Today

Data to preserve
Code to preserve

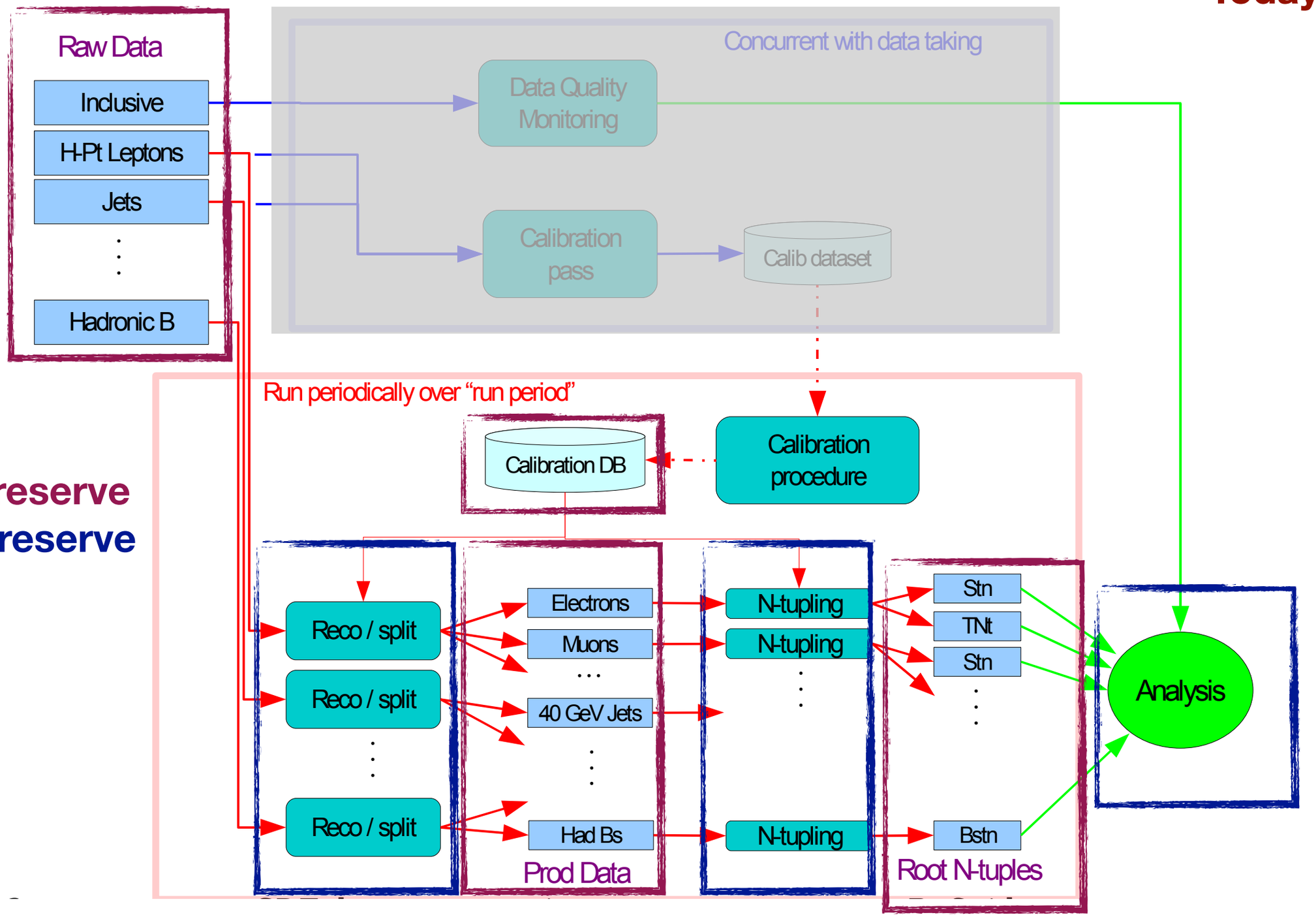

Adapting Intensity Frontier computing tools

- The post-Tevatron landscape of experiments at Fermilab are largely smaller experiments (e.g., neutrino detection, dark matter searches)
  - Generally described as “Intensity Frontier” (IF) experiments
  - Impractical for each experiment to develop own computing infrastructure

- **FIFE** project aims to develop common tools and infrastructure
  - See talk by P. Mhashilkhar (Thursday, Track 4)

- FIFE toolset includes many that Tevatron experiments can adapt to replace deprecated ones (due to OS/architecture/security reasons)
  - Data access protocol (“SAMWeb”)
    - Modernized (http-based) version of the protocol originally used by CDF/D0
  - Job submission tool for grid computing (“JobSub”)
  - Code distribution (CVMFS repositories)

The software

- At the time of shutdown both CDF and D0 used 32-bit frameworks built on **Scientific Linux 5** (but with **compatibility libraries** to older OSs)
  - CDF Plan: build **legacy release** that contains **no pre-SL6 libraries**
    - Build and test completely on SL6, drop support for all previous releases
    - Release now available for general use
  - D0 Plan: retain compatibility libraries but **test running on SL6**
    - Many ancillary tools dropped in favor of common ones
    - All testing completed and validated

- Both experiments move to **CVMFS** for code distribution
  - User setup scripts modified so that this change is invisible

- Interactive compute resources (including for building code) all moved to **virtualized nodes** maintained by FNAL Computing Sector
  - No dedicated hardware for Tevatron experiments

CDF Distributed Computing

- CDF maintained a dedicated cluster “CDFGrid” at FNAL for ~10 years
  - Also an OSG site serving opportunistic hours to other VOs
  - Was the backbone of CDF computing in Run 2
- CDFGrid shut down on 1-Mar-15 and all CDF jobs now sent to “GPGrid” cluster (shared with other FNAL experiments)
  - Job submission tools for IF experiments implemented with CDF wrapper
  - End-user still runs the same commands
  - Effective rate of computing use unchanged

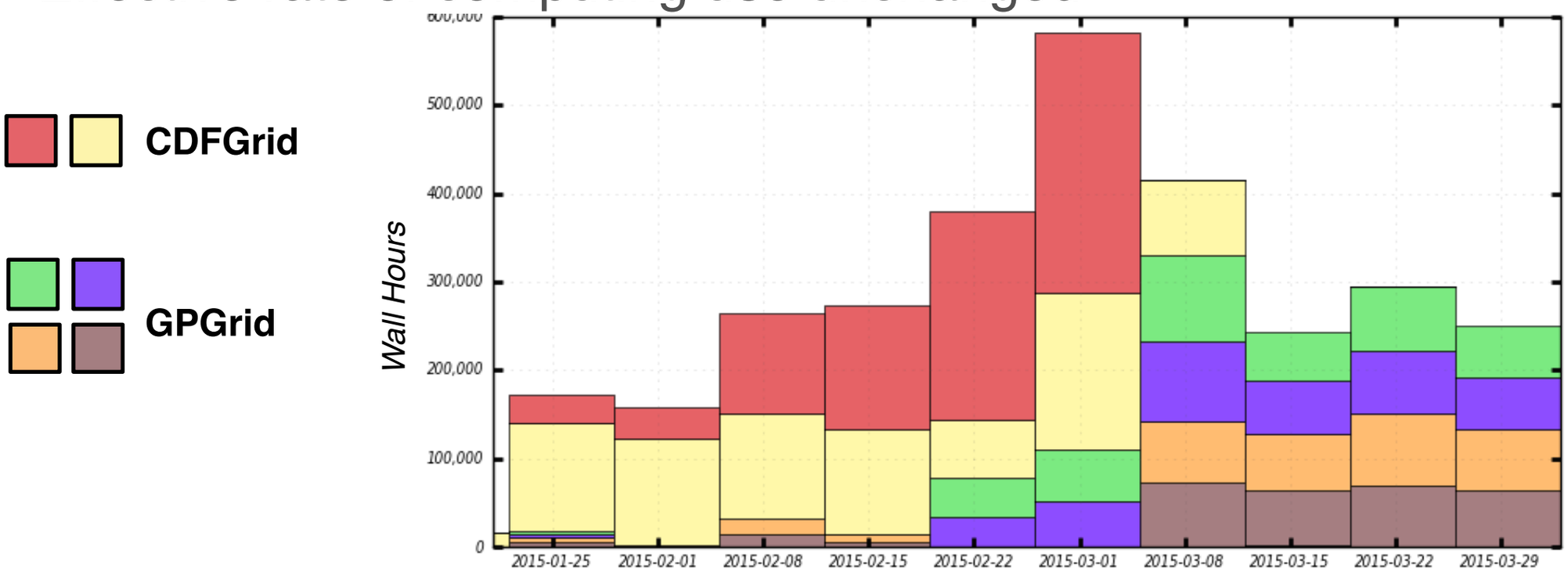

D0 Distributed Computing

- D0 has a PBS-based job submission system
  - Most user analysis goes to the “Central Backend” (CAB)
  - Simulation workload has dedicated grid entry point (SAMGrid)

- Dedicated resources (CAB and SAMGrid) that are retired are not replaced

- Adapt IF job submission infrastructure to use GPGrid
  - Requires modifications to submission scripts on interactive nodes and to internal software environment
  - Dedicated D0 storage elements (often used for job output storage) not mounted on these worker nodes
  - Input file delivery, previously via dedicated caches has changed to using IF tools

Documentation

- Large internal (~10k for CDF, ~6k for D0) note catalogs
  - Migrate internal note repositories to Inspire
    - D0 migration complete, CDF migration ~60% complete
  - Early notes only exist on paper
    - Large effort to scan these (completed)
- Much remaining documentation is a patchwork of webpages
  - Keep as much of this as possible
  - Twiki/wiki pages converted to static HTML
- ~950 thesis records for both experiments
  - Electronic versions maintained at Fermilab for nearly all

Tevatron Impact Symposium, 6/11/2012

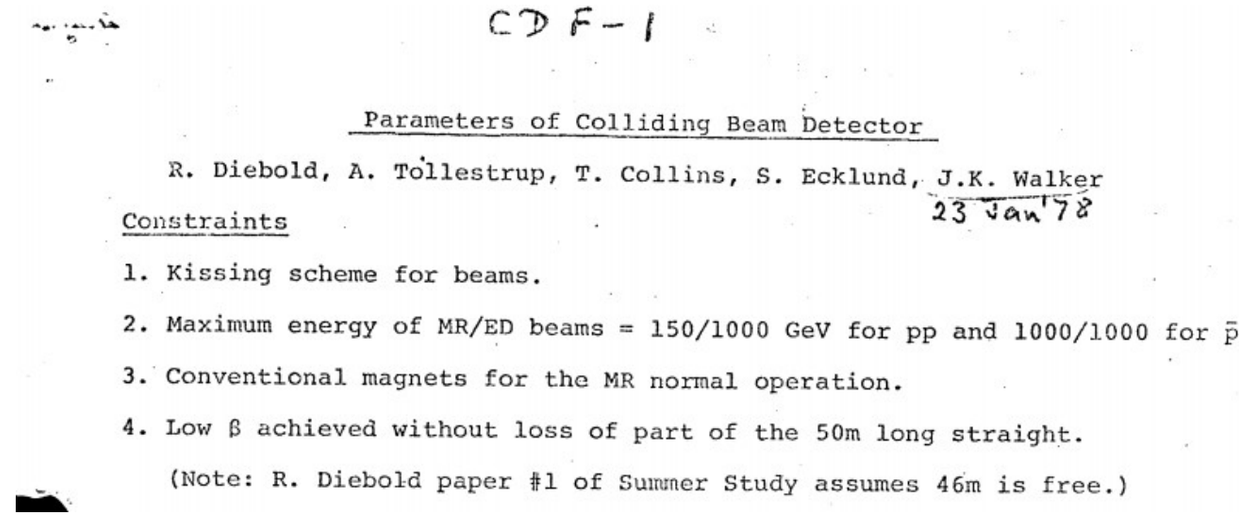
CDF-1

Parameters of Colliding Beam Detector

R. Diebold, A. Tollestrup, T. Collins, S. Ecklund, J.K. Walker

23 Jan '78

Constraints

1. Kissing scheme for beams.
2. Maximum energy of MR/ED beams = 150/1000 GeV for pp and 1000/1000 for $\bar{p}$
3. Conventional magnets for the MR normal operation.
4. Low β achieved without loss of part of the 50m long straight.

(Note: R. Diebold paper #1 of Summer Study assumes 46m is free.)

Conclusion

- Tevatron Run 2 data preservation project completed
  - Some work still being done at the experiment level to ensure data access and usability
  - Maintain computing resources necessary to allow physicists to access and use CDF and D0 data for physics analysis through 2020
  - Practical future use case: *If a discovery is made at the LHC that in hindsight could be confirmed with Tevatron data, could we make such a confirmation?*

- Physics output from the Tevatron experiments continues
  - In many cases already using the DP infrastructure