Science & Technology Facilities Council

The PERCIVAL CMOS Image Sensor

Pixelated Energy Resolving CMOS Imager Versatile and Large

I. Sedgwick / Renato Turchetta
STFC – Rutherford Appleton Laboratory
iain.sedgwick@stfc.ac.uk / renato.turchetta@stfc.ac.uk
www.dsc.stfc.ac.uk/cmossensors
On behalf of the Percival collaboration

Science & Technology Facilities Council

OUTLINE

APPLICATION

SENSOR

CHARACTERISATION RESULTS

CONCLUSIONS

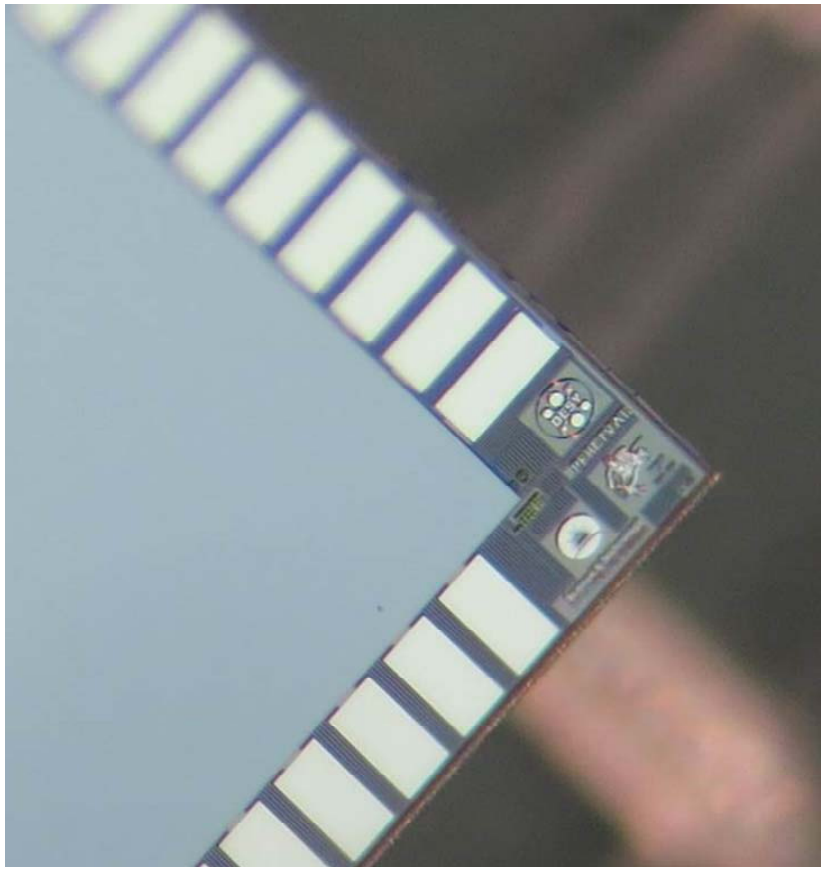

Back-Side Illuminated (BSI) wafer-scale sensor prototype

THE TEAM …

Rutherford Appleton Laboratory (STFC – RAL, UK)

Dipayan Das, Nicola Guerrini, Ben Marsh, Iain Sedgwick, Tim Nicholls, Renato Turchetta

Deutsches Elektronen-Synchrotron (DESY, Germany)

Matthias Bayer, Jonathan Correa, Peter Gottlicher, Heinz Graafsma*, Sabine Lange, Helmut Hirsemann, Alessandro Marras, Igor Shevyakov, Sergej Smoljanin, Michele Viti, Cornelia Wunderer, Qingqing Xia, Manfred Zimmer

Diamond Light Source (DLS, UK)

Julien Marchal, Ulrik Pedersen, Nick Rees, Nicola Tartoni

Elettra – Sincrotrone Trieste (Elettra, Italy)

Giuseppe Cautero, Dario Giuressi, Ralf Menk, Luigi Stebel, Hazem Yousef

* also with Midsweden University, Sweden

DESY diamond Elettra Sincrotrone Trieste Science & Technology Facilities Council

… AND THEIR ROLES

- Rutherford Appleton Laboratory – Sensor Design and Characterisation
- DESY – Electronics and Characterisation
- Elettra – Electronics and Software
- Diamond Light Source – DAQ

} Users

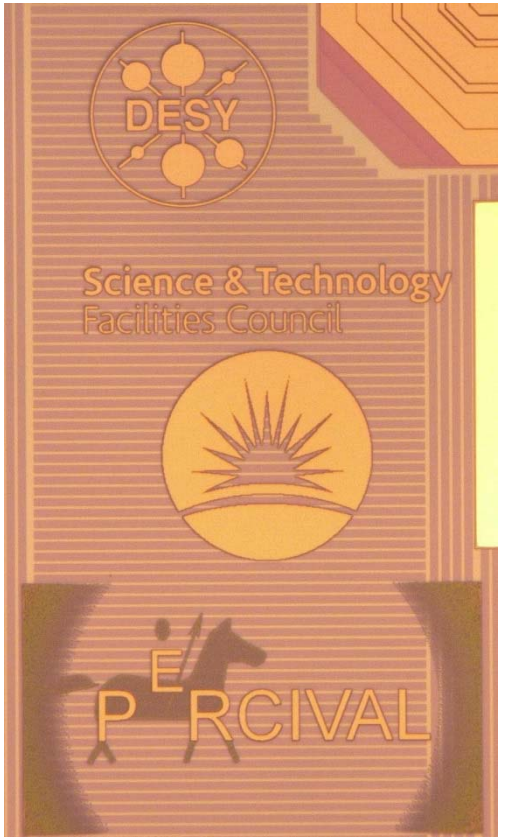

Final goal

To develop a wafer scale, high frame rate CMOS imager for low energy X-Ray detection

PERCIVAL – Pixelated Energy Resolving CMOS Imager, Versatile and Large

THE APPLICATION

- Synchrotrons and FELs have increasing brilliance
- Users are keen to take advantage of this whilst retaining single photon sensitivity

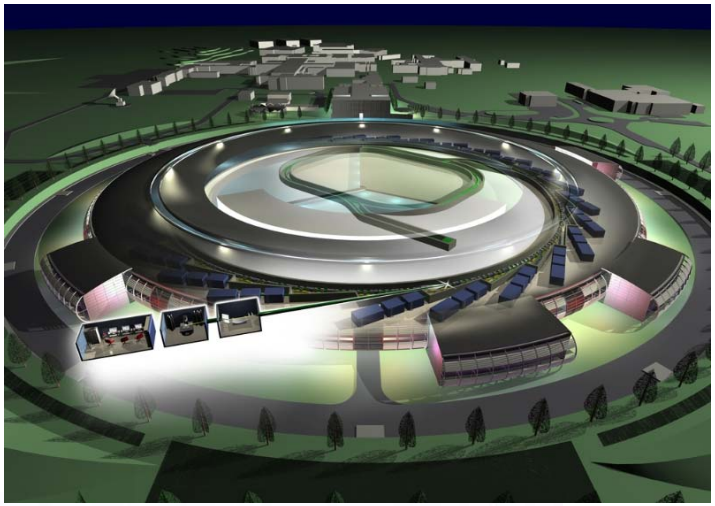

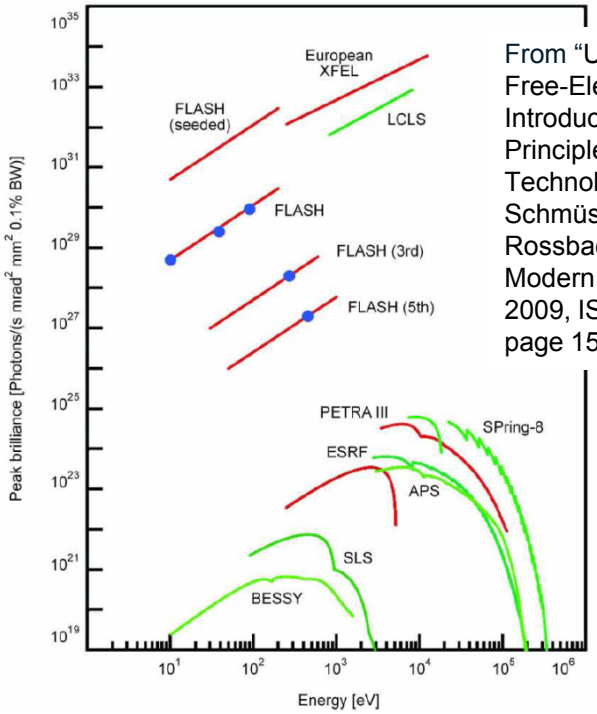

From "Ultraviolet and Soft X-Ray Free-Electron Lasers: Introduction to Physical Principles, Experimental Results, Technological Challenges"; Peter Schmüser, Martin Dohlus, Jörg Rossbach; Springer Tracts in Modern Physics, Volume 229 2009, ISBN: 978-3-540-79571-1, page 150

Image Credit: http://www.elettra.trieste.it/FERMI/
Image Credit: http://flash.desy.de/

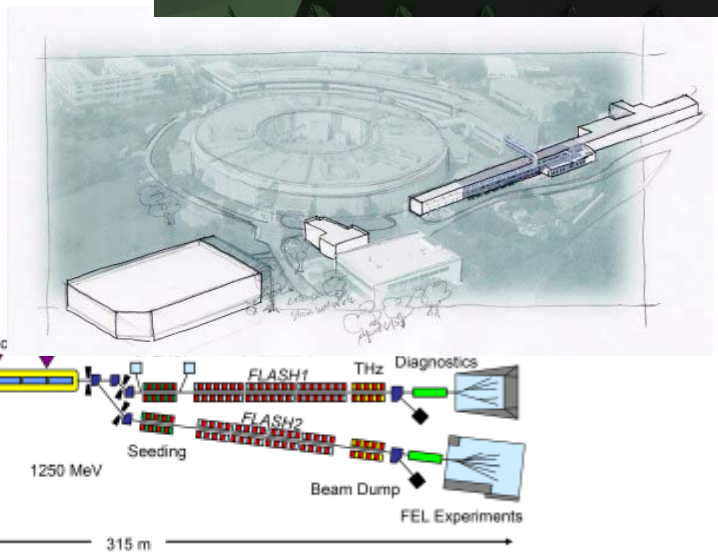

Image Credit: http://www.diamond.ac.uk/PressOffice/MediaResources.html

USER REQUIREMENTS

- Energy range (<200 eV –) 250 eV – 1 keV (- few keV)
- minimum 1k x 1k (more is better!) pixels ⇒ 4k x 4k pixels
- need 10 – 100 μm pixels, best <30μm
- single-photon sensitivity with low probability of false positive ⇒ low noise
- (very) high Quantum Efficiency ⇒ need > 85%, wish > 95%
- QE uniform over sensor (Bragg peaks might be sub-pixel size!)
- sensors must be 2-side buttable ⇒ can combine to form a 2x2 sensor cloverleaf
- faster frame rate is better ⇒ up to 120 fps for FEL machines

Specific to Free Electron Laser (FEL) machines

- All photons arrive in ~100fs
- Large dynamic range (10^5 photons/pixel/image good, 10^6 ph/px/image great)
- No blooming to neighbouring pixels

SENSOR SPECIFICATIONS

- Energy range ⇒ Thick epi and back-side illumination (BSI)
- minimum 1k x 1k (more is better!) pixels ⇒ 4k x 4k pixels
- need 10 – 100 µm pixels, best <30µm ⇒ 27 µm pixels

} Stitched, wafer-scale sensor

- single-photon sensitivity ⇒ low noise ⇒ ENC <~ 10-15 e- rms
- QE ⇒ need > 85%, wish > 95% ⇒ Thick epi and back-side illumination (BSI)
- QE uniform over sensor
- sensors must be 2-side buttable ⇒ pads restricted to two sides
- faster frame rate is better ⇒ 120 fps maximum frame rate ⇒ up to 2 Gpixel/sec

Specific to Free Electron Laser (FEL) machines

- All photons arrive in ~100fs ⇒ need integrating detector & 'snapshot' operation
- Large dynamic range (DR) ⇒ Full well capacity (FWC) >~ 10^7 e- ⇒ DR > 10^6
- In-pixel antiblooming

ENERGY RANGE

QE > 90% in the range from 250eV to 1keV

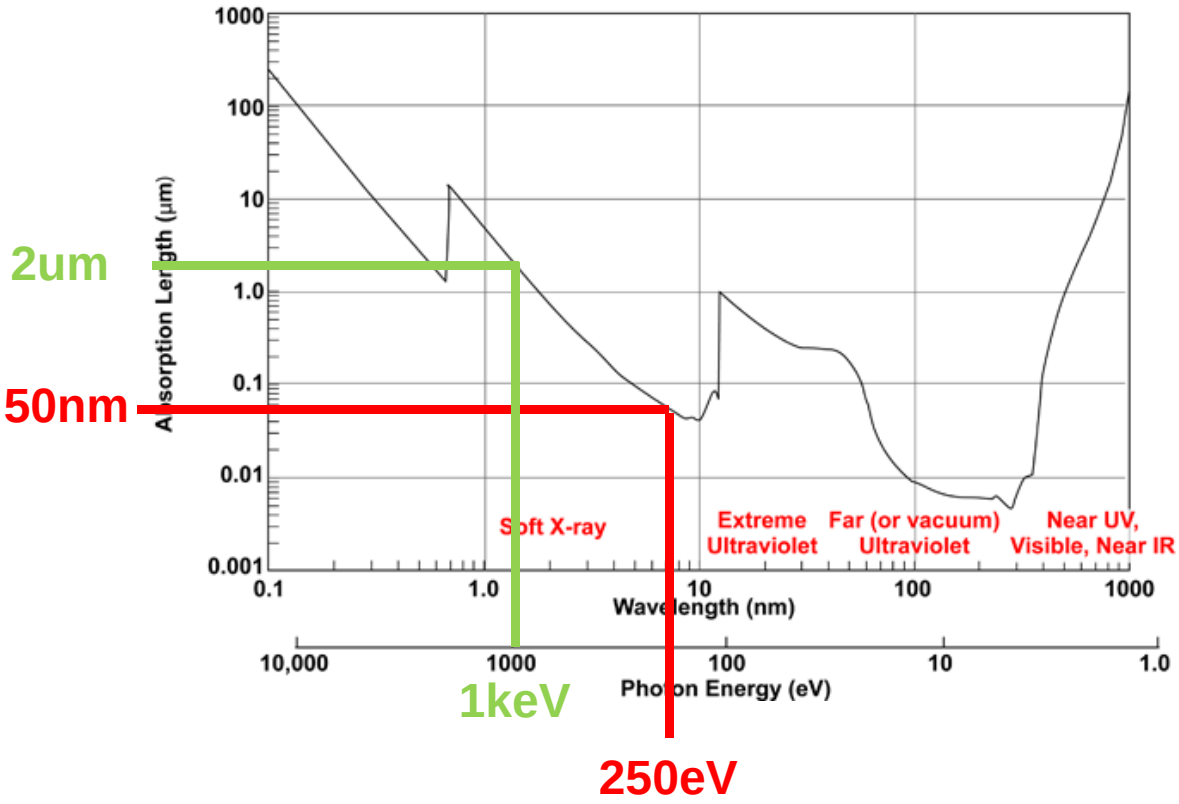

- Back-side illumination (BSI) with minimal ‘entry’ loss ⇒ low energy range
- Thick epi ⇒ high energy range
- High resistivity ⇒ high MTF (Modulation Transfer Function, aka spatial resolution) and low cross-talk

High Resistivity 18um thick epi is used

Image Credit: http://www.ll.mit.edu/mission/electronics/AIT/hisensitivityimage.html

BACK-SIDE ILLUMINATION (BSI)

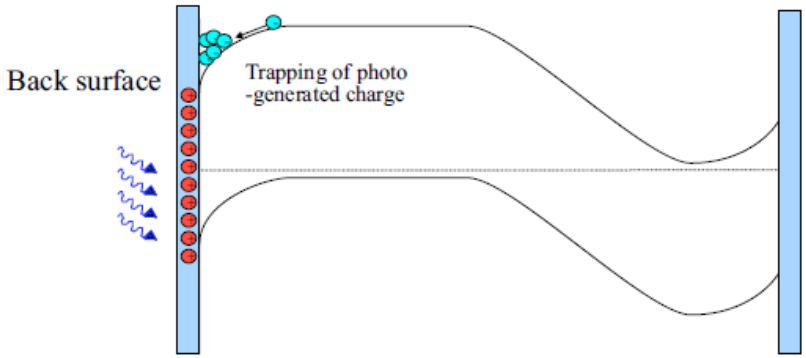

UNDOPED

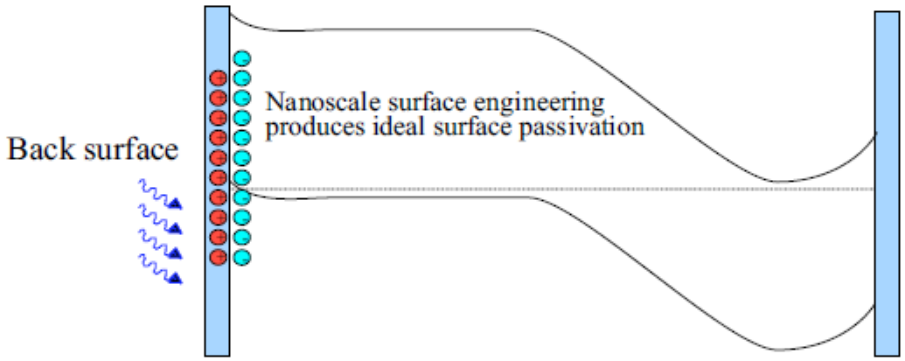

DELTA - DOPED

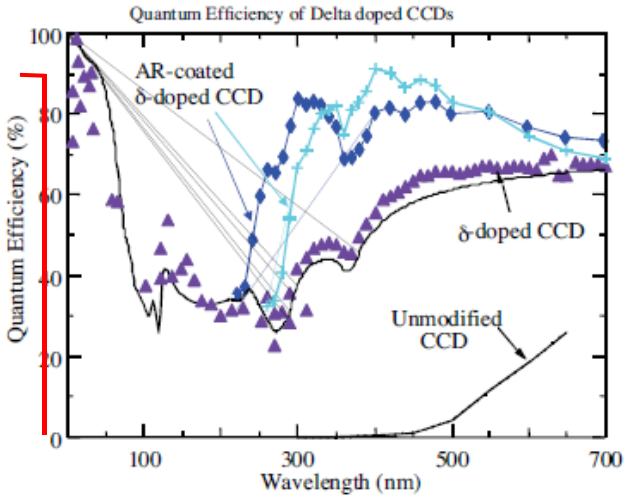

QE target close to silicon intrinsic efficiency

Reference: *Delta doping Technology for Back Illuminated CMOS and CCD Imagers*, Shouleh Nikzad, IISW 2009 Symposium on BSI

THE PIXEL

ENC <~ 10-15 e- rms < 15 e^- rms, FWC >~ 10^7 e^-

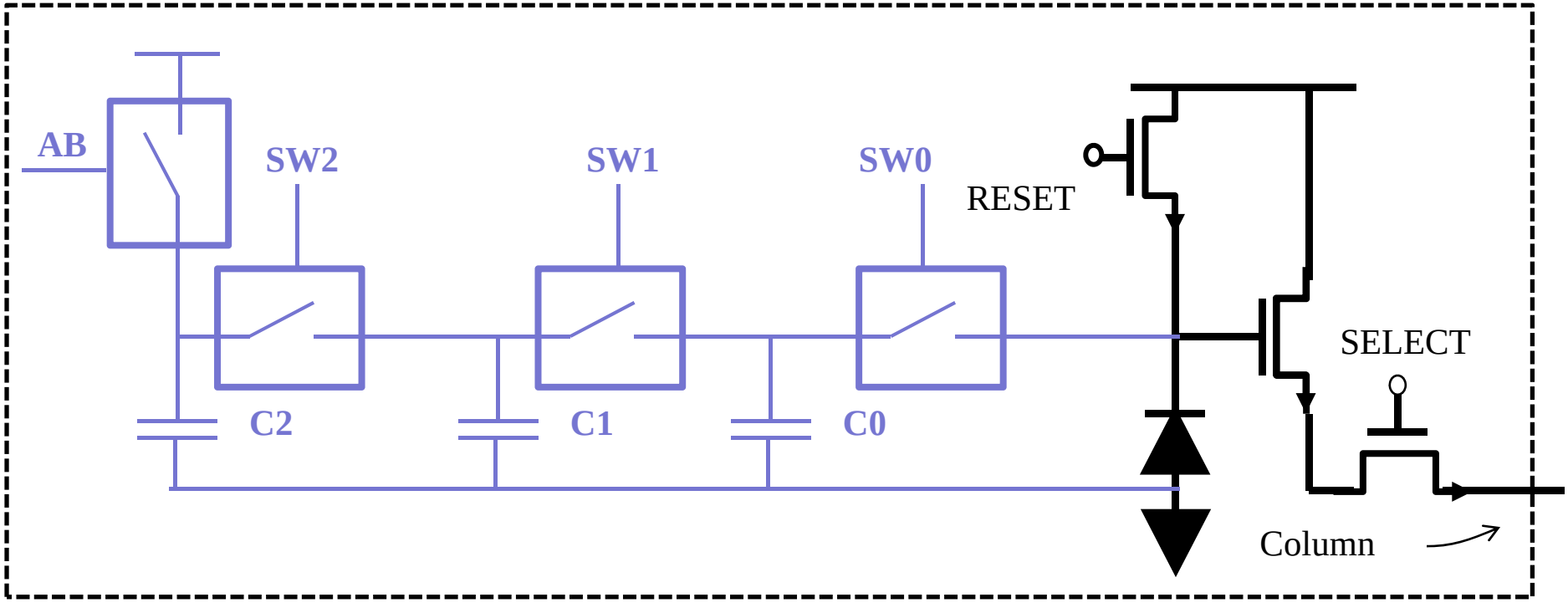

C2 > C1 > C0

Invented for this application but see also US 6888122

THE DIODE

Large pixel and low noise

In silicon: N-well and partially pinned photodiode (PPPD, see figure below)

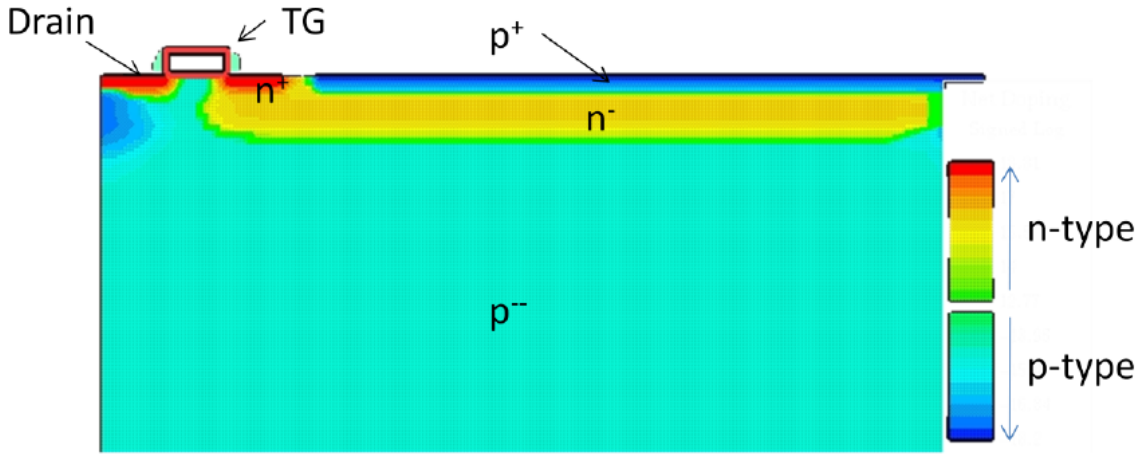

PPPD is the baseline.

A. Lahav, T. Leitner, R. Resehf, A. Fenigstein, "Enhanced X-ray CMOS Sensor Panel for Radio and Fluoro application usgin a low noise charge amplifier with a Partially Pinned PD", ISSW 2011

PIXEL OPERATION. Reset

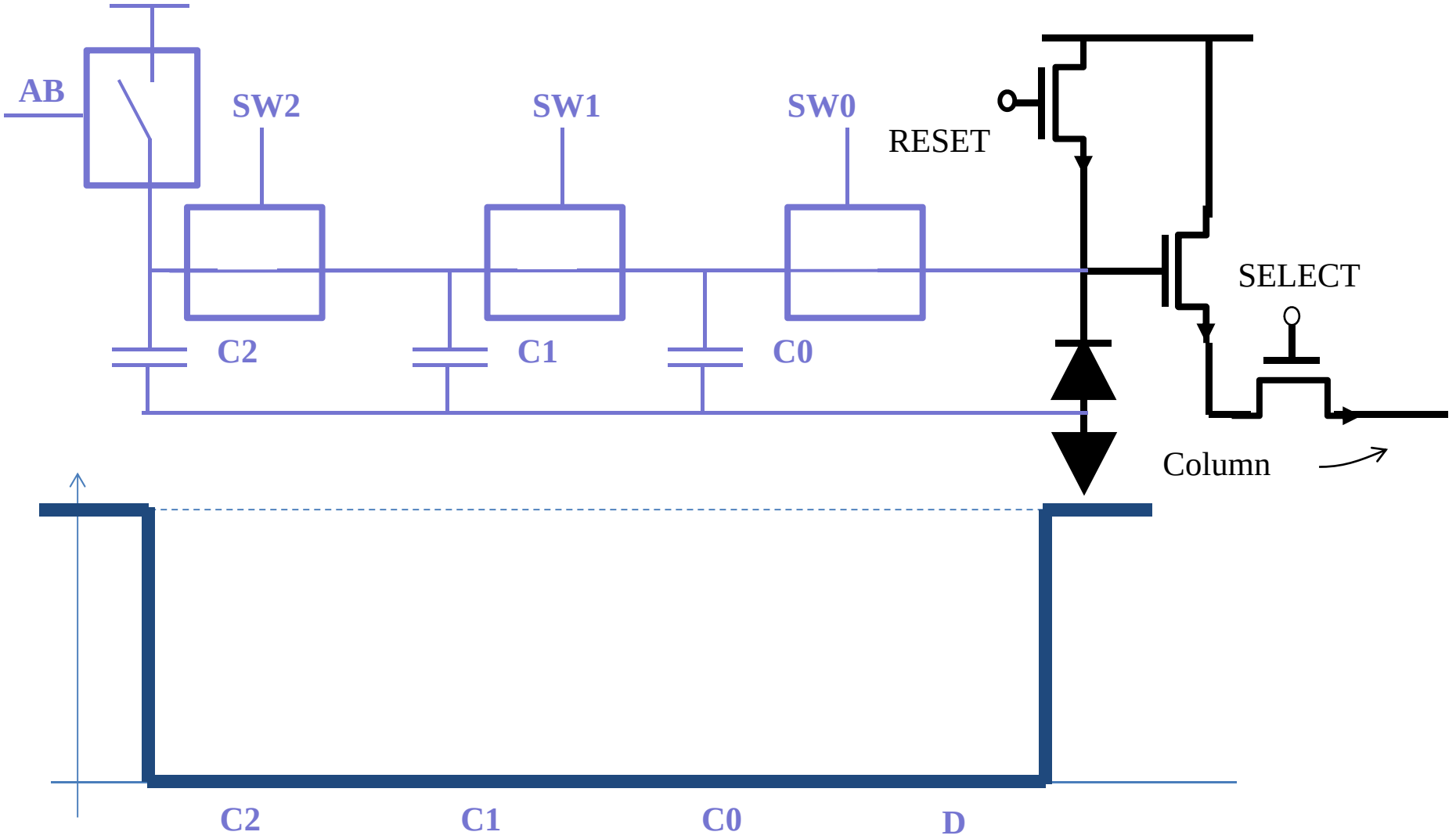

Science & Technology Facilities Council

PIXEL OPERATION. Start integration

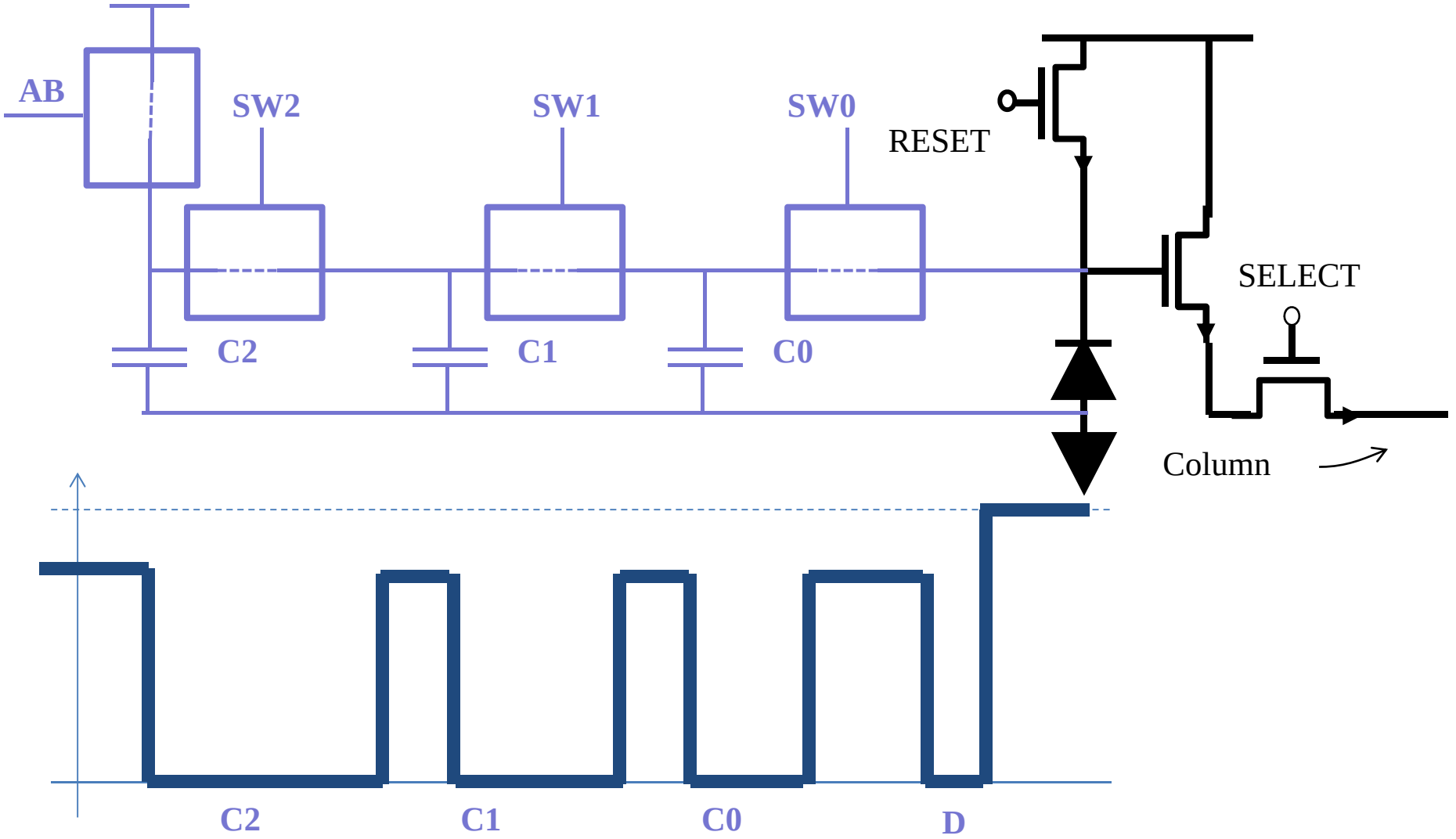

PIXEL OPERATION. Integration

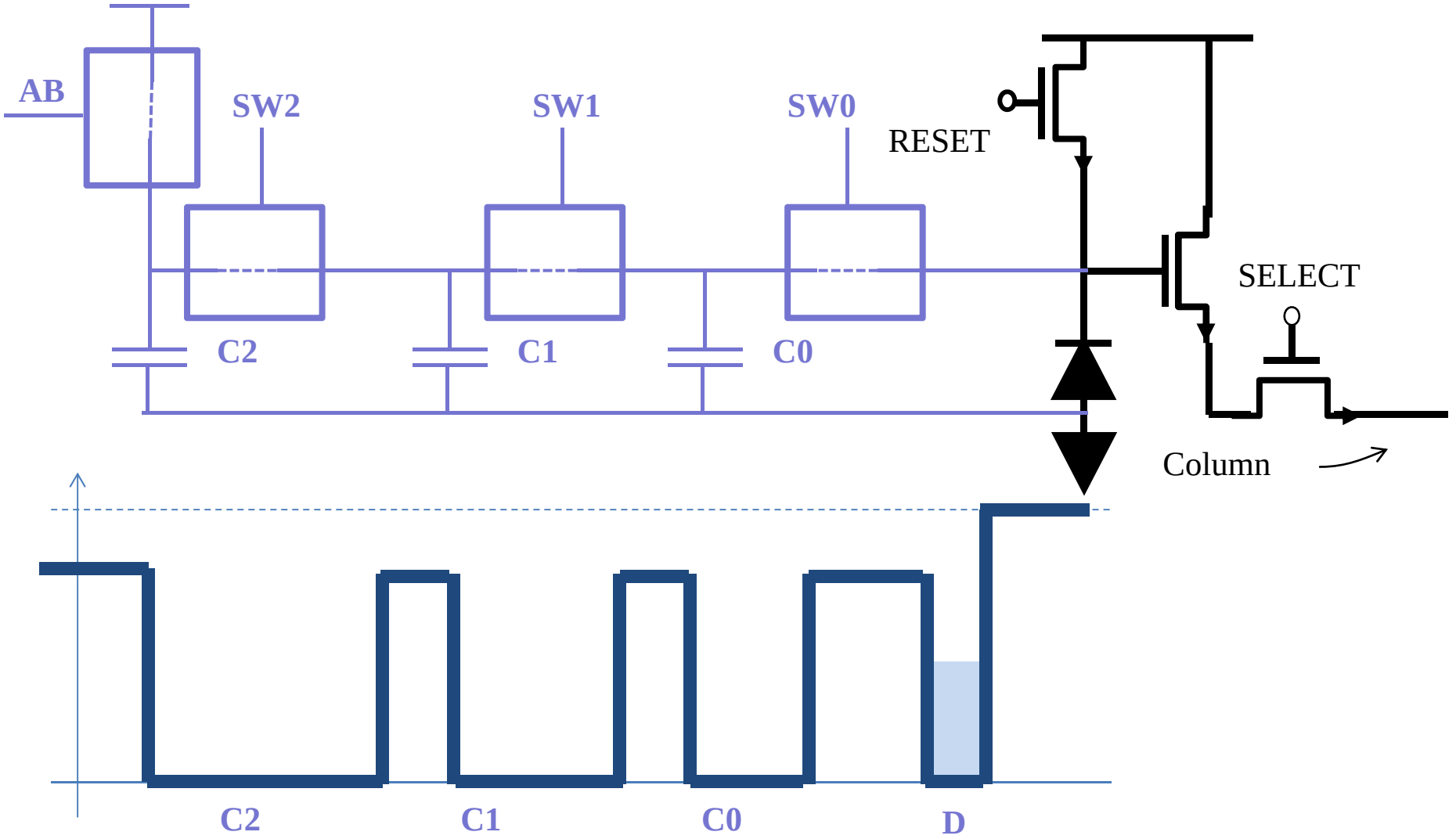

Science & Technology Facilities Council

PIXEL OPERATION. Integration

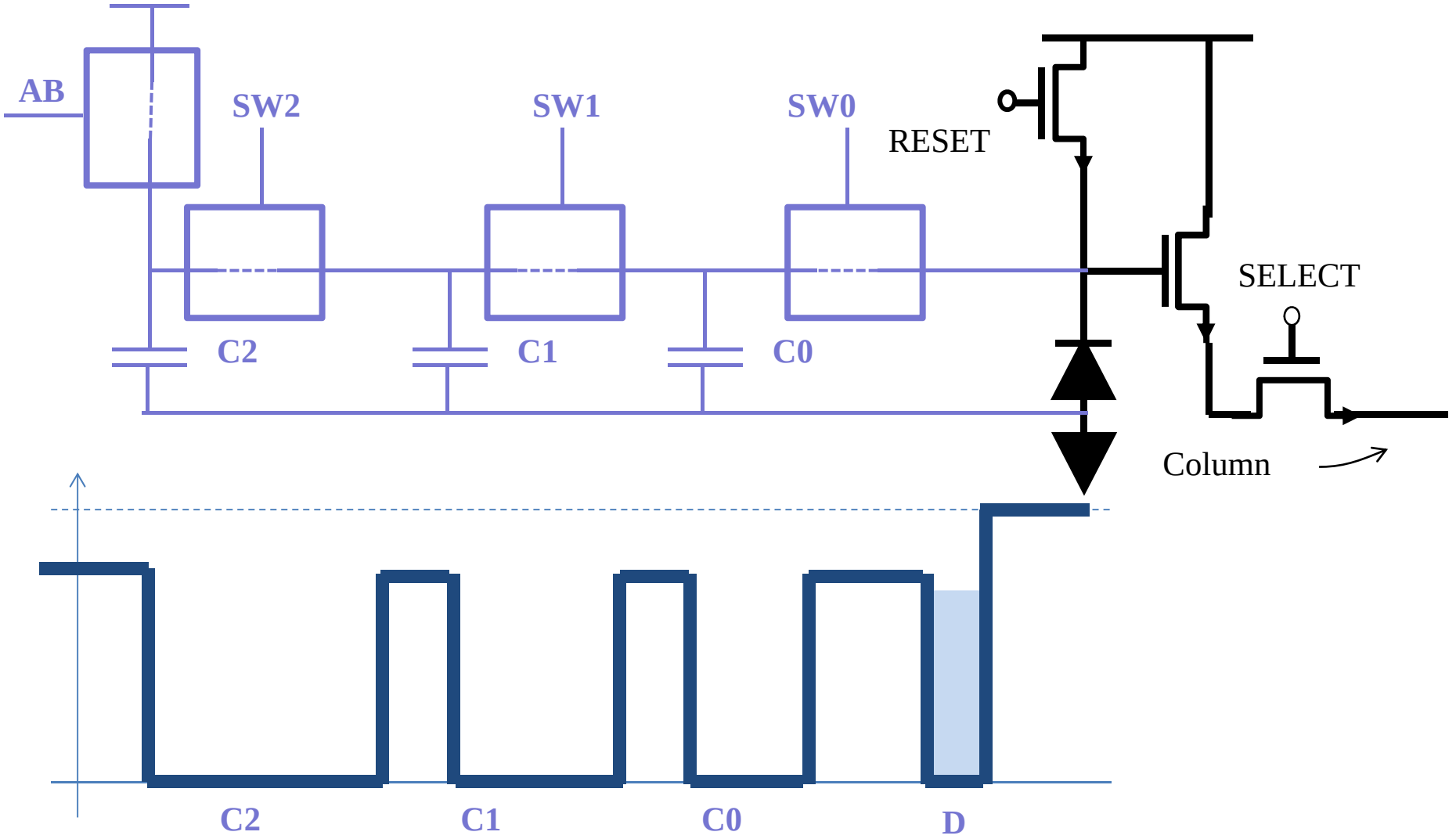

PIXEL OPERATION. Integration

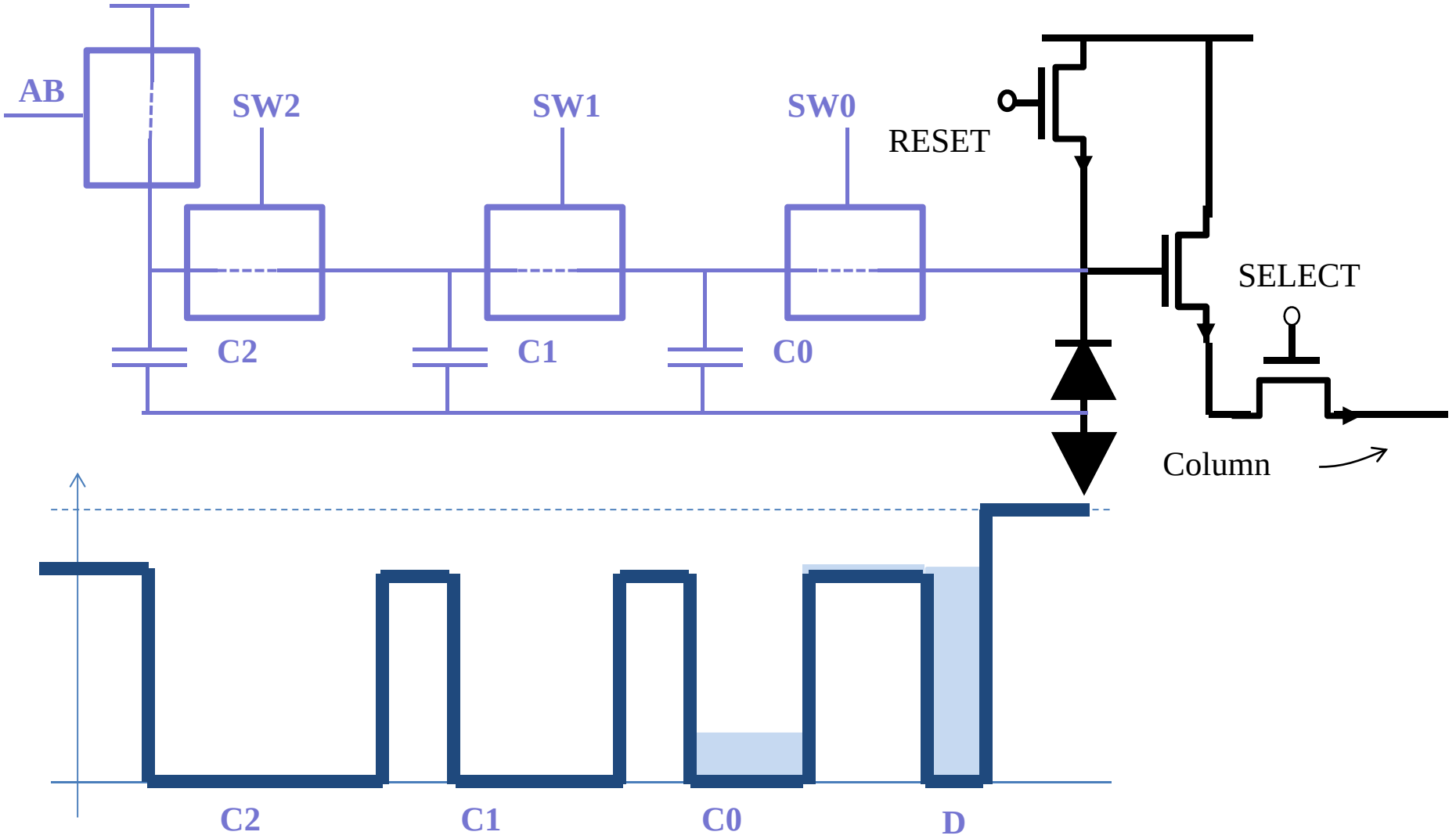

PIXEL OPERATION. Integration

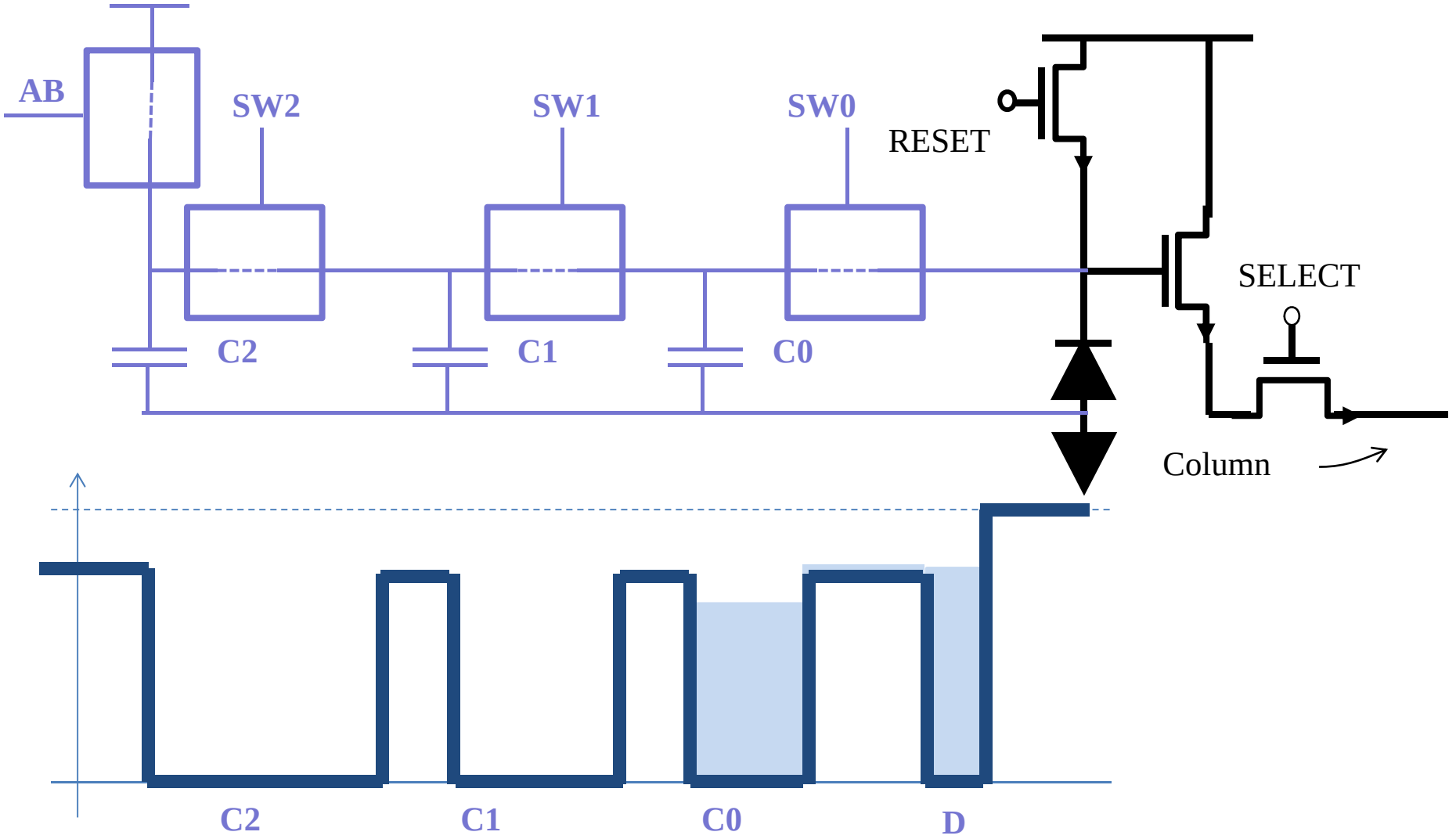

PIXEL OPERATION. Integration

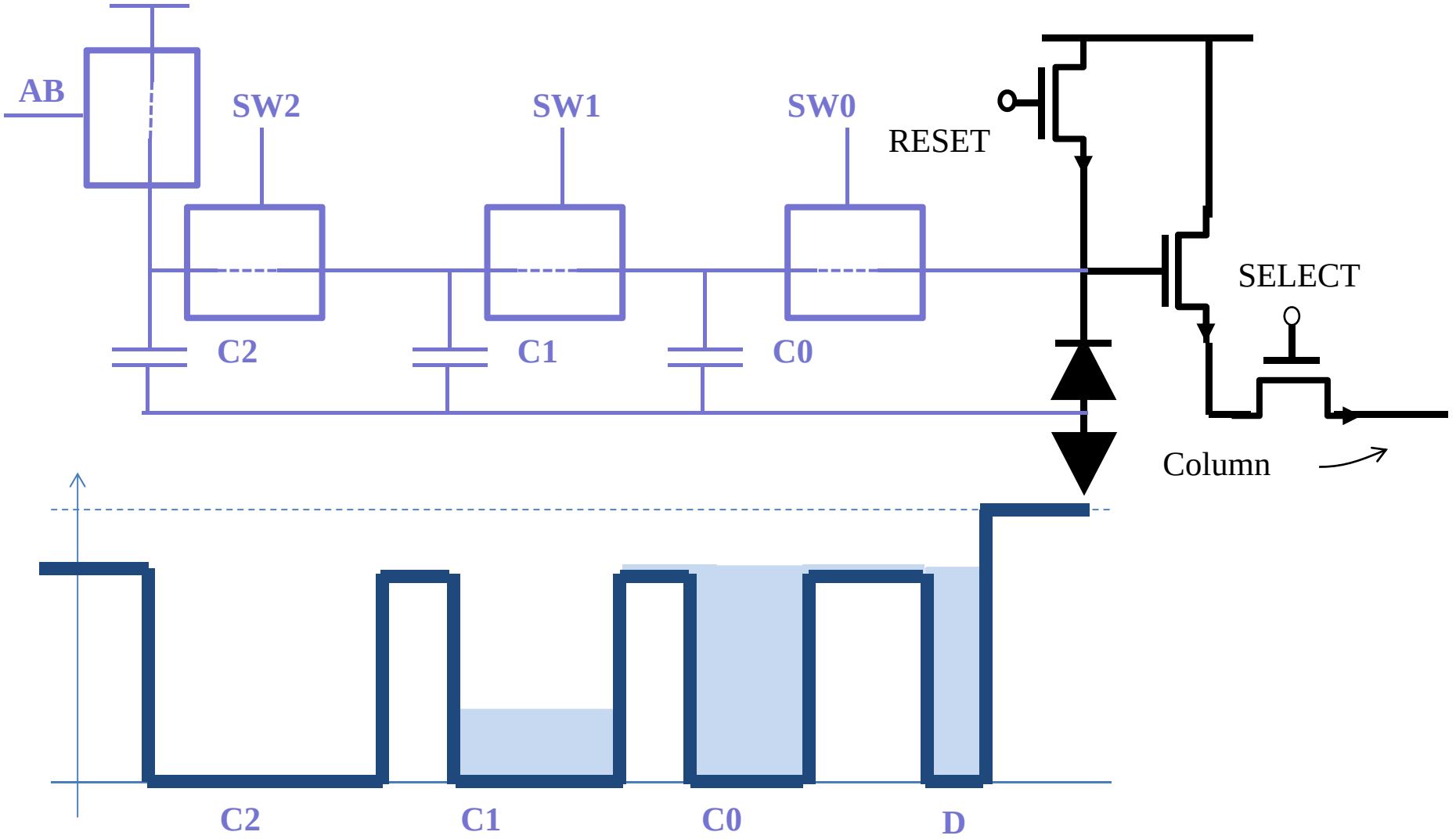

PIXEL OPERATION. Stop integration

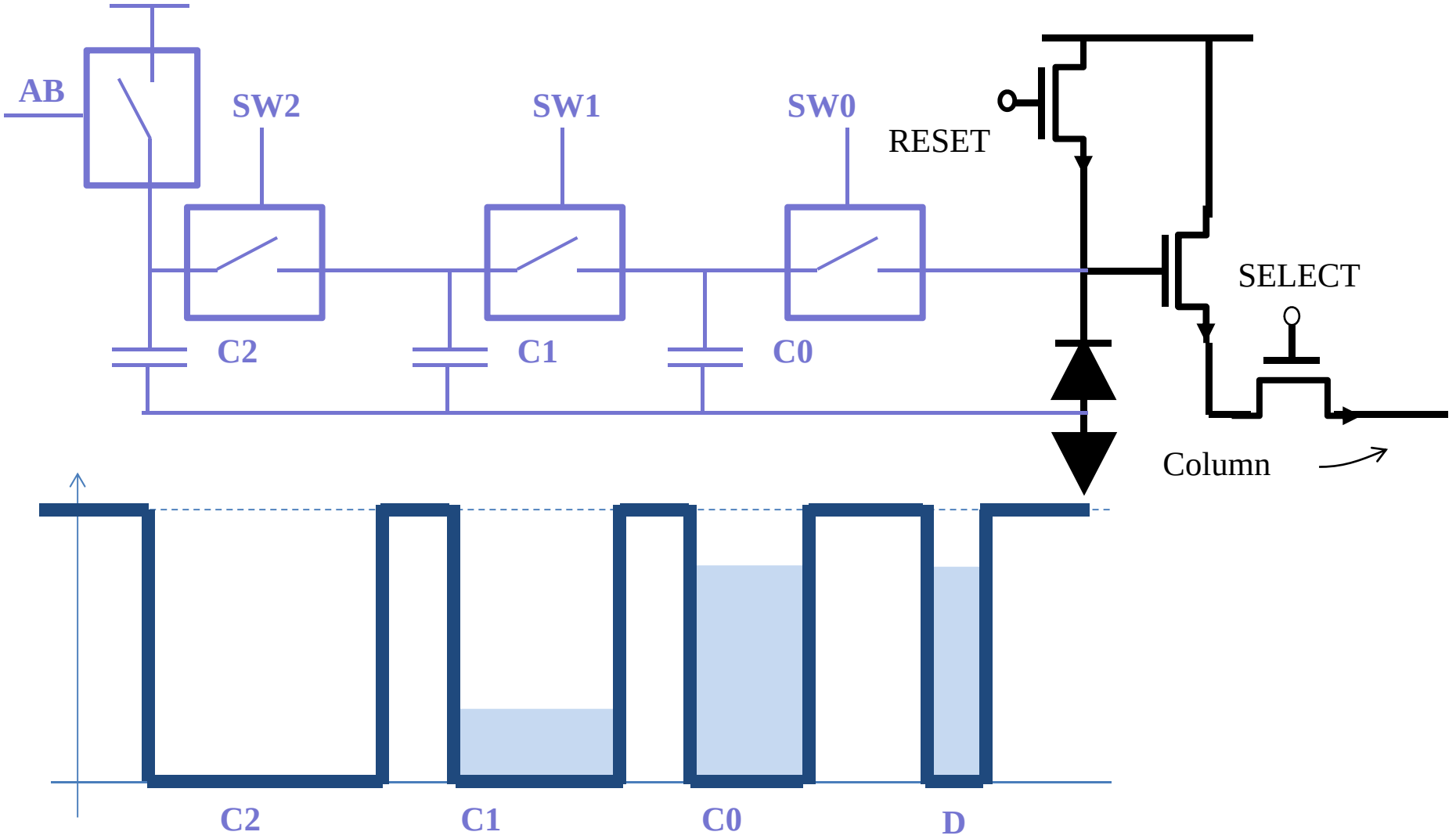

PIXEL OPERATION. Read diode

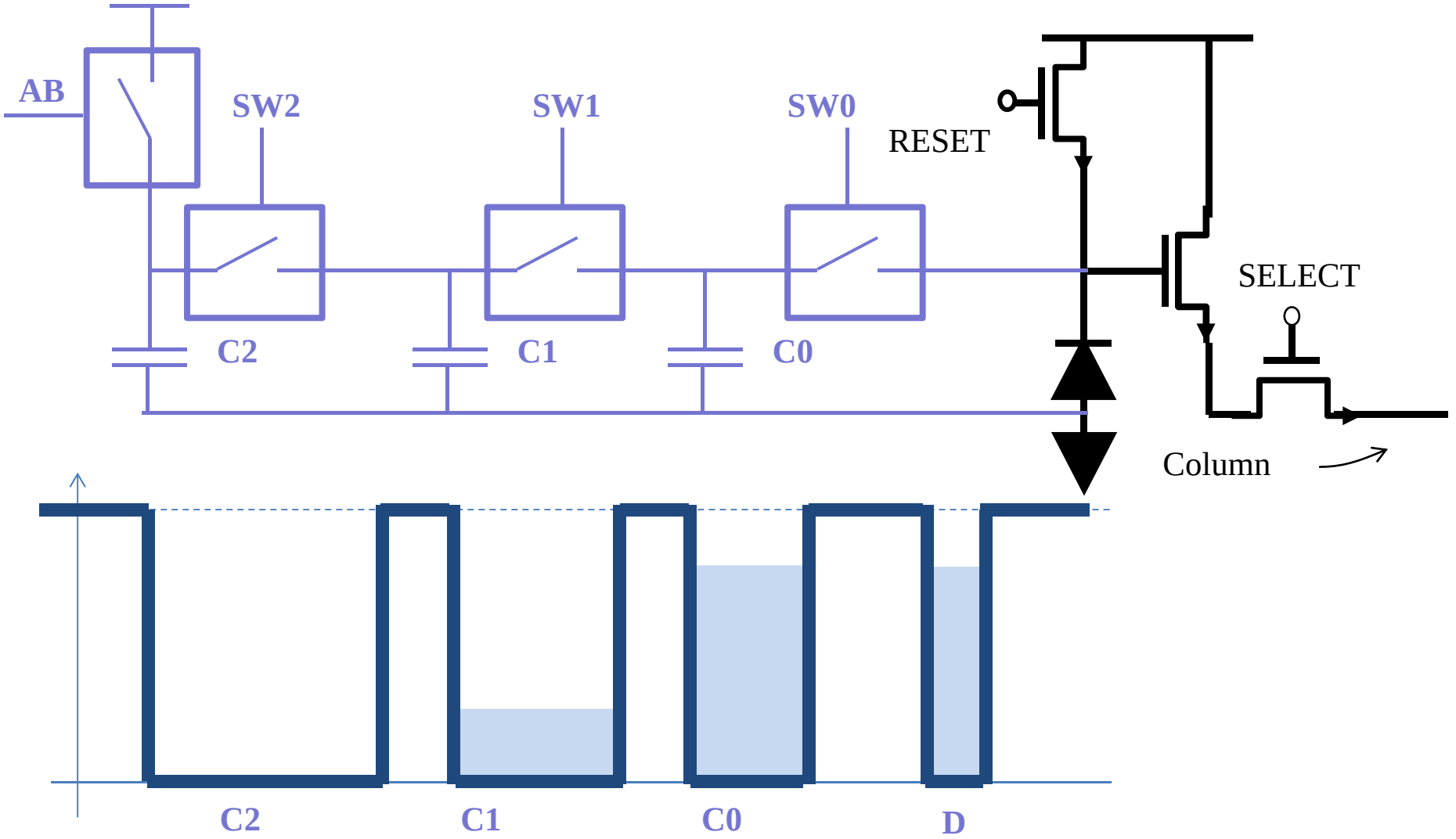

PIXEL OPERATION. Read C0

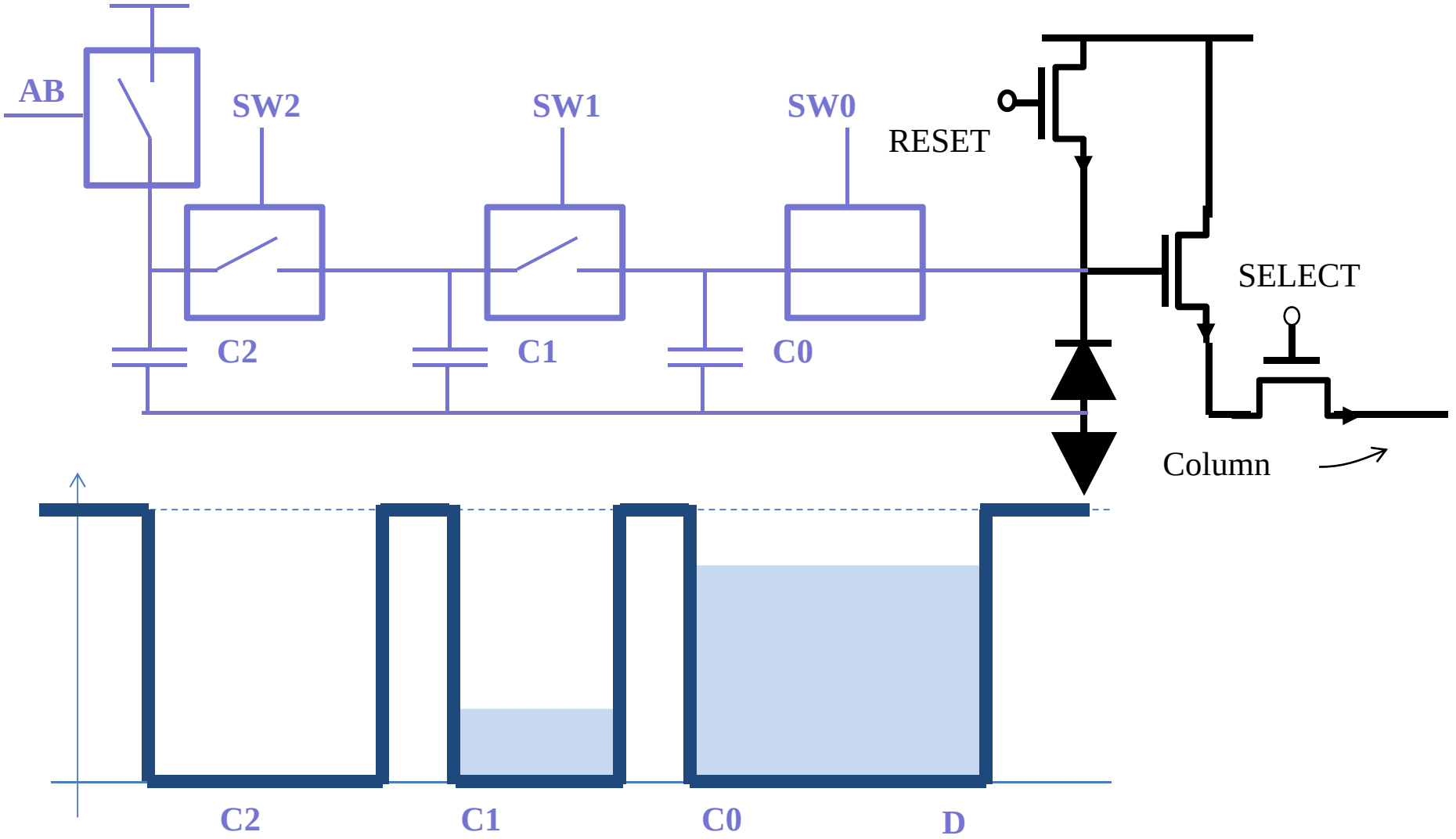

PIXEL OPERATION. Read C1

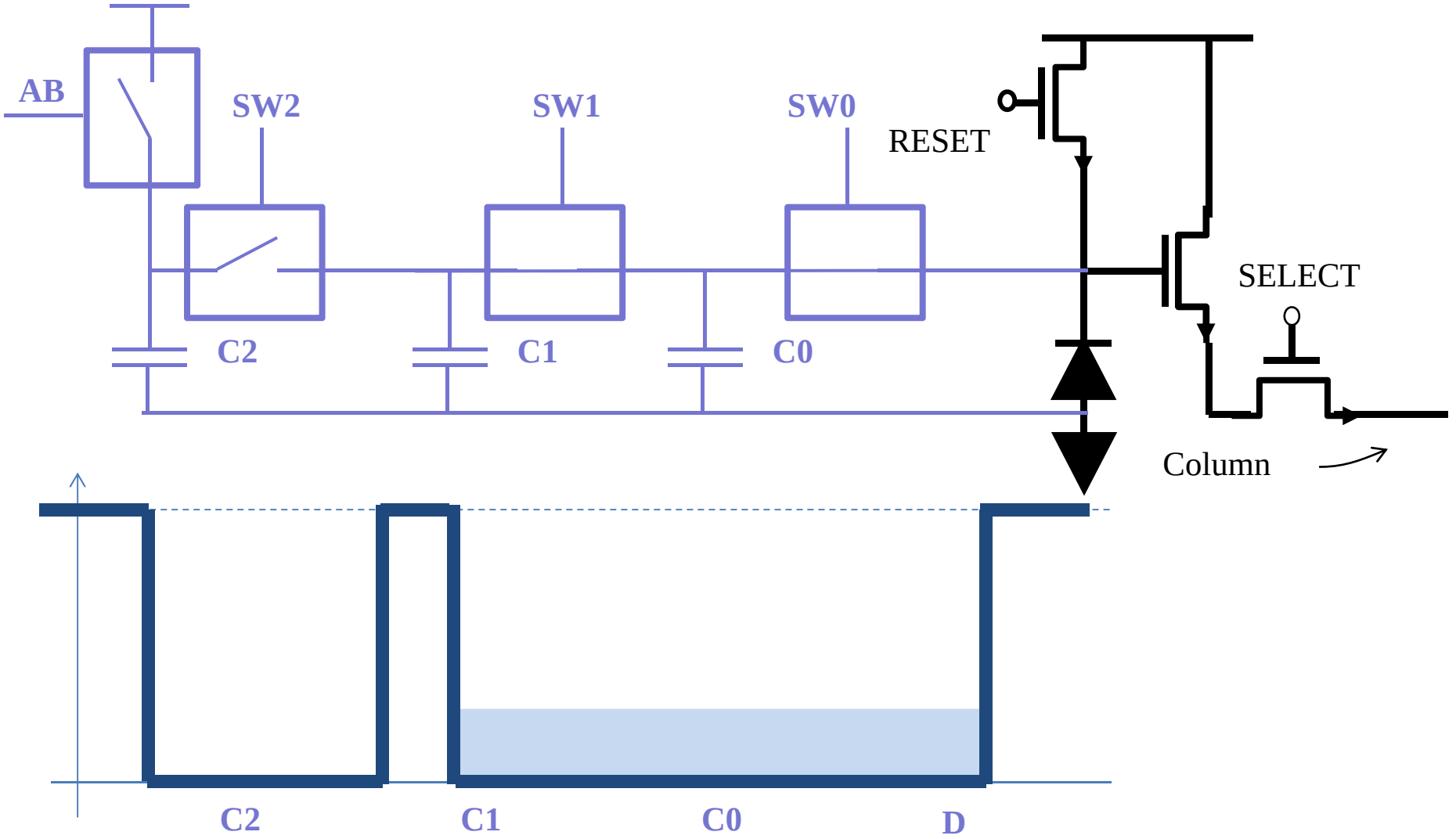

PIXEL OPERATION. Read C2

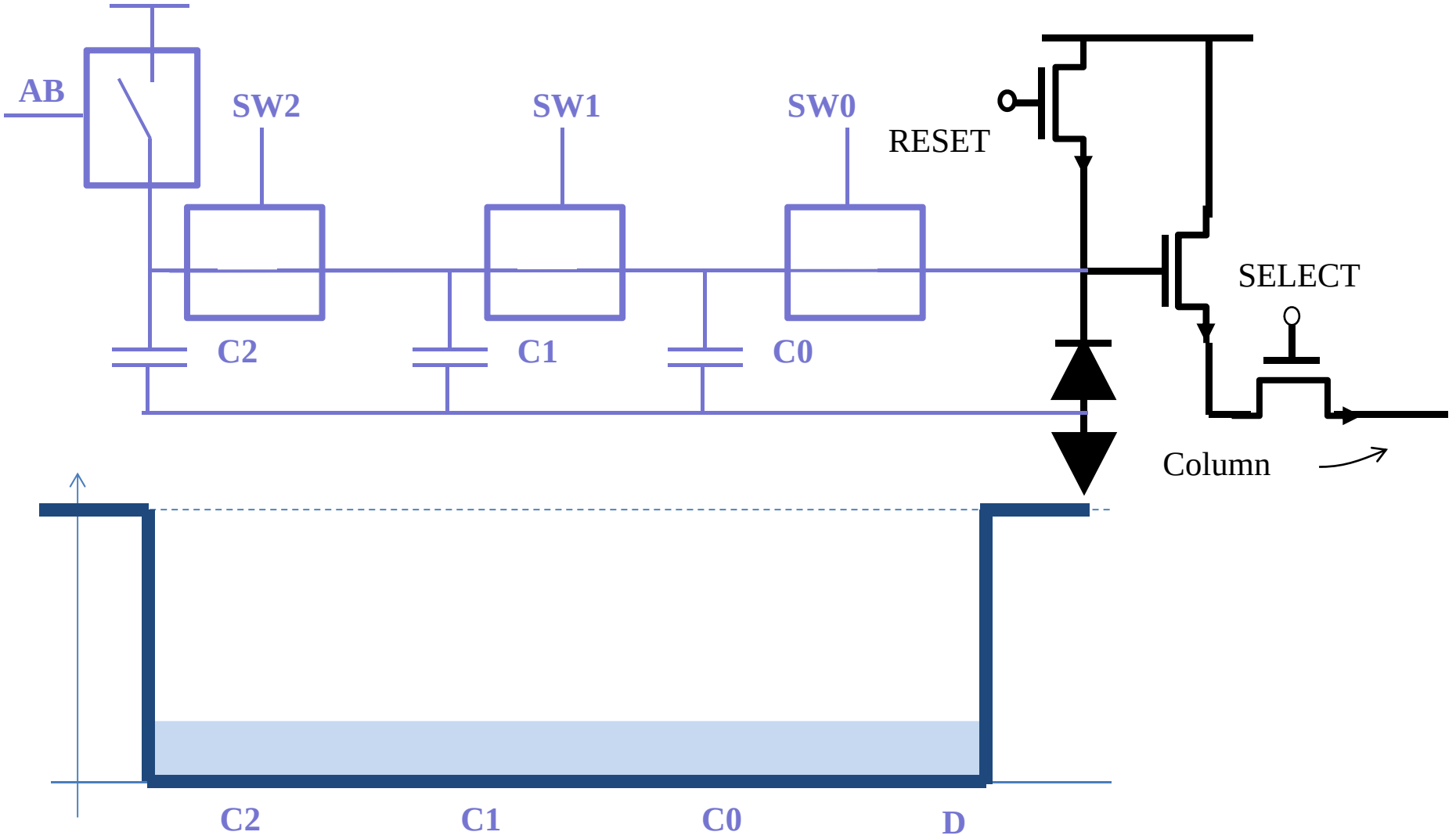

HDR PIXEL

The photon shot noise increases with the signal

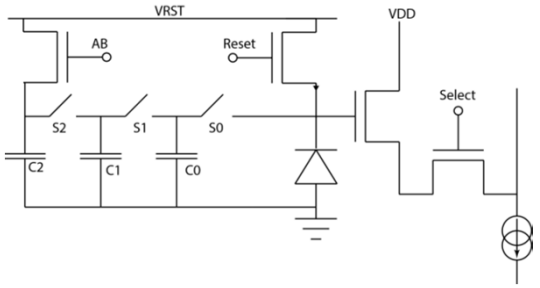

	Capacitance (arb units)	Full Well (arb units)	Input Referred Noise (arb units)
Diode	201	201000	650
C0	10	10000	50
C1	100	100000	337
C2	200	200000	650

Example SNR

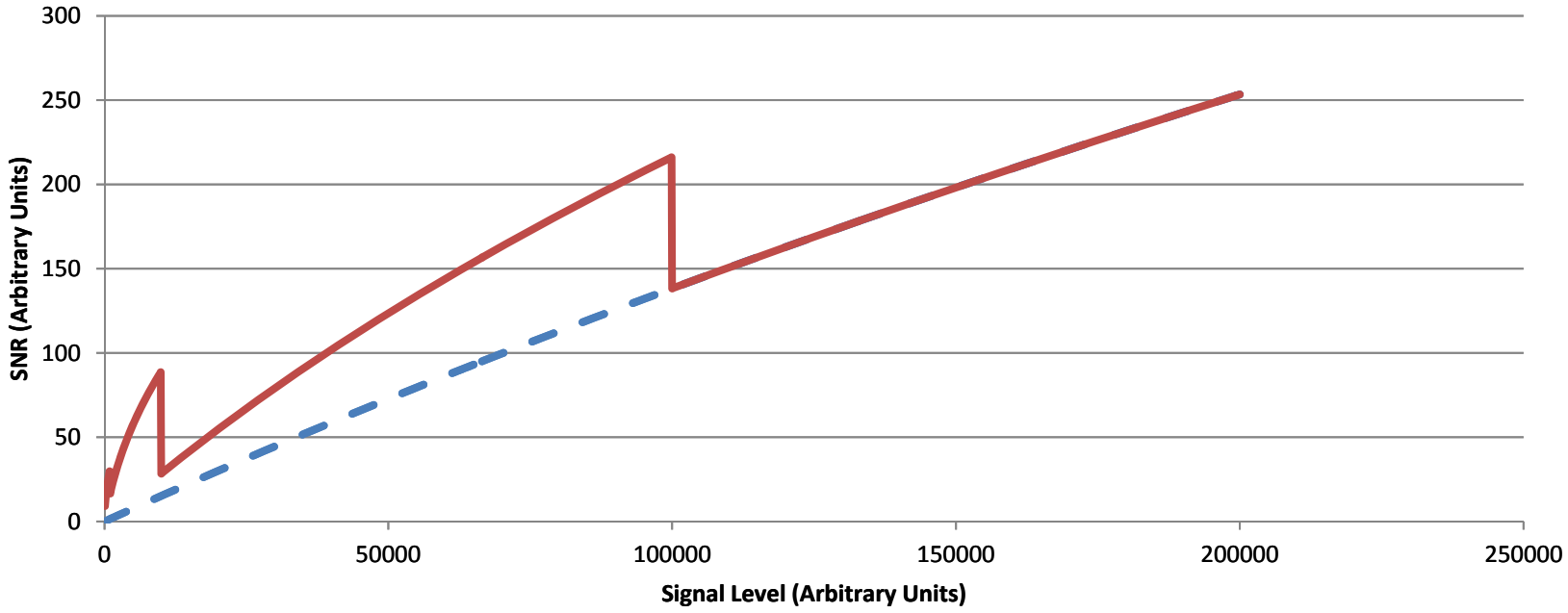

THE SAMPLING STAGE

First non-saturated sample is selected for conversion.
Reset value is also converted for digital CDS (Correlated Double Sampling)

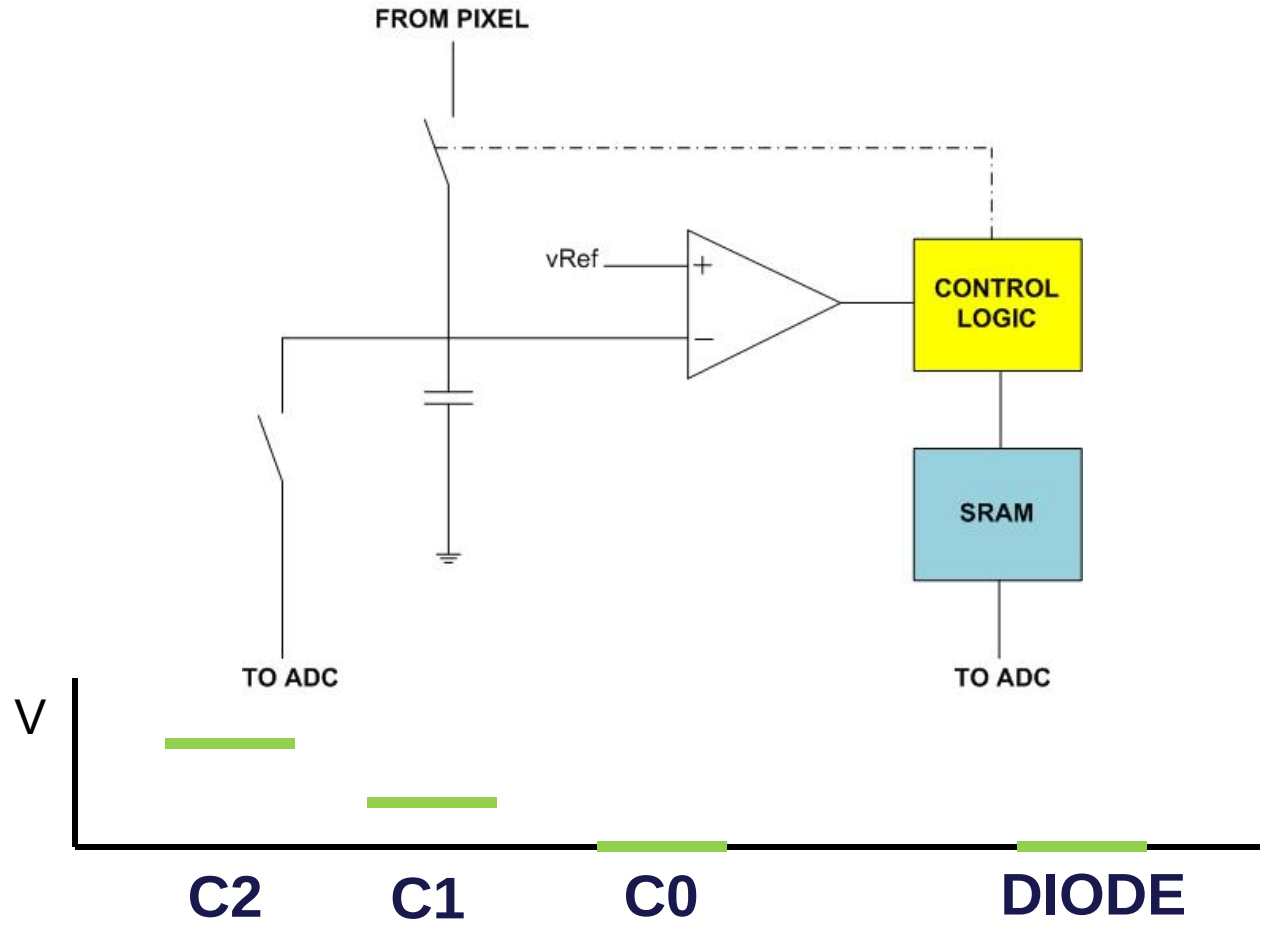

ANALOGUE-TO-DIGITAL CONVERTER

Wafer-scale sensor ⇒ compact, simple, low power

Clock distribution over long distances

Equivalent line rate @ 120 fps ⇒ 2 μs

Digital CDS → 2 conversions

12 bit resolution

Multiple ADCs per column : 7 ⇒ line rate = 14 μs

Multi-ramp ADC: Coarse conversion (5 bits) + Fine conversion (8 bits) ⇒ 12 bits + 1 overflow

Pixel data: 15 bits = 12 + 1 ADC + 2 gain

for a dynamic range of >~ 10^6, i.e. 20 bits

A2D CONVERTER

Clock frequency = 30 MHz

Seven 12-bit ADC per column

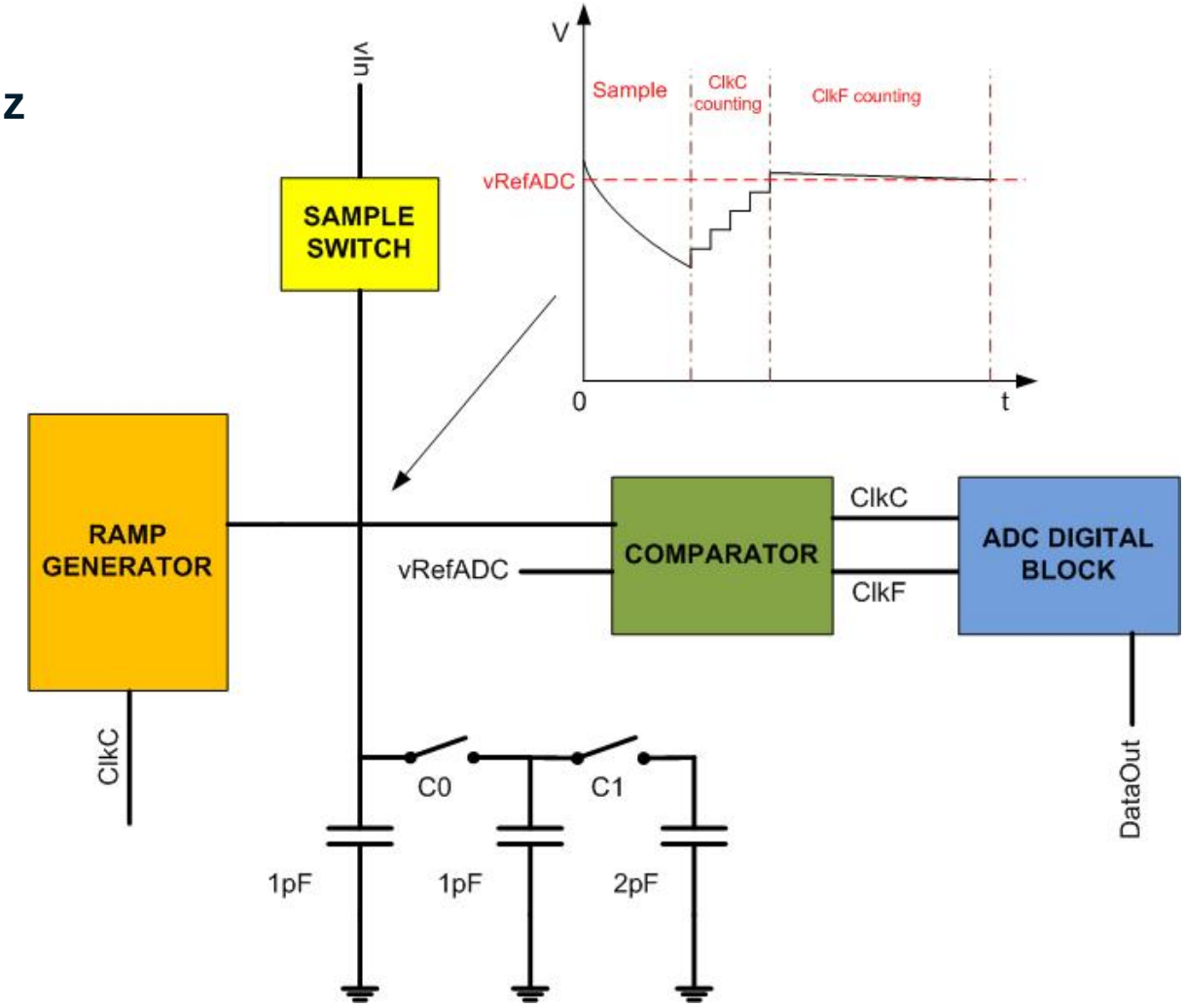

PHOTON TRANSFER CURVE (PTC)

TS1/2

- Detailed optical Characterisation focuses on individual gains – mainly the diode so far, using the Photon Transfer Curve (PTC) method

- Front Side Illuminated (FSI) and Back Side Illuminated (BSI) devices being characterised

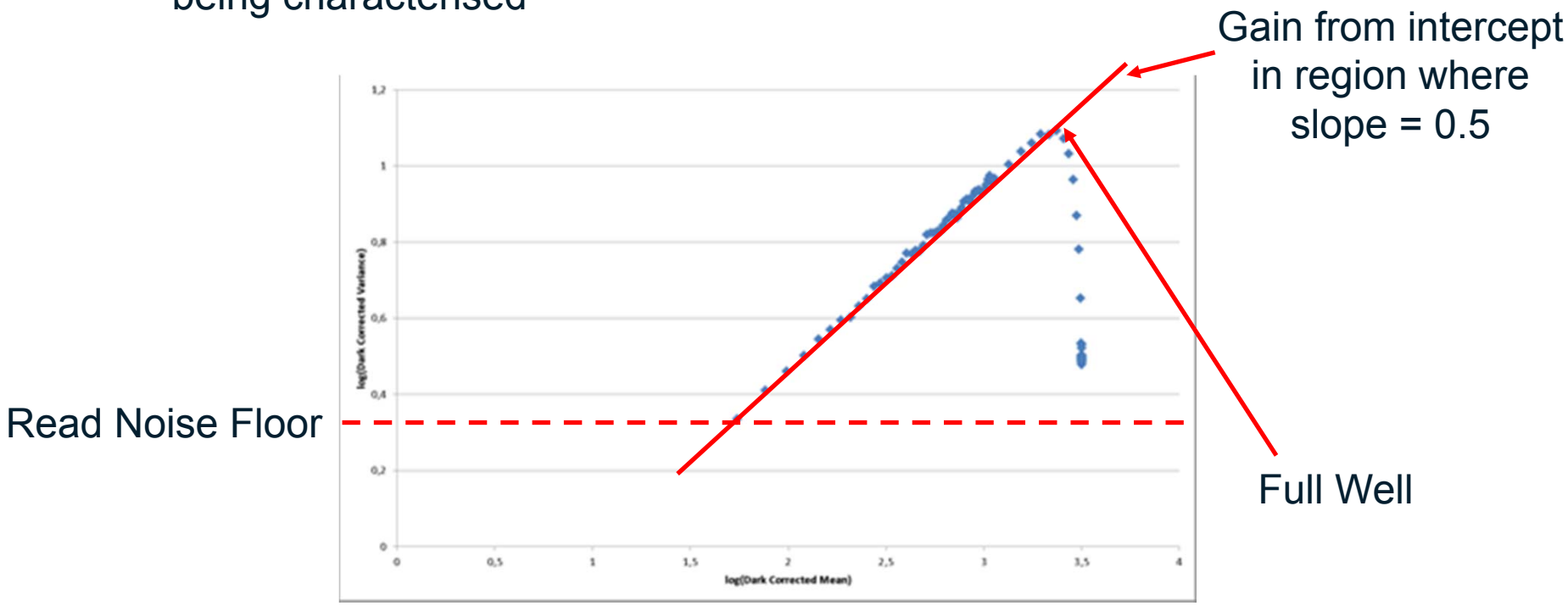

CHARACTERISATION

Measure	Result
Noise - diode (e-)	26
Linear Full Well – diode (ke$^-$)	31.0
Max Full Well – diode (ke$^-$)	40.0
Full Well – C0 (ke$^-$)	300
Full Well – C1 (Me$^-$)	7
Full Well – C2 (Me$^-$)	20
Gain (ADU/e-)	0.08

TS1 Pixel Type A (FSI)

Measure	Result
Noise (e-)	18
Linear Full Well – diode (ke-)	17.9
Max Full Well – diode (ke-)	26.4
Gain (ADU/e-)	0.111

TS1 Pixel Type D (FSI)

Measure	Result
Noise (e-)	21.9
Linear Full Well – diode (ke$^-$)	17.7
Max Full Well – diode (ke$^-$)	19.4
QE @ 540nm (%)	45.9
Gain (ADU/e-)	0.108

TS1 Pixel Type D (BSI)

HDR PIXEL

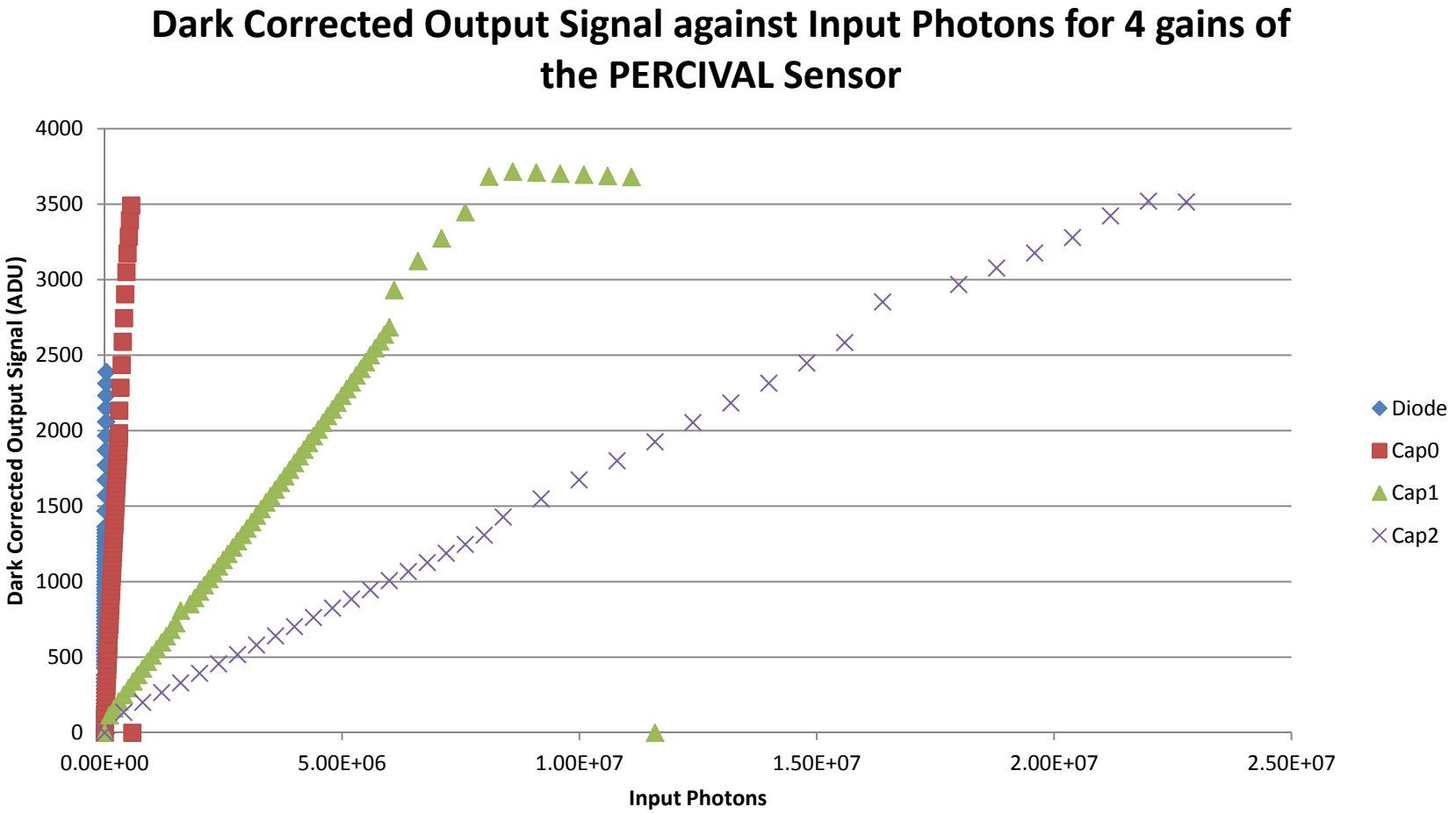
Dark Corrected Output Signal against Input Photons for 4 gains of the PERCIVAL Sensor
Dark Corrected Output Signal (ADU)
4000
3500
3000
2500
2000
1500
1000
500
0
0.00E+00
5.00E+06
1.00E+07
1.50E+07
2.00E+07
2.50E+07
Input Photons
Diode
Cap0
Cap1
Cap2

HDR PIXEL

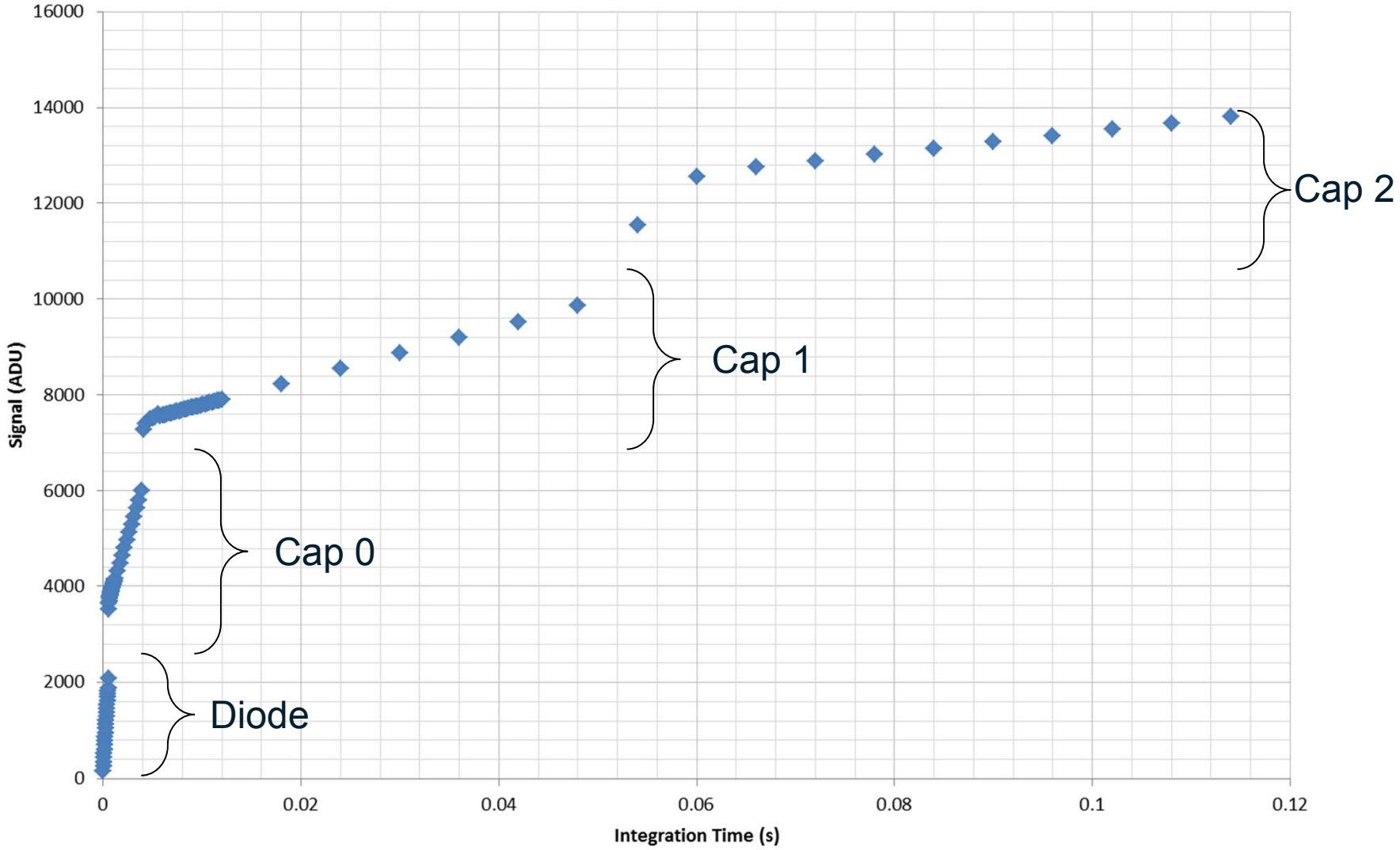
16000
14000
12000
10000
8000
6000
4000
2000
0
Signal (ADU)
0
0.02
0.04
0.06
0.08
0.1
0.12
Integration Time (s)
Cap 2
Cap 1
Cap 0
Diode

DATA STREAM

15 bits per pixel ⊗ 16 million pixels ⊗ 2 reads ⊗ 120 fps ⇒ 60 Gbit/sec

⇒ PLL ⊕ LVDS outputs: double data rate at 470 Mbits/sec

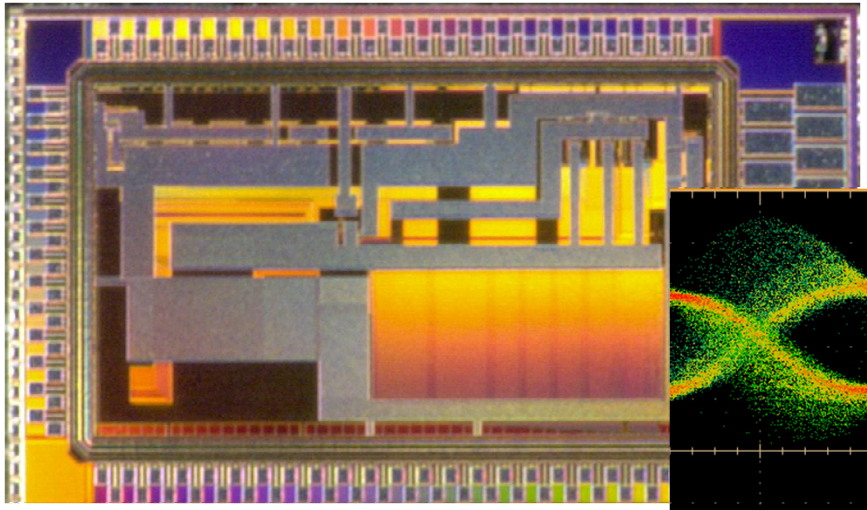

Test structure

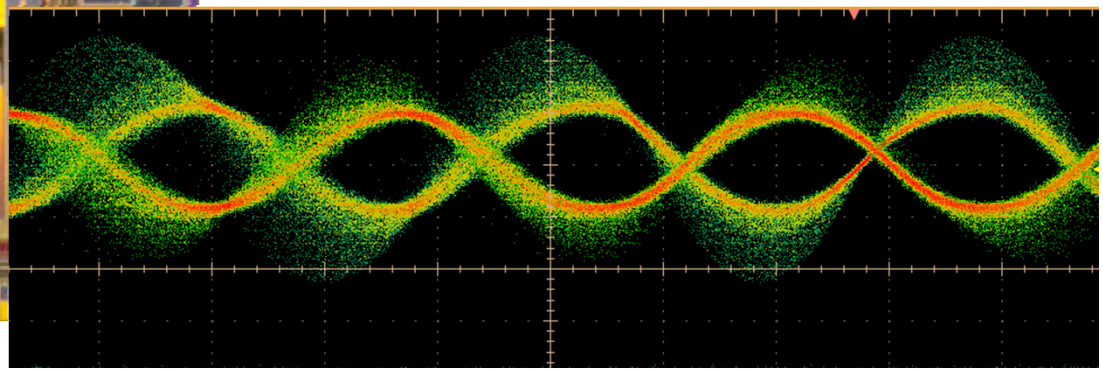

Eye diagram. Tested at 800Mbit/sec

Limited by DAQ.

SENSOR FLOORPLAN

7 row parallel read Signals operating in snapshot and rolling mode

Multiple Gain Handling

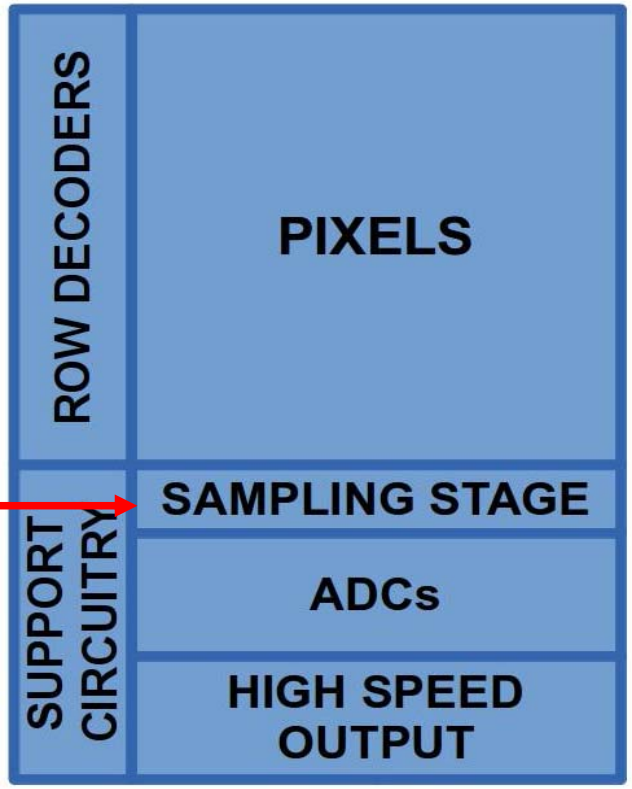

Designed in TowerJazz 180 nm CIS process

STITCHING

Large Sensor

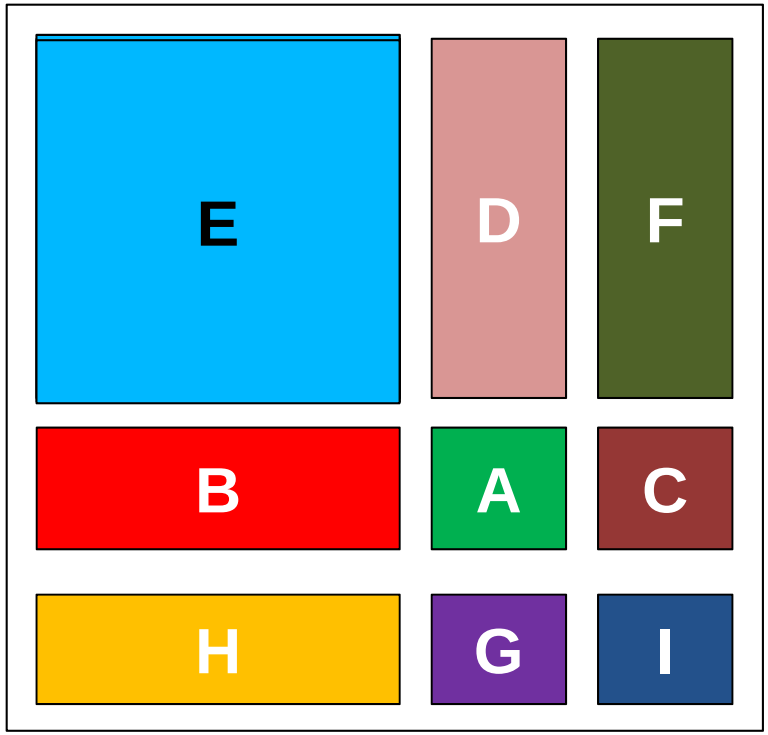

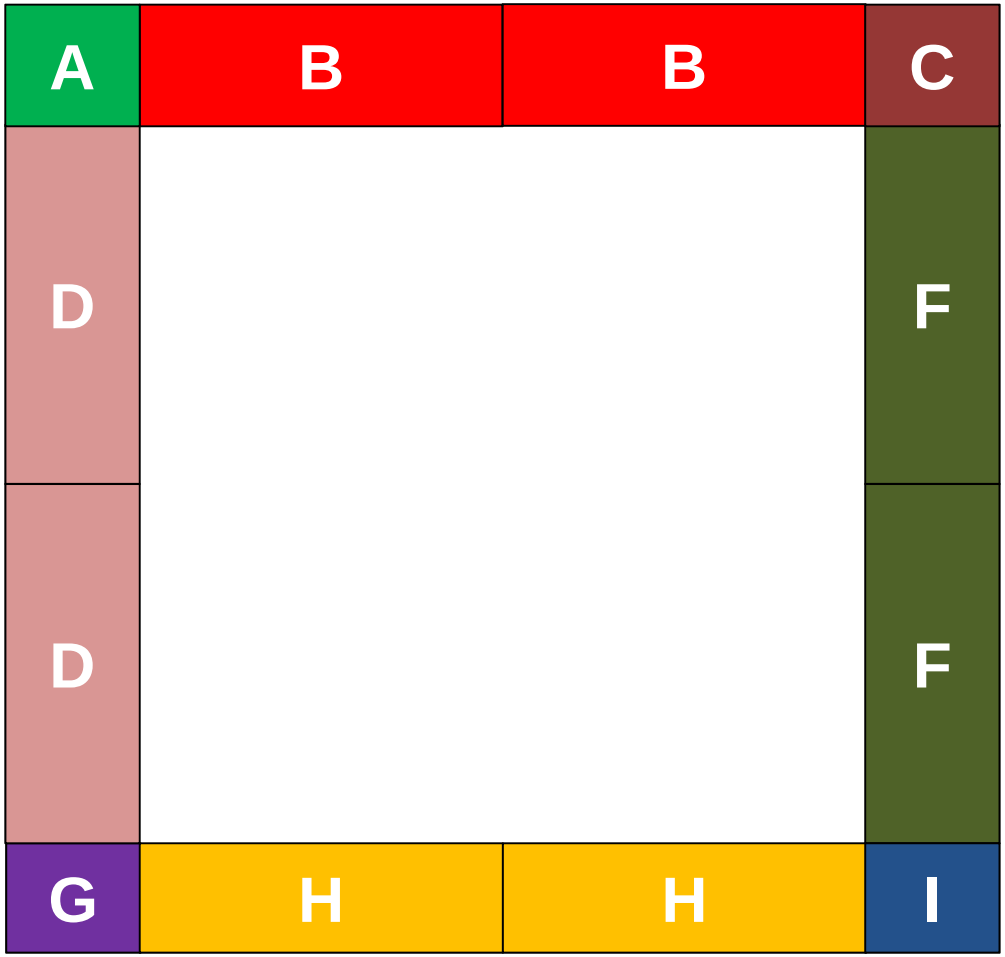

Science & Technology Facilities Council

WAFER-SCALE SENSOR AT STFC

Lassena:

6.7Mpixel

30 fps

2x2 and 4x4 binning

Region-of-interest readout

High Dynamic Range (HDR) mode

Partially Pinned PhotoDiode

TJ 180 CIS

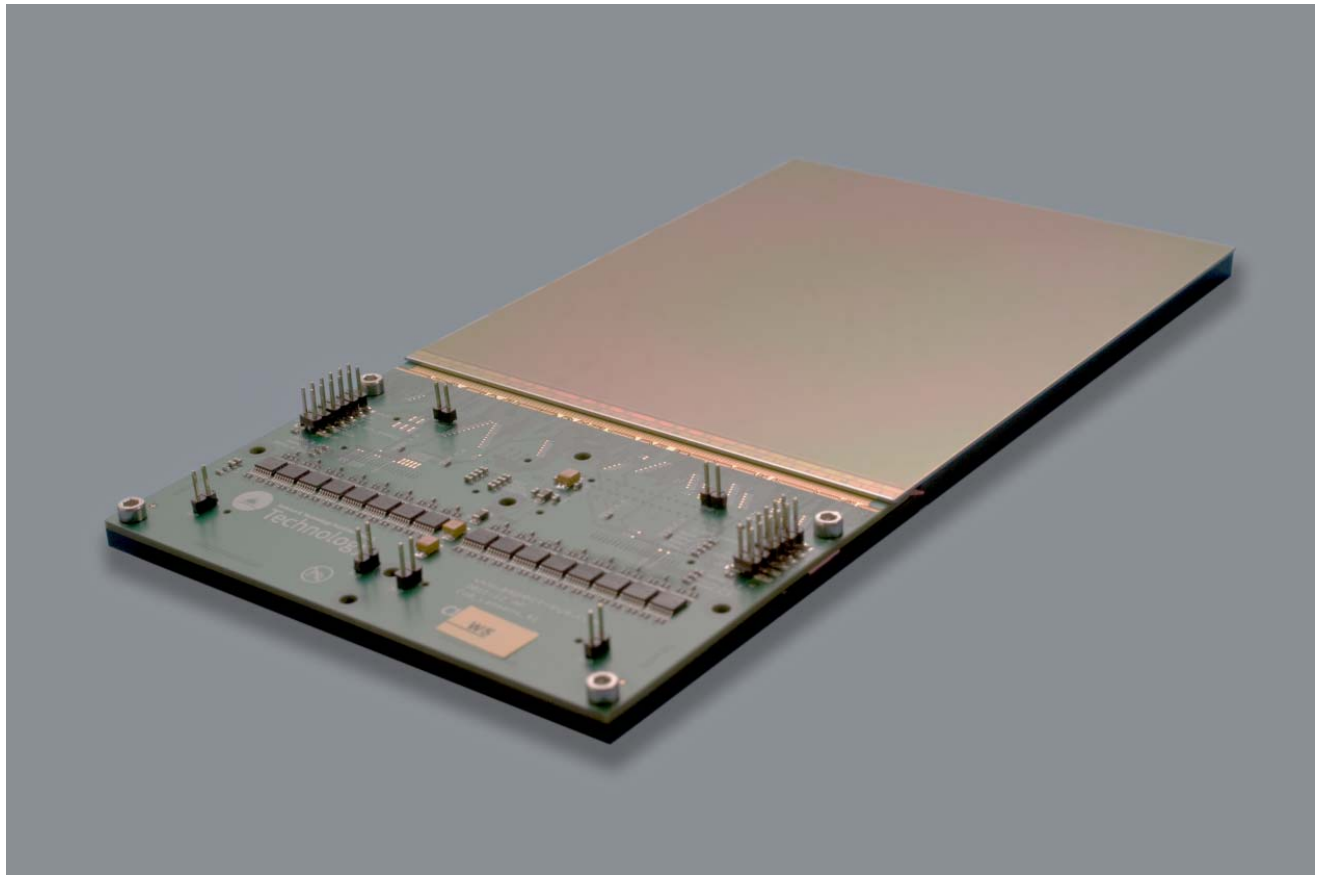

STITCHED, FULL SIZE SENSOR

FULL SIZE DEVICES

- Working on top-level stitching block containing:
  - 22 Serialisers and LVDS output stages (equivalent to 22 TS3s)
  - 704 columns, each with 8 readout stages (equivalent to 5 TS1s)
- Basic block will allow production of sensors in different sizes. Based on 27 μm pitch
  - P2M (1408 cols x 1484 rows, 2x2 stitching blocks) → Mid 2015
  - P13M (3528 cols x 3717 rows, 5x5 stitching blocks) → End 2015 – Beg 2016

P2M

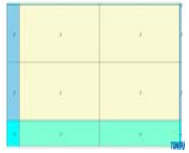

P13M

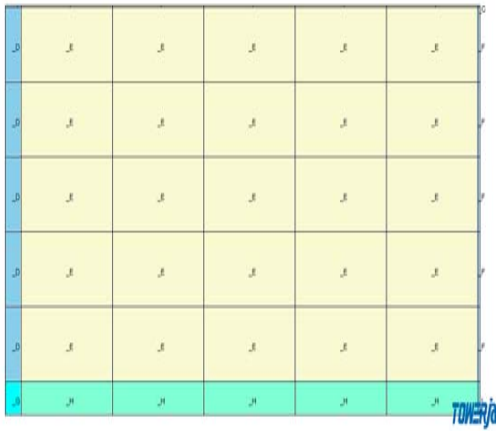

CONCLUSIONS

- Percival. A wafer-scale CMOS imager sensor for low-energy X-ray detection
  - ✓ Low noise (<15 e- rms), HDR (>10Me- full well), large pixel (≥ 25 μm)
  - ✓ Stitched, wafer-scale sensor
  - ✓ Multiple (7) ADCs per column
  - ✓ High-speed serialiser (≥ 500Mbit/sec)
- Prototypes characterised
- Taping out now prototype with improved noise performance
- BSI (delta-doped) part tested in beam test for low energy X-ray detection

- Stitched sensors
  - ✓ P2M = 2 Mega pixels, 4cmx4cm → Mid 2015
  - ✓ P13M = 13 Mega pixels, 10cmx10cm → End 2015 – Beg 2016

Science & Technology
Facilities Council

Questions?