G4-STORK: Stochastic Calculations of Reactor Kinetics

Geant4 neutron mini workshop

Adriaan Buijs

McMaster University

July 10, 2014

Staff

Adriaan Buijs:

- 1982-1986: Grad student PEP9/SLAC
- 1986-1994: Fellow/staff OPAL/CERN
- 1994-2001: Professor Utrecht Univ. L3/ALICE/LHC-B/
- 2002-2008: Reactor Physics Atomic Energy of Canada Limited
- 2009- Now: Professor Engineering Physics McMaster University

At McMaster:

- Liam Russell: Original code developer (now with AMEC NSS)
- Salma Mahzooni: ZED-2 Subcritical experiment
- Andrew Tan: SLOWPOKE rod-extraction transient
- Wesley Ford: Super-Critical Water Reactor design

Work supported by National Science and Engineering Research Council (NSERC)

Outline

- Background, why apply GEANT4 to nuclear reactors?
- Method, implemented in G4-STORK
  - Combing;
  - Criticality calculation;
  - Time evolution.
- Some examples, results
- Issues, future work
  - Nuclear data libraries;
  - (On the fly) Doppler broadening;
  - Delayed neutrons;
  - Feedback to geometry;
  - Adjoint flux.

Background

Nuclear reactors:

- Nuclear reactors are all about neutrons. And photons. And electrons. Not neutrinoes.
- In Canada, we have CANDU reactors.
- About as big as, say the OPAL experiment.
- Has many detectors, too: > 100.

Simulation of nuclear reactors:

- Traditionally, neutrons have been treated as a gas:
  - Neutrons move freely;
  - Don't interact;
- Balance between absorption of neutrons and creation of new neutrons in fission reactions: critical reactor

$$k_{\mathrm{eff}} = 1 \quad \text{or} \quad \rho = 1 - \frac{1}{k_{\mathrm{eff}}} = 0. \tag{1}$$

- Use diffusion equations to calculate neutron populations;

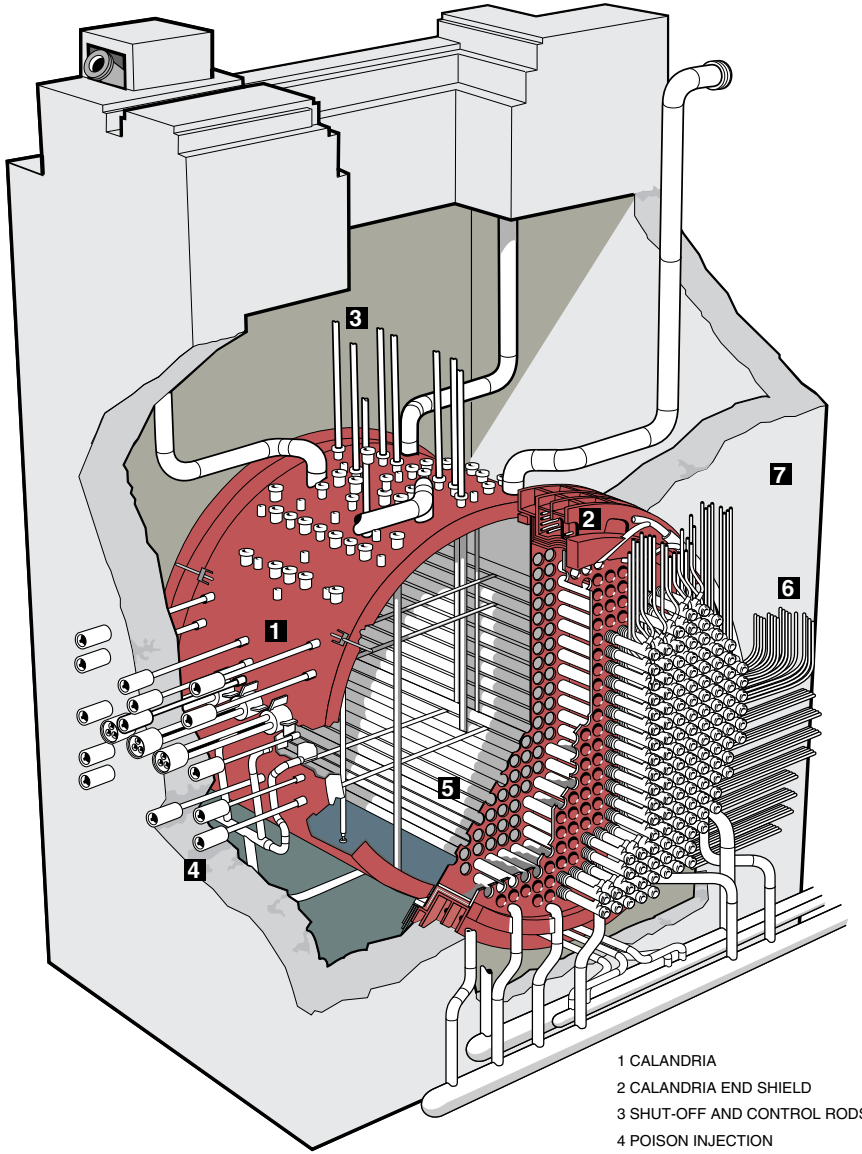

970667-2

1 CALANDRIA
2 CALANDRIA END SHIELD
3 SHUT-OFF AND CONTROL RODS
4 POISON INJECTION
5 FUEL CHANNEL ASSEMBLIES
6 FEEDER PIPES
7 VAULT

CANDU 6 Reactor Assembly

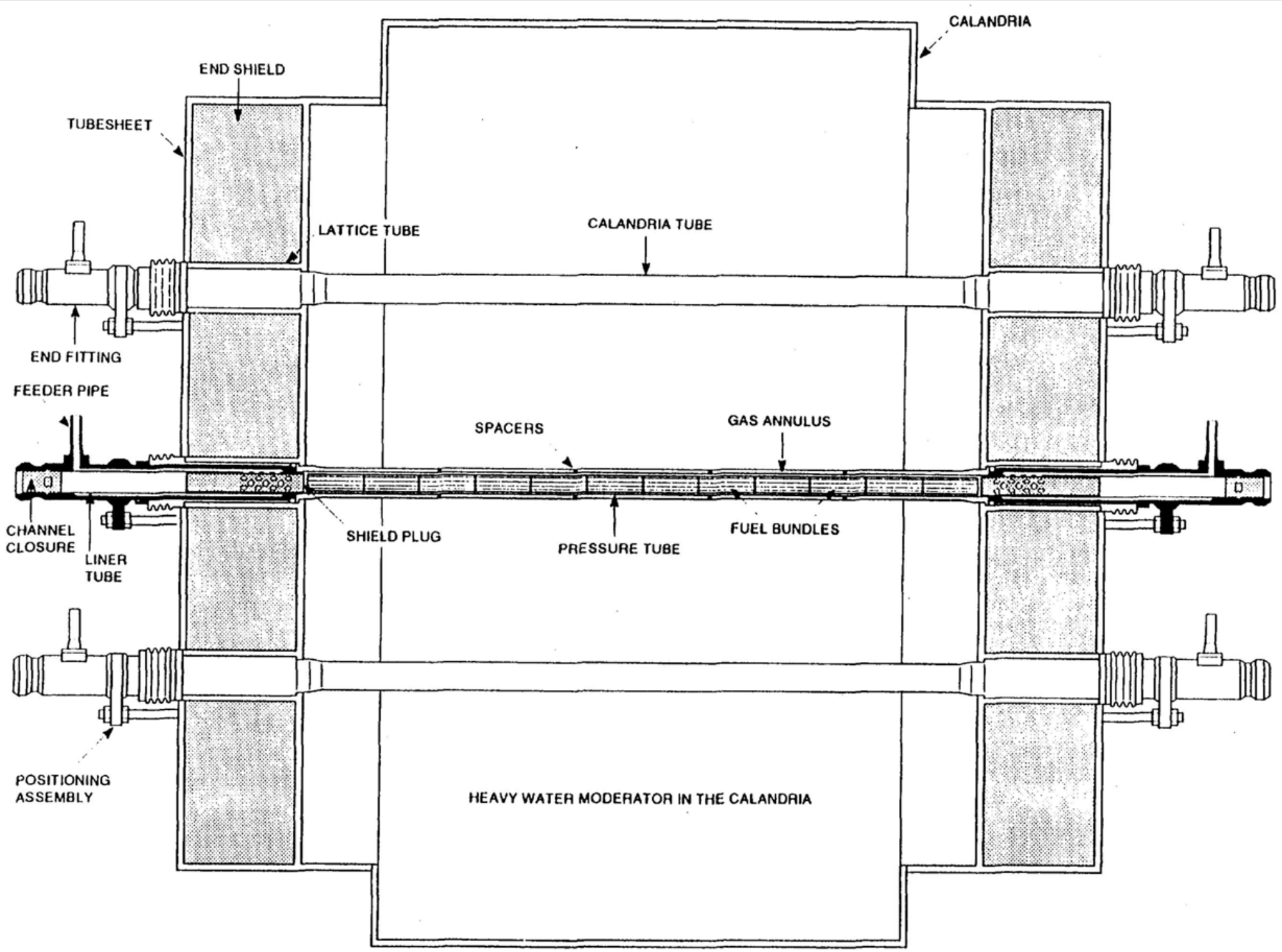
CALANDRIA
END SHIELD
TUBESHEET
LATTICE TUBE
CALANDRIA TUBE
END FITTING
FEEDER PIPE
SPACERS
GAS ANNULUS
CHANNEL CLOSURE
LINER TUBE
SHIELD PLUG
PRESSURE TUBE
FUEL BUNDLES
POSITIONING ASSEMBLY
HEAVY WATER MODERATOR IN THE CALANDRIA

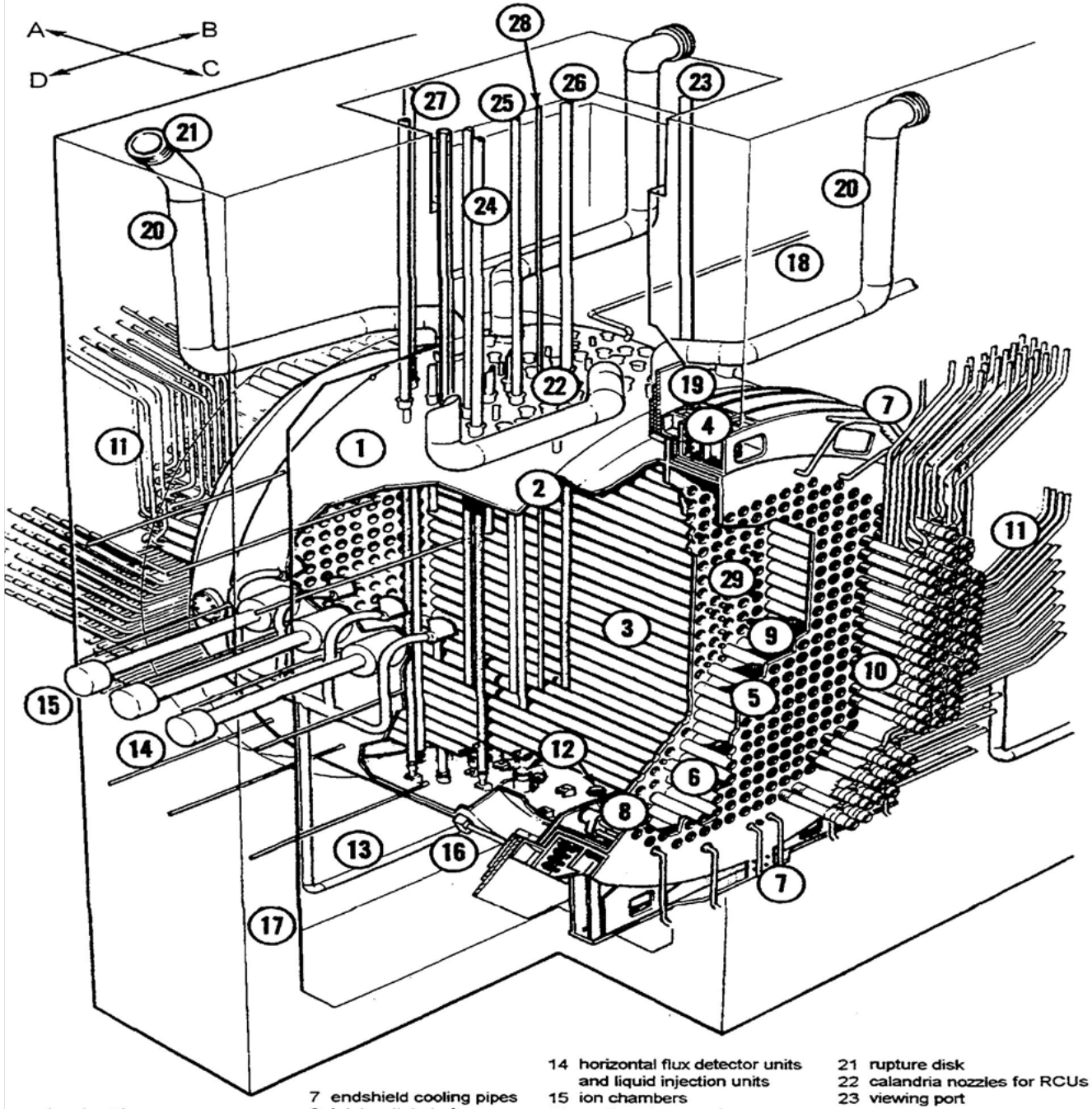

1 calandria
2 calandria shell
3 calandria tubes
4 endshield embedment ring
5 fuelling tubesheet
6 endshield lattice tube
7 endshield cooling pipes
8 inlet-outlet strainer
9 steel ball shielding
10 fuel channel end fittings
11 feeder pipes
12 moderator outlet
13 moderator inlet pipe
14 horizontal flux detector units and liquid injection units
15 ion chambers
16 earthquake restraints
17 reactor vault wall
18 pipe to moderator expansion head tank
19 curtain shielding slabs
20 moderator discharge pipes
21 rupture disk
22 calandria nozzles for RCUs
23 viewing port
24 shutoff unit
25 adjustor unit
26 control absorber unit
27 liquid zone control unit
28 vertical flux detector unit
29 calandria tubesheet


CNI-23
中核23公司
中远集团

CANDU 6 Fuel Channel

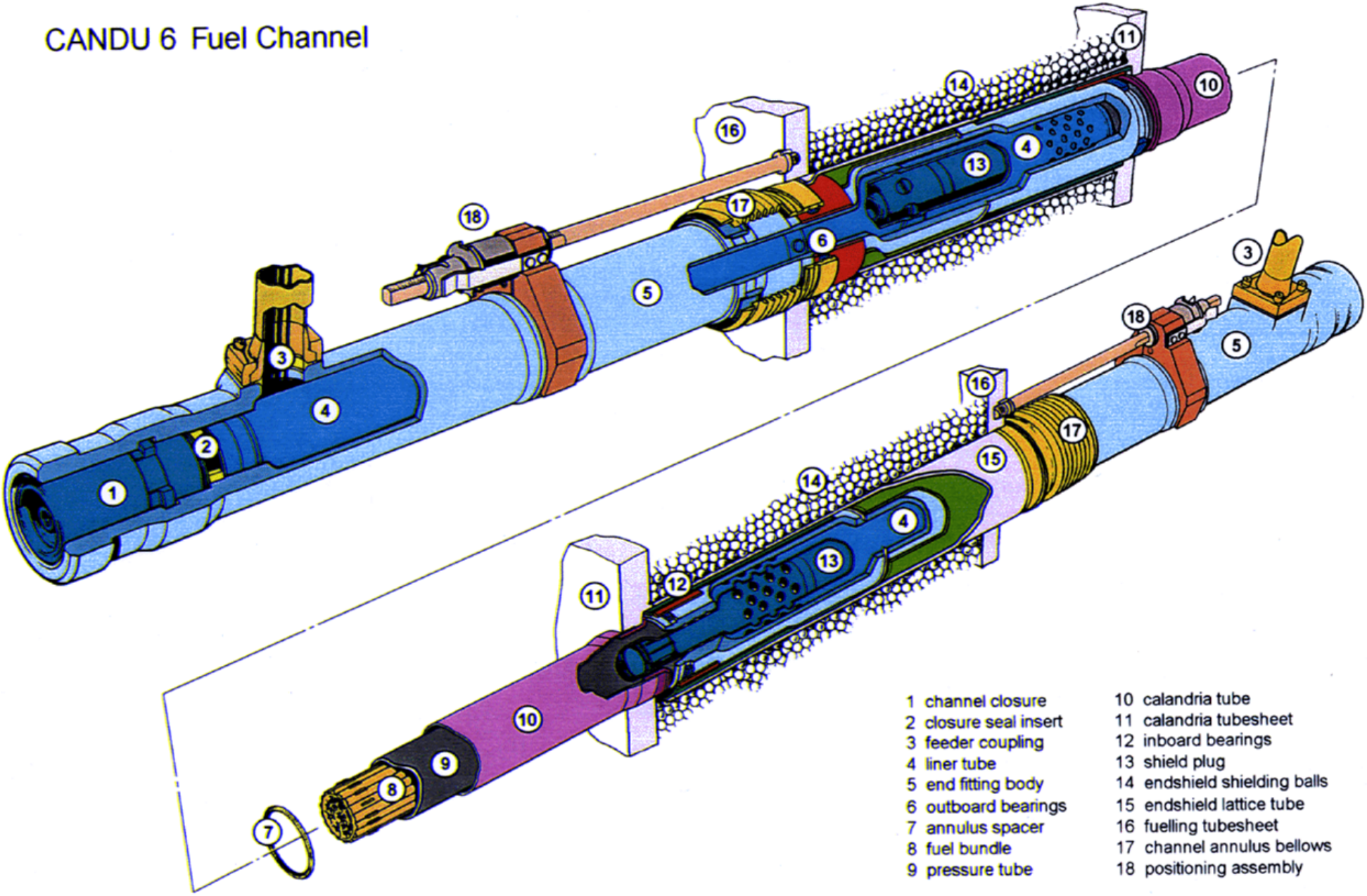

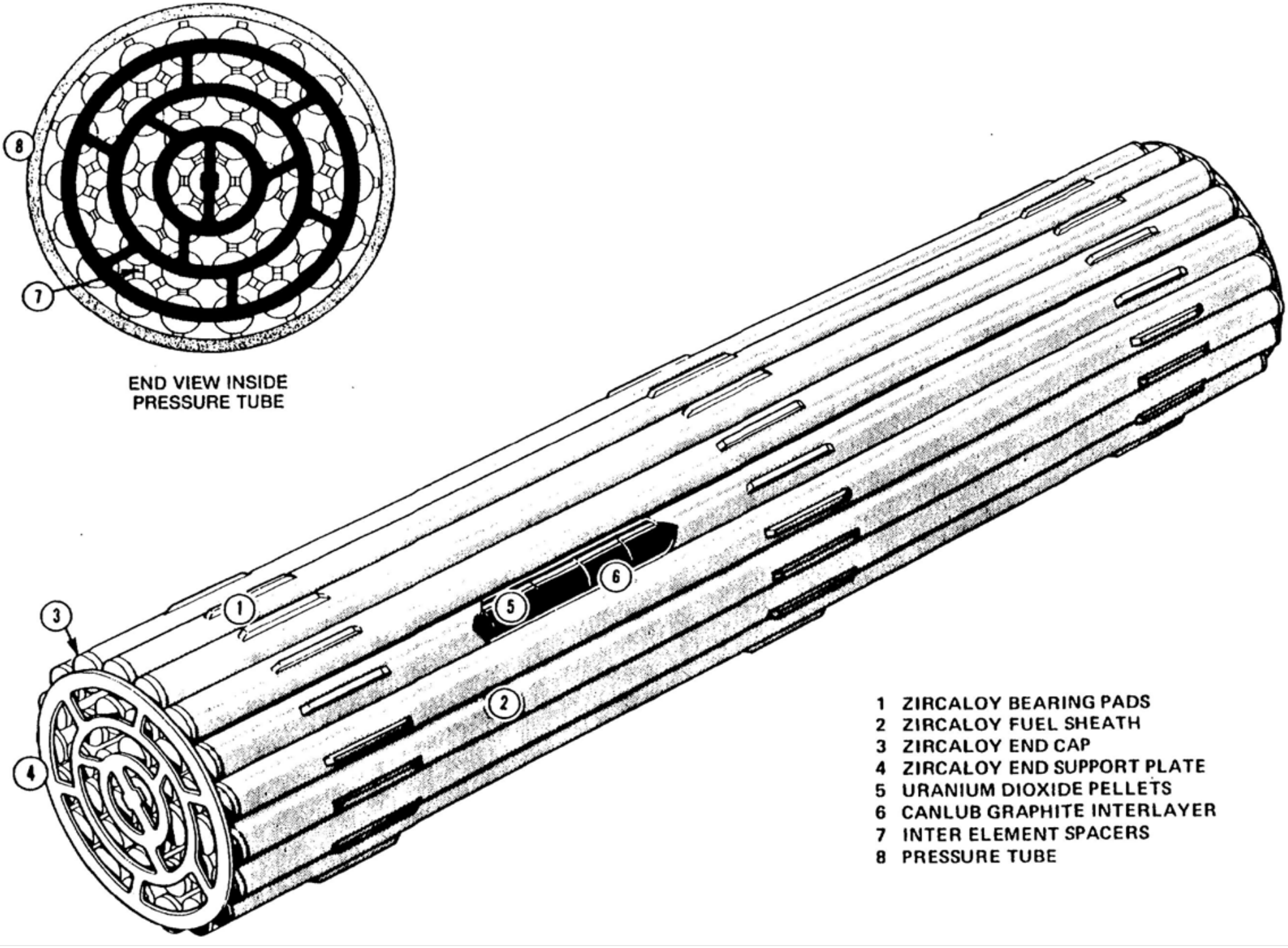
END VIEW INSIDE
PRESSURE TUBE
1 ZIRCALOY BEARING PADS
2 ZIRCALOY FUEL SHEATH
3 ZIRCALOY END CAP
4 ZIRCALOY END SUPPORT PLATE
5 URANIUM DIOXIDE PELLETS
6 CANLUB GRAPHITE INTERLAYER
7 INTER ELEMENT SPACERS
8 PRESSURE TUBE

Use of Monte Carlo in Reactor Physics

- Obviously, Monte Carlo is the most precise method to simulate a reactor.
- Obviously, computing power is limiting the usefulness of Monte Carlo.
- Has been used for small assemblies, of the exploding kind.
- For example, MCNP. Also used for dose calculations in LHC.
- Recently, also used for static full-core calculations.

Monte Carlo Procedure for Static Calculations

- Define geometry
- Generate, say, 1,000,000 neutrons;
- Follow them until they die.
- Say 41% of them cause a fission reaction in, say, U-235.
- Then the $k_{\mathrm{eff}} = 0.996$ for this cycle; it is subcritical.[1]
- The distribution of fission sites is now the **source** of neutrons for the next cycle.
- In the next cycle, 40% cause a fission reaction, $k_{\mathrm{eff}} = 0.972$, and so on.
- You need many cycles, to achieve convergence on:
  - Source distribution: where is the power in the reactor produced?
  - k_{eff}: is the reactor critical?

[1] each fission produces 2.43 new neutrons...

Combing

If multiplication constant not unity ($k_{\mathrm{eff}} \neq 1$), then

- If $k_{\mathrm{eff}} > 1$: exponential growth from cycle to cycle; run out of computer memory soon;
- If $k_{\mathrm{eff}} < 1$: exponential decline from cycle to cycle; run out of statistics;

Remedy by combing:

- If $k_{\mathrm{eff}} > 1$: randomly remove fission sites;
- If $k_{\mathrm{eff}} < 1$: randomly add fission sites;

In both cases, preserve the fission source distribution.
Can be tricky, needs to be done efficiently.
Sidenote: when parallellizing, neutrons are independent, but each cycle constitutes a barrier.

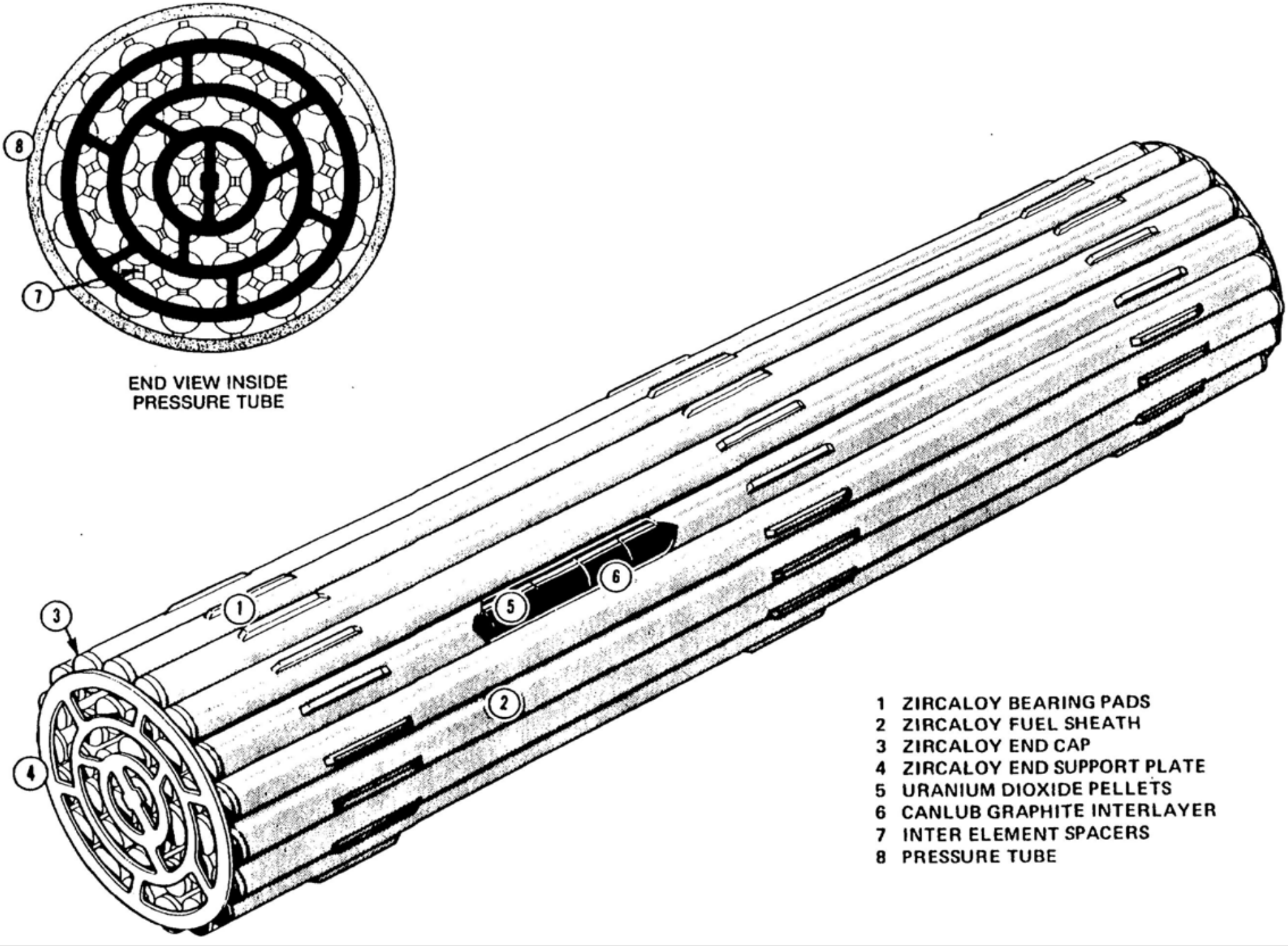
END VIEW INSIDE
PRESSURE TUBE
1 ZIRCALOY BEARING PADS
2 ZIRCALOY FUEL SHEATH
3 ZIRCALOY END CAP
4 ZIRCALOY END SUPPORT PLATE
5 URANIUM DIOXIDE PELLETS
6 CANLUB GRAPHITE INTERLAYER
7 INTER ELEMENT SPACERS
8 PRESSURE TUBE

Fule Bundle Model in Geant-4

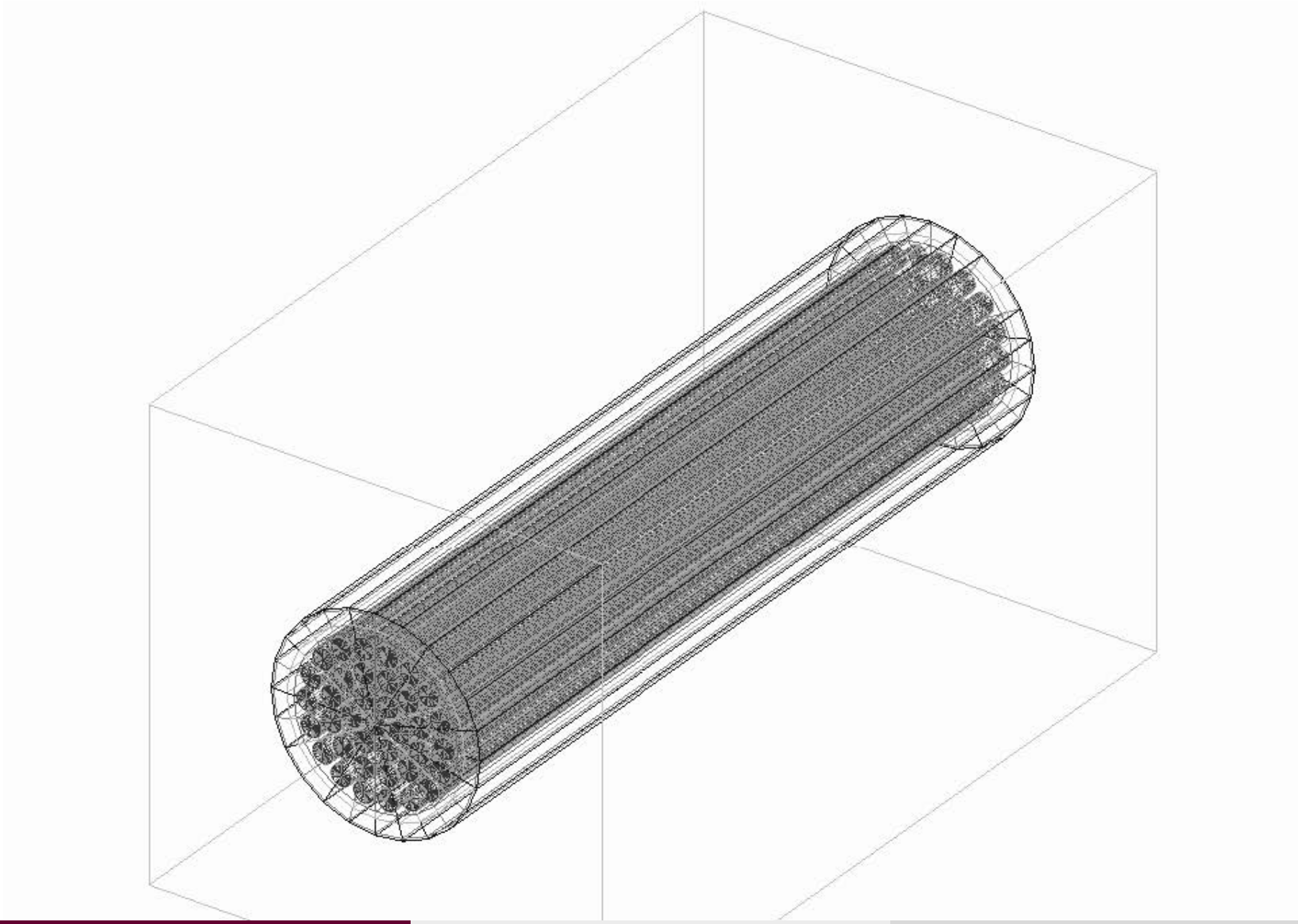

Results for CANDU Fuel Bundle

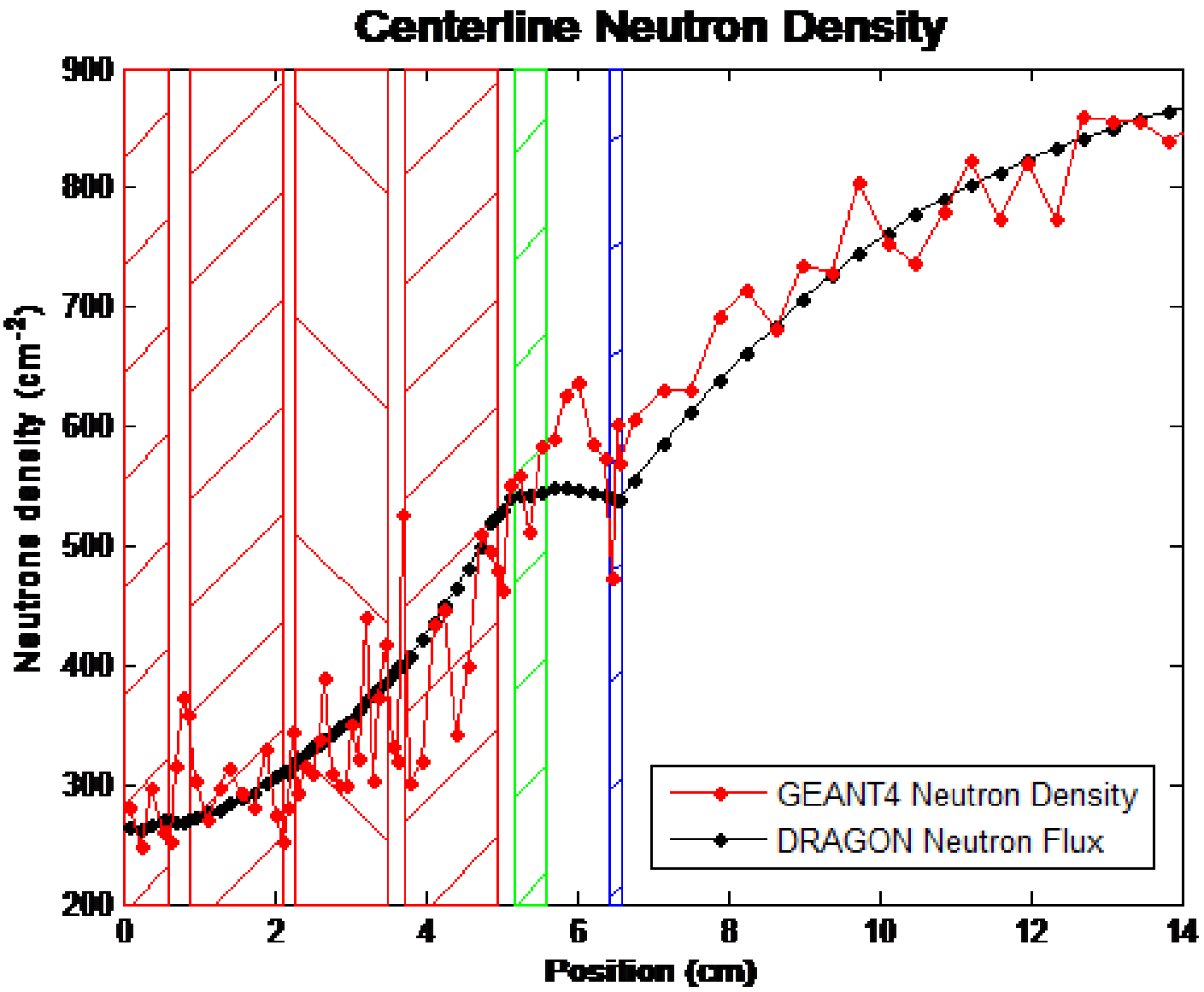

Why GEANT-4?

Why GEANT-4? Because:

- It's there.
- Traditional MC's work with cycles and generations. The concept of time is lost because some neutrons live longer than others;
- Geant-4 tracks particles in "real" time.

.

Time Evolution of Neutron Population

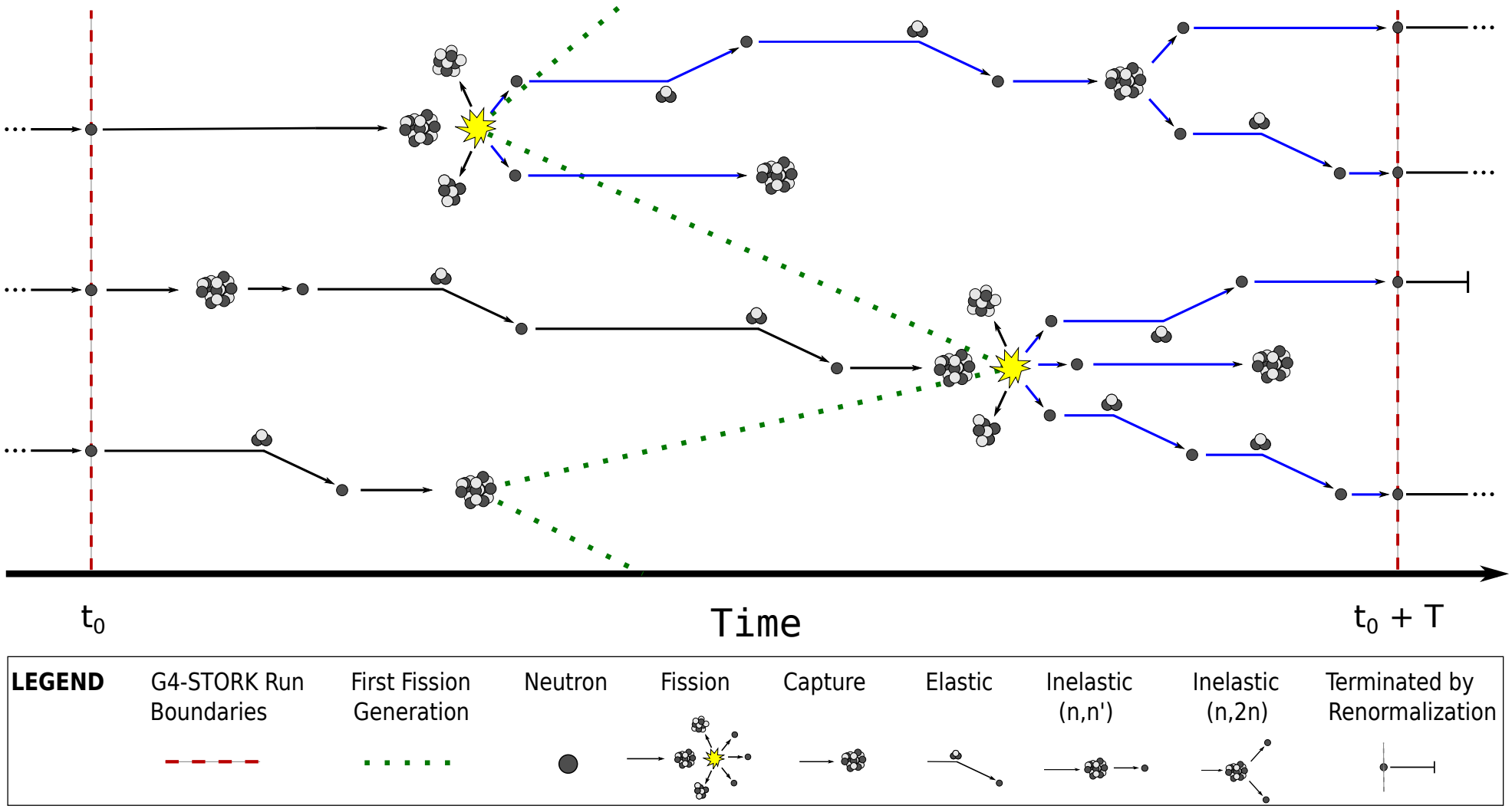

Reactivity Calculations with GEANT-4

- Neutrons are now followed in "runs" rather than "cycles";
- One run is typically a few ms.
- For parallellisation, fixed point in time is now the barrier.
- Since neutrons are now followed in time, the geometrical properties may be changed in time as well: feedback between number of fissions (power), causing fuel to heat up, causing absorption to increase, causing the number of fissions to decrease, etc. (self-terminating power excursion).
- Essential ingredient: On the fly Doppler broadening.

Simple Temperature Change U-235 Sphere

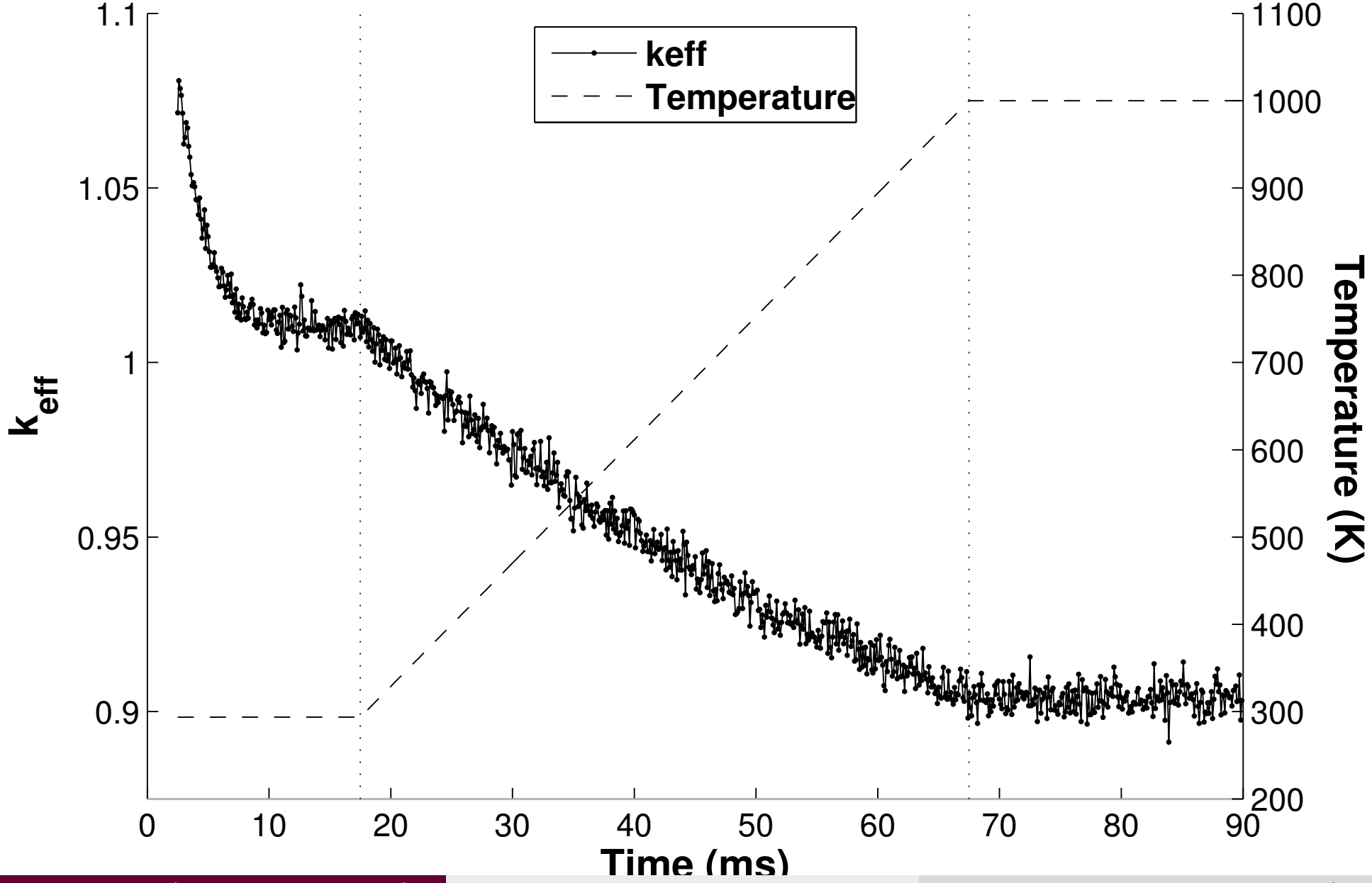

Application: SLOWPOKE Rod Extraction

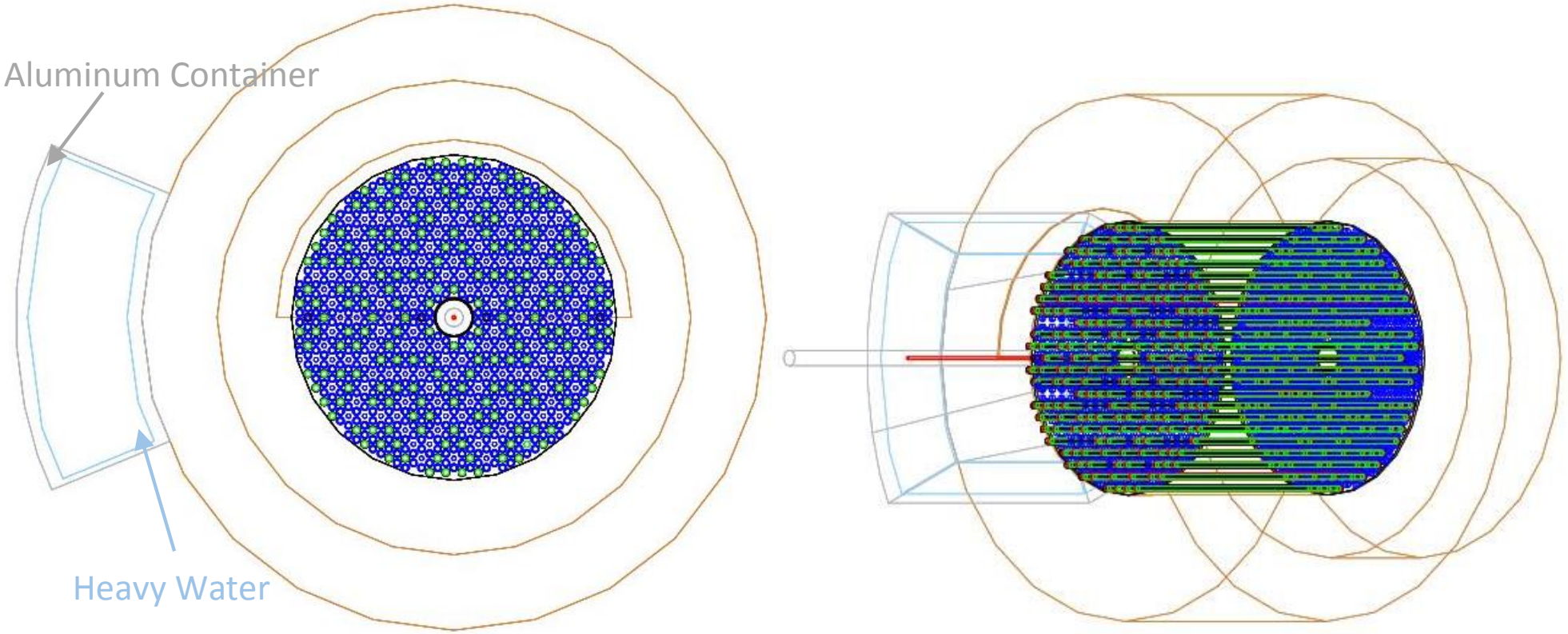

Figure 10 Reactor with added D_2O thermal column (On the left is a top view and on the right is a 45 degree view)

Application: SLOWPOKE Power Transient

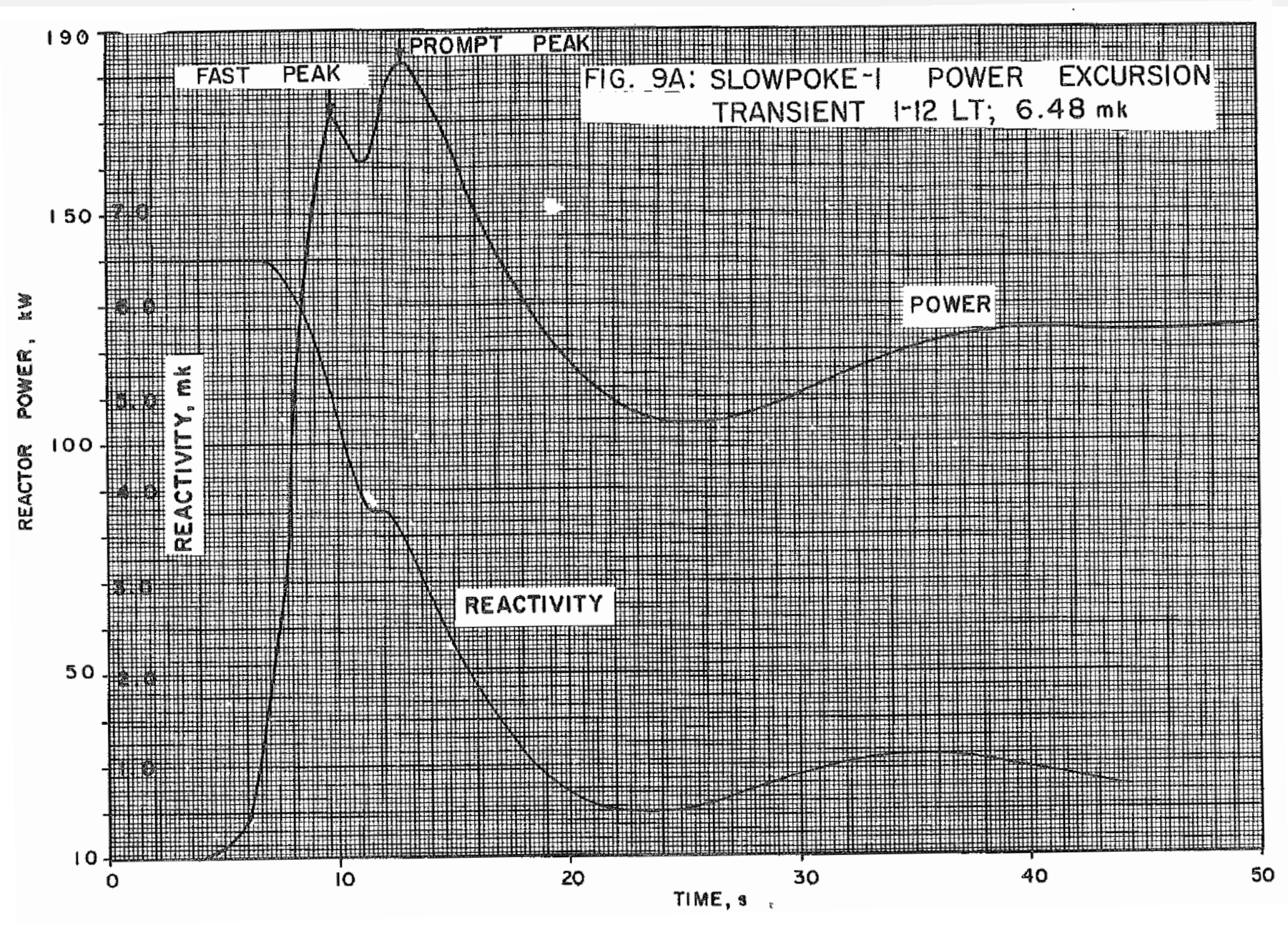

Purpose of the Application

- Validation of fuel temperature coefficient (Doppler broadening); important for reactor licencing.
- Crucial ingredient: delayed neutrons. Fission products emit additional neutrons after a certain time. These neutrons affect the reactivity of the core as a function of time.
- Delayed neutrons must be combed, too.

Sub/super-Critical Systems

- MCNP inherently unsuited for calculation of deep sub-critical and super-critical systems.
- Comparison of MCNP and G4-STORK for U-235 sphere of different sizes:

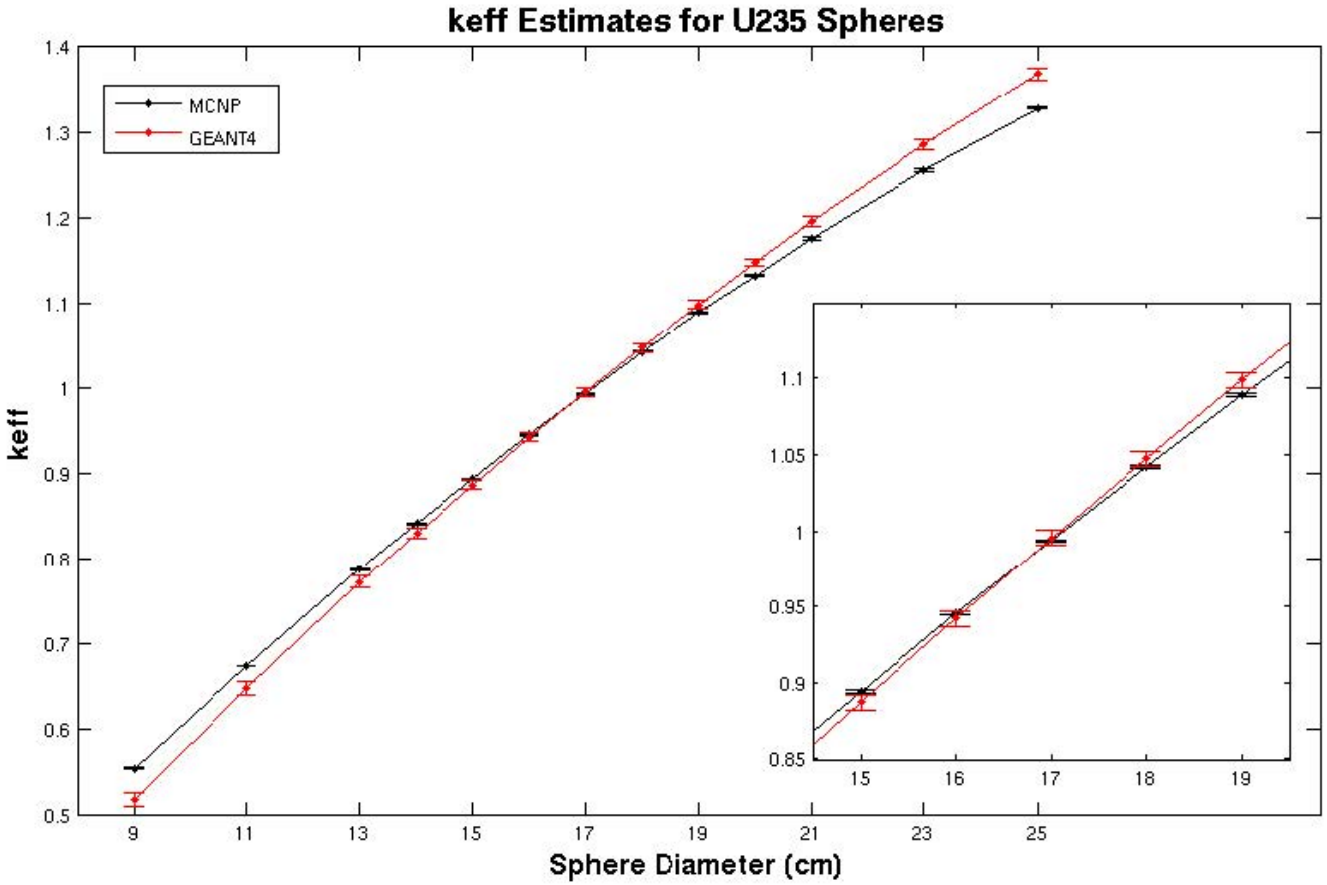

Other Applications: ZED-2 Subcritical Experiment

ZED-2 (Zero Energy Deuterium) Reactor in Chalk River, Canada:

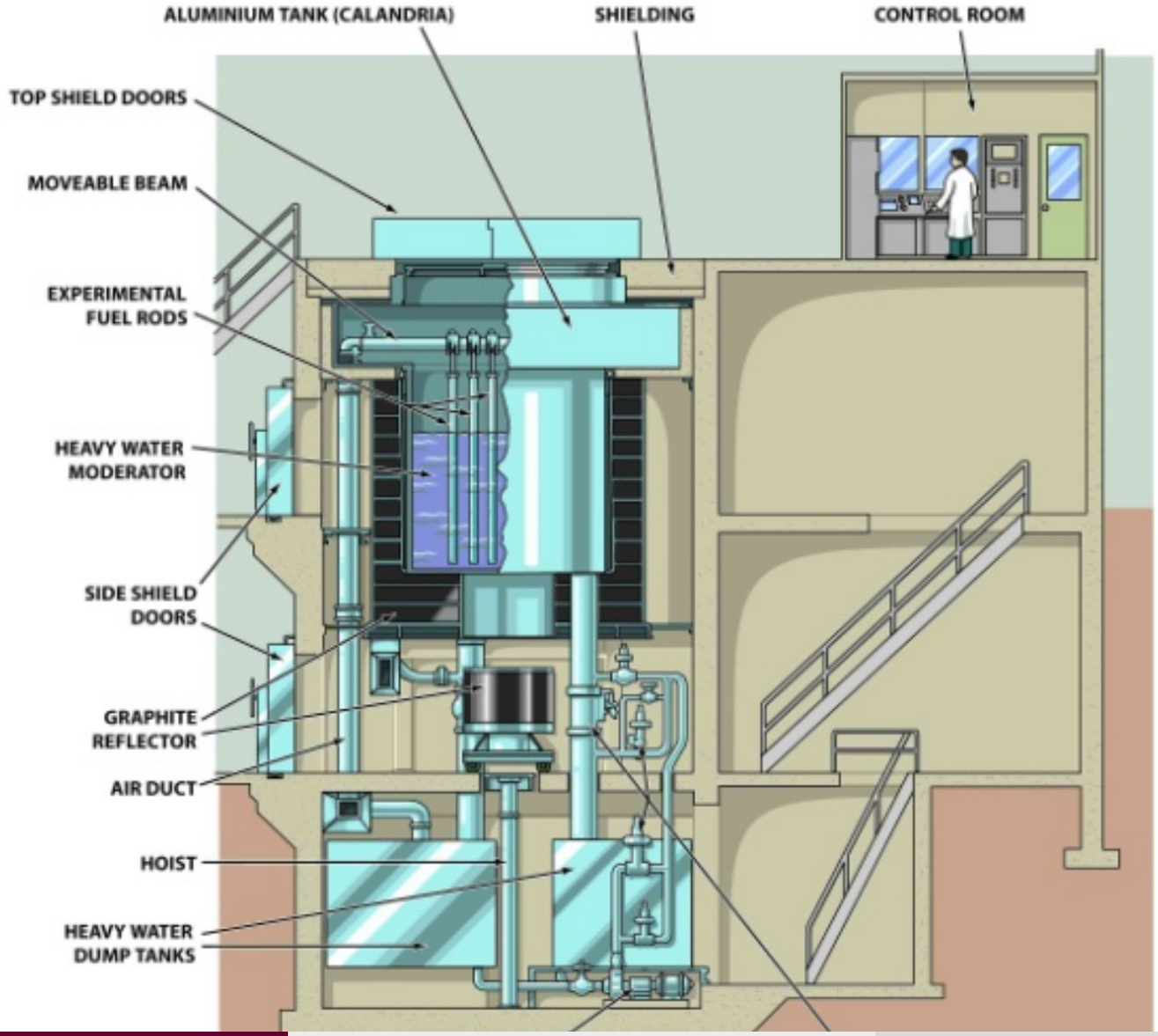

ZED-2 Subcritical Experiment

Moderator drain experiment. Measurement of sub criticality.

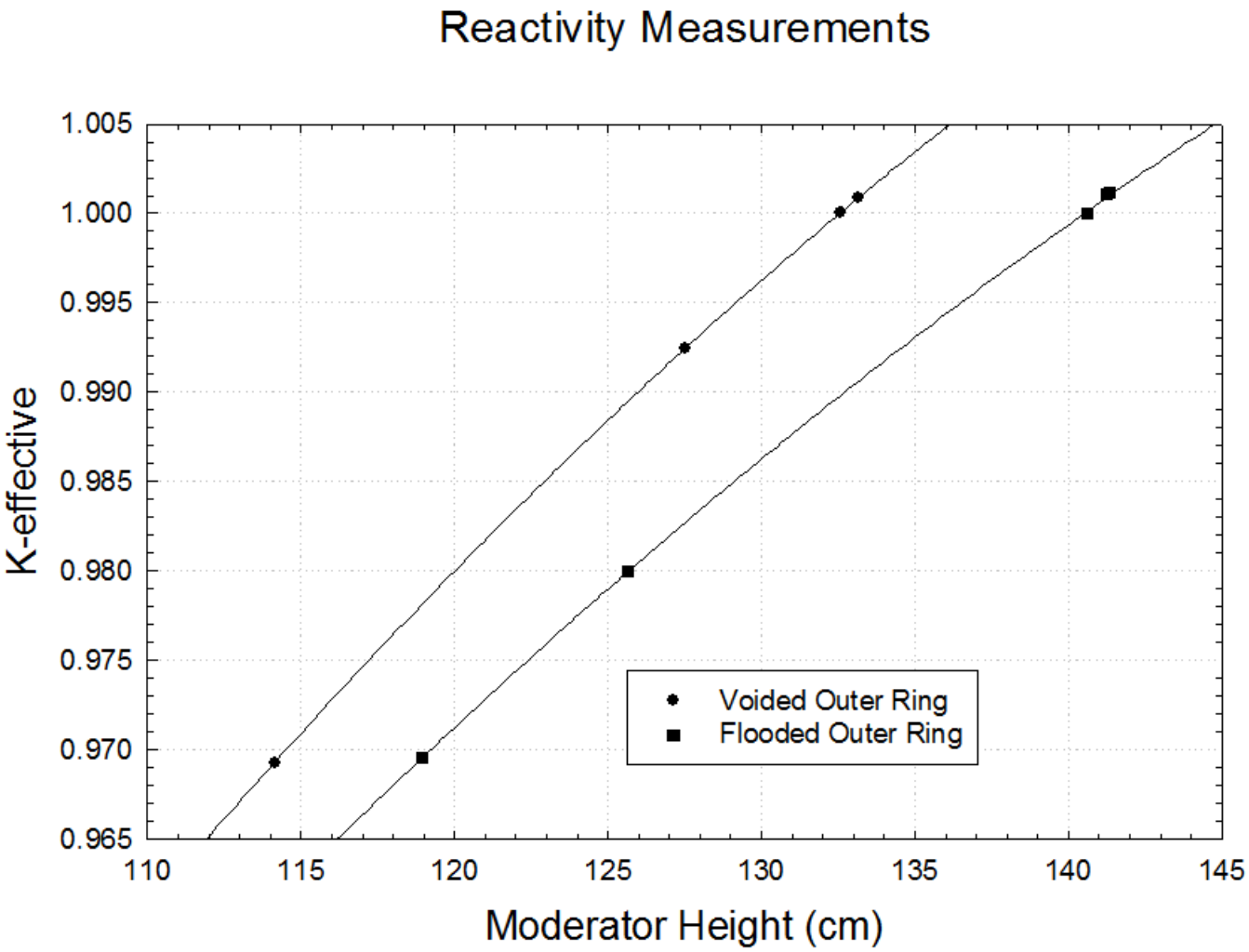

Summary and Conclusions

- We have produced a user code for GEANT4 (G4-STORK), which:
  - Follows neutron population in fissioning materials;
  - Maintains population size through a combing algorithm;
  - Includes delayed neutrons;
  - Calculates converged fission source distribution and k_{eff};
  - Allows for feedback between neutronics and material properties;
- Issues and challenges:
  - Nuclear data format. Reverse engineered the format to be able to generate files from MCNP data;
  - On-the-fly Doppler broadening. Essential part of the code, but rather slow up to now.
  - Proper treatment of delayed neutrons;
  - Increase time span of the calculation;
  - Adjoint flux calculation.