CERN

Power Converters design optimization: need for an integrated approach with the magnet design

Davide Aguglia

CERN, Technology Department, Electrical Power Converter Group, CH-1211 Geneva 23, davide.aguglia@cern.ch

November 26th 2014

Outline

- Power converters introduction
- Conversion chains & sources of losses
- Illustrative example - need of an integrated design approach
- Conclusion

Power converters introduction

- DC/DC power converter – old school

Transistor (T) operated in its active region

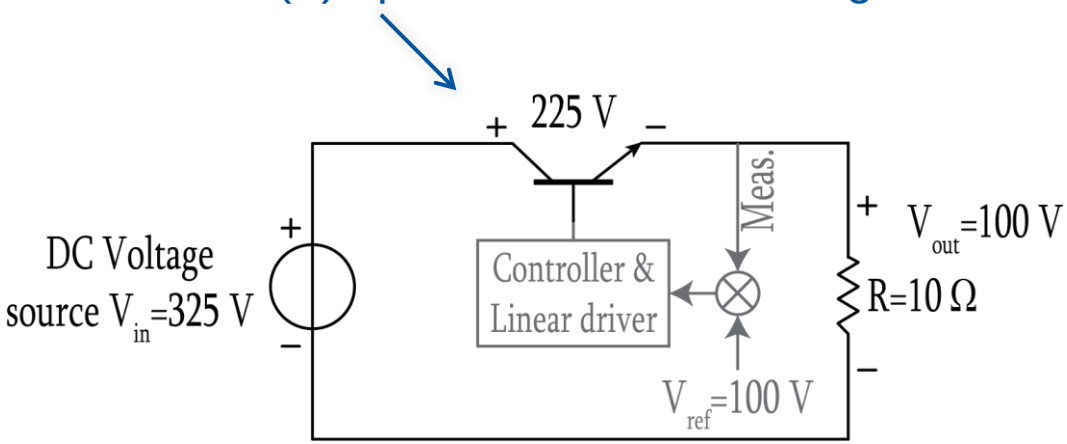

- Analysis:

P_{in}=325 V x 10 A=3.25kW

P_{out}=100Vx10A=1kW

P_T=P_{in}-P_{out}=225Vx10A=2.25kW

Efficiency:

$$\eta = \frac{P_{out}}{P_{in}} = \frac{1}{3.25} = 0.3 \longrightarrow \mathbf{30\%}!$$

- Used until 1960s (still used in special applications: audio, high precision, HF, …)
- Drawbacks: low efficiency – high volume

Power converters introduction

- Pulsed power converter – old school
  - Simple capacitor discharge converter

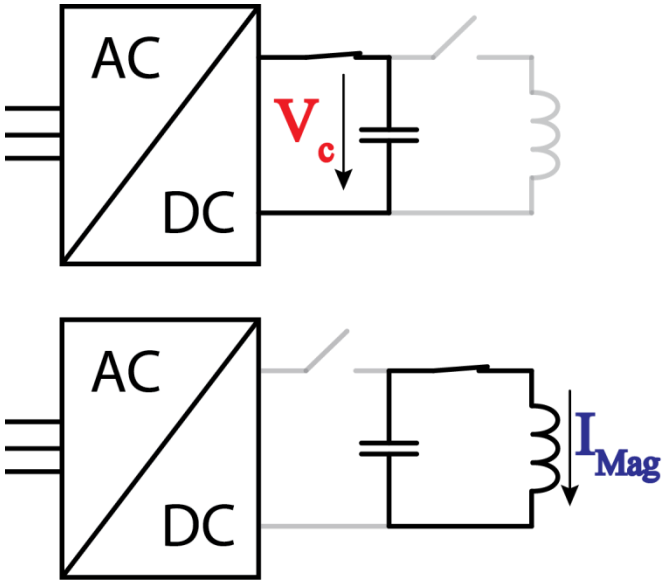

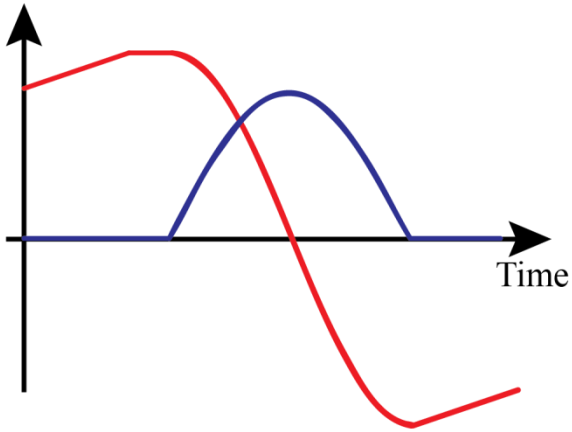

- Very low losses (ON & OFF switch states only)
- Reliable (few components)
- No control during pulse (pulse to pulse control possible)
- Not many choices in current shapes (sinusoids or sum of a few sinusoids…)

Power converters introduction

- Switching power converter – new style

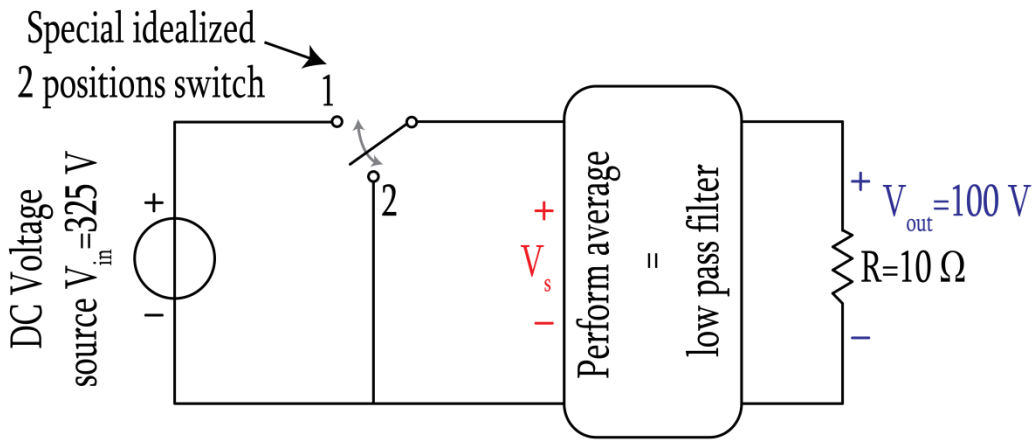

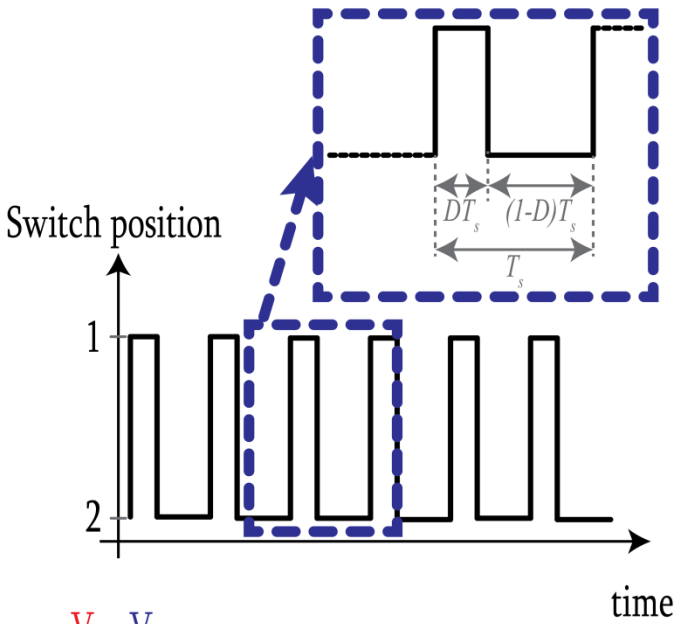

T_s: switching period
D: duty cycle

$$V_{out} = \frac{1}{T_s}\int_0^{T_s} V_{in}(t)dt = DV_{in}$$

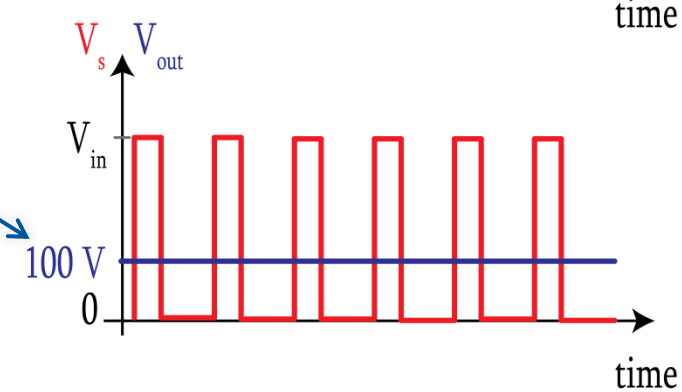

- Controllable
- Efficient >90%
- Within limits follows any kind of current reference!

Power converters introduction

- The corresponding real circuit is:

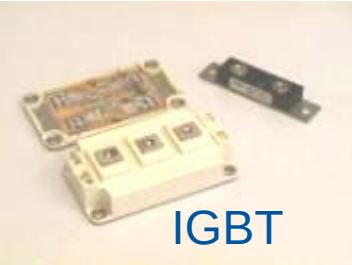

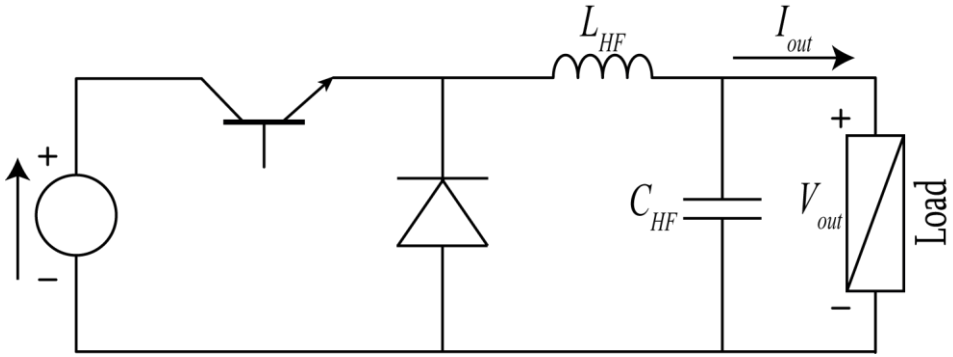

Drawback for magnet:
- Current ripple (switching harmonics)
- Additional losses in winding and core
- Possible ripple on magnetic field

- Switches technology – e.g. IGBT
  - IGBT voltage ratings examples: 600V, 1.2kV, 1.7kV, 3.3kV, 6kV, and a bit higher
  - Higher than 1.7kV, switching frequency goes down, used in high power application only
  - In classical topologies converter output voltage = 0.5 IGBT voltage rating, e.g. with 1.7kV, converter's maximum output voltage 800V

Conversion chains & losses sources

- Direct (often old) AC/DC conversion

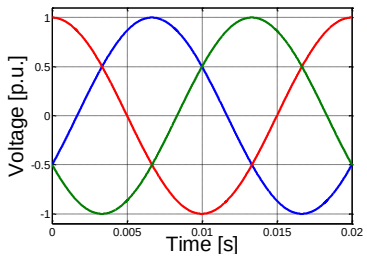

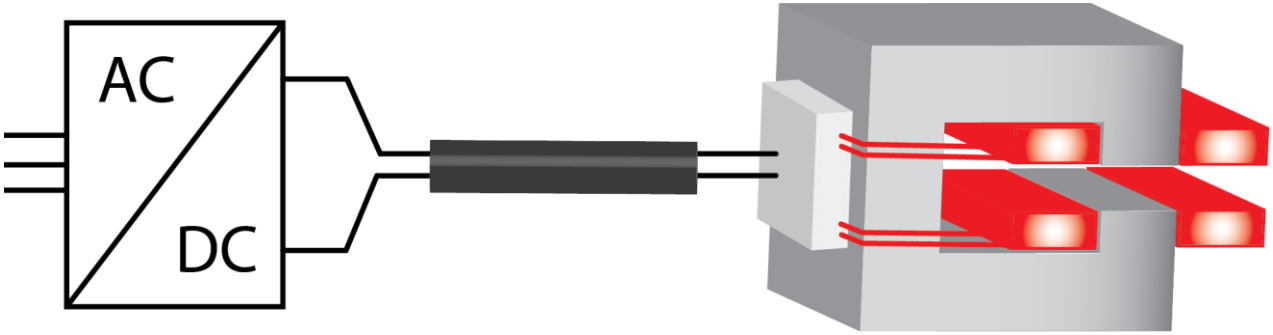

- OK for DC supply or slow ramps - cycling
- Cycling or pulsed operation ≡ power fluctuation into the utility grid ≡ grid components over-dimensioning
- Used in high power applications with thyristors or new IGBT generation
- High efficiency
- Losses in AC/DC conversion, cables and magnet

Conversion chains & losses sources

- Indirect AC/DC conversion – relatively new!

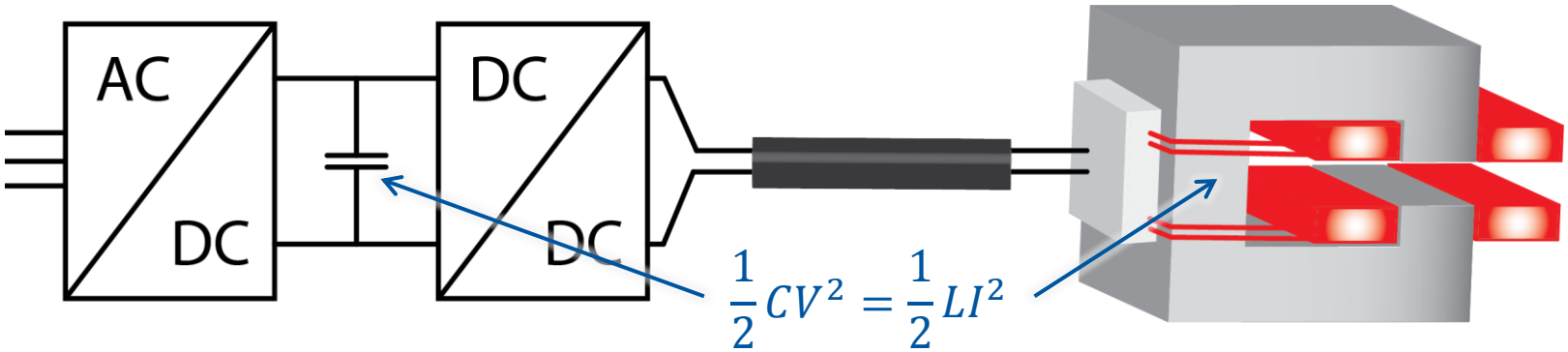

- Ok for DC, cycling or pulsed operation
- No power fluctuation on the utility grid
- Energy exchange/recovery between magnet and capacitor bank
- Used from low to high power applications
- Can have very good dynamics (current or voltage changes)
- Additional losses in DC/DC conversion stage

Conversion chains & losses sources

- Indirect AC/DC conversion + pulse transformer

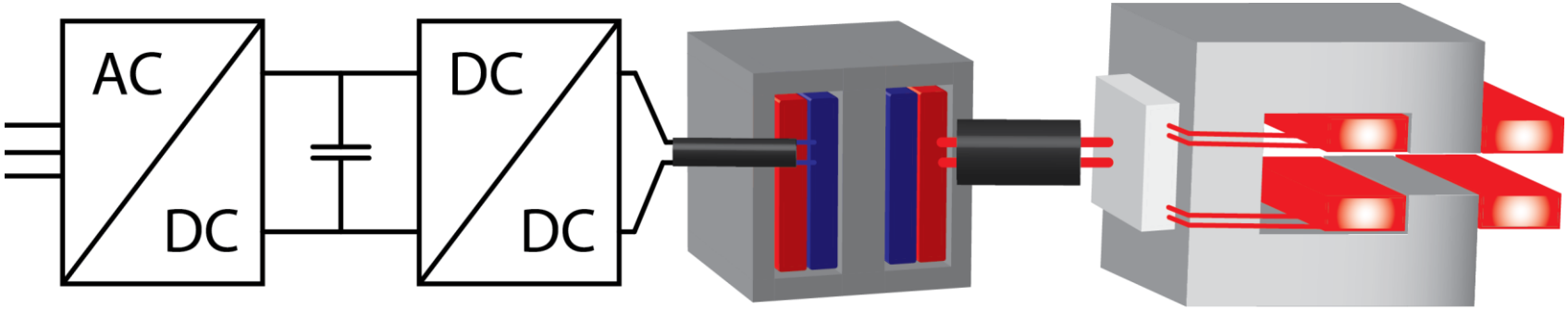

- Only for pulsed operation (fast)
- DC/DC converter to magnet current and voltage adaptation (remember switch technology – Slide 7)
- Pulse transformer size depends on magnet RMS current, current ramp-up and ramp-down times (or fundamental harmonic content if different than ramps), and max voltage
- Additional losses in pulse transformer

Conversion chains & losses sources

- Losses in the power converter
  - Switching & conduction losses
  - Inductors core & copper losses
- Cables losses – clear…
- Pulse transformers Losses
  - Core losses
  - Copper losses

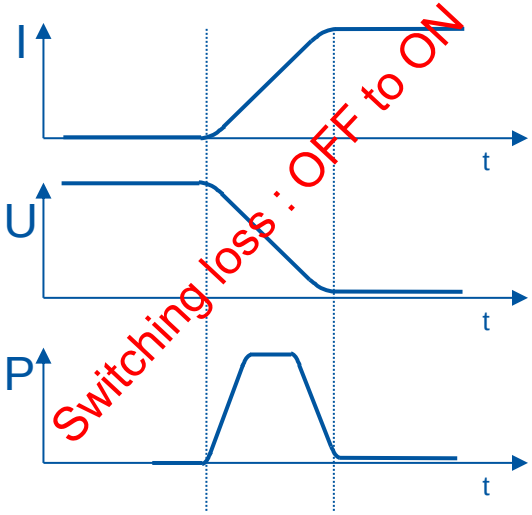

System losses primarily depends on magnet current!

Illustrative example - design sensitivity

- Assuming an arbitrary magnet which number of turns can be modified

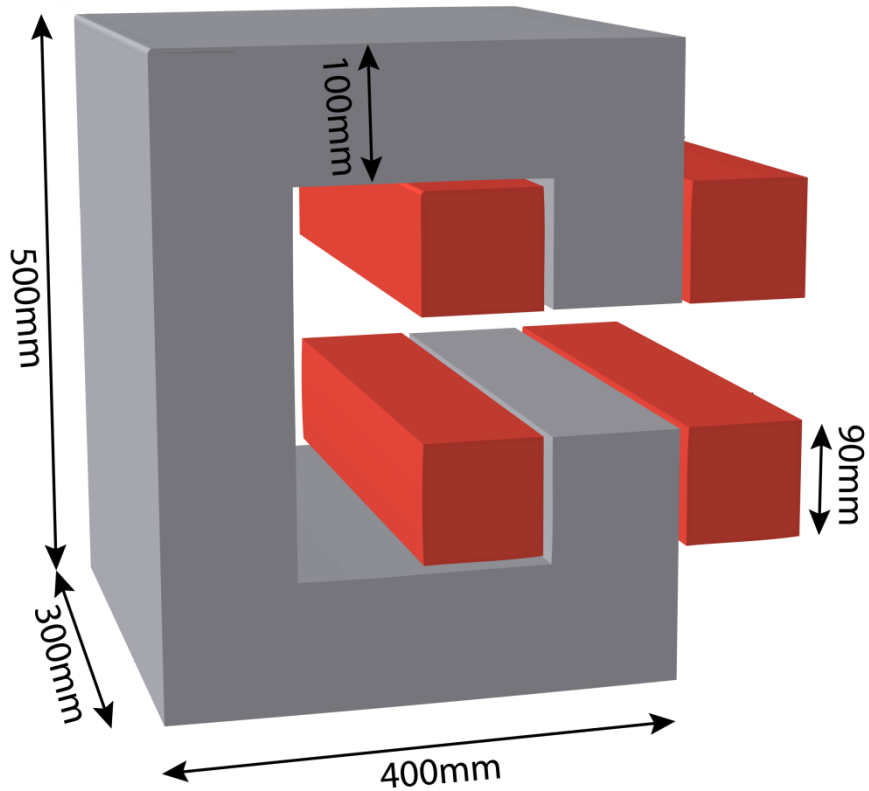

- Magnetic material: M15 (SiFe)
- Winding: two copper coils
- Air-gap length: 100 *mm*
- Coil fill factor of 100 % (illustrative)
- Selected current density: 3 A/mm^2
- Copper surface per half-coil: 8100 mm^2

Let's analyze the influence of turn number selection on power converter design for DC and pulsed operations

- Core losses do not change with number of turns (same magnetic flux)
- Copper losses do not change either:

$$R \cdot I^2 = \rho_{cu} \frac{l_t}{S_t} n_t (S_t \cdot J)^2 \Rightarrow \rho_{cu} V_{cu} J^2$$

Illustrative example - design sensitivity

- Reference solution– 24 turns/coil

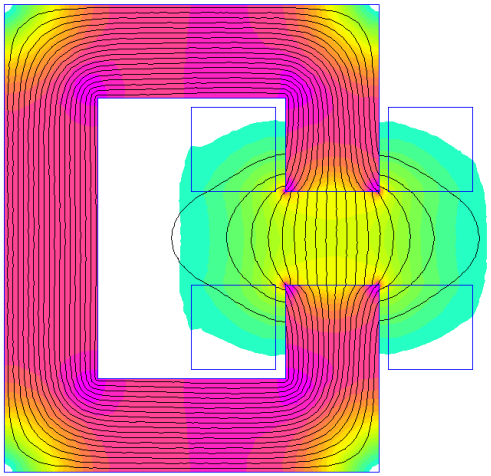

- Need for 0.6 *T* in the center of magnet air-gap
- With 24 turns/coil (48 total), a **1 *kA*** converter is required (respecting 3 *A/mm²*)
- In this case the magnet parameters are:
  - L_{Mag}=1.65 *mH*
  - R_{Mag}=1.47 *mΩ*
- Simple analytical relations for L_{Mag} & R_{Mag} vs. n_t

$$L_{Mag} \sim {n_t}^2 \rightarrow L_{Mag} = 1.65e^{-3}\left(\frac{n_t}{48}\right)^2$$

$$R_{Mag} = \rho_{cu}\frac{l_t}{S_{tot}}{n_t}^2 \rightarrow R_{Mag} = 1.47e^{-3}\left(\frac{n_t}{48}\right)^2$$

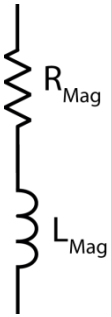

Mag. Induction in air-gap

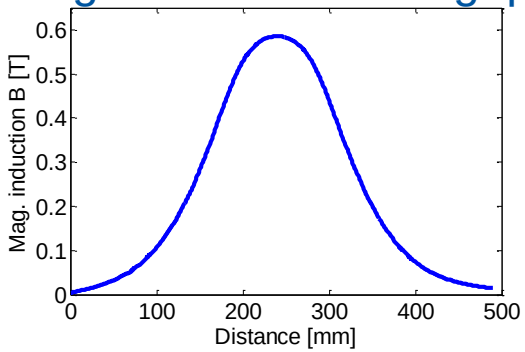

- For creating same field the current and voltage must be:

$$i_{Mag} = J\frac{S_{tot}}{n_t} = J \cdot \frac{16200}{n_t}$$

$$V_{DC} = R_{Mag} i_{Mag}$$

$$v_{Mag} = R_{Mag} i_{Mag} + L_{Mag}\frac{di_{Mag}}{dt}$$

Illustrative example - design sensitivity

- We would like to operate this magnet either in DC or pulsed operation (10 Hz) as follows:

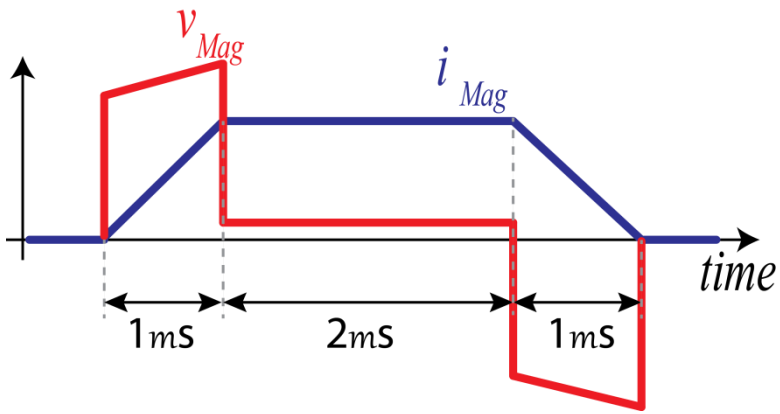

- Losses vs n_t in <u>DC operation</u>
  - Magnet: constant losses at 1.5 *kW*
  - Cables: proportional to i_{Mag} $(1/n_t)$ → $P_c = R_c i_{Mag}{}^2 = \rho_{cu} \frac{l_c}{S_c} i_{Mag}{}^2 = \rho_{cu}\, l_c J_c i_{Mag}$
  - Power converter: for constant power (~magnet losses) – roughly proportional to i_{Mag} $(1/n_t)$
- Losses vs n_t in <u>pulsed operation</u>
  - Magnet: constant losses at 40 *W*
  - Cables: $1/n_t$ (i_{Mag_rms}=0.163*i_{Mag} max)
  - Power converter: $1/n_t$ (roughly 15% of DC case losses)
  - Pulse transformer (if required):~3-5% losses

Advantages:
- Higher efficiency
- No water cooling
- Smaller cables

Drawback:
- Pulse transformer (if required…)

Illustrative example - design sensitivity

- Low turns number Operation

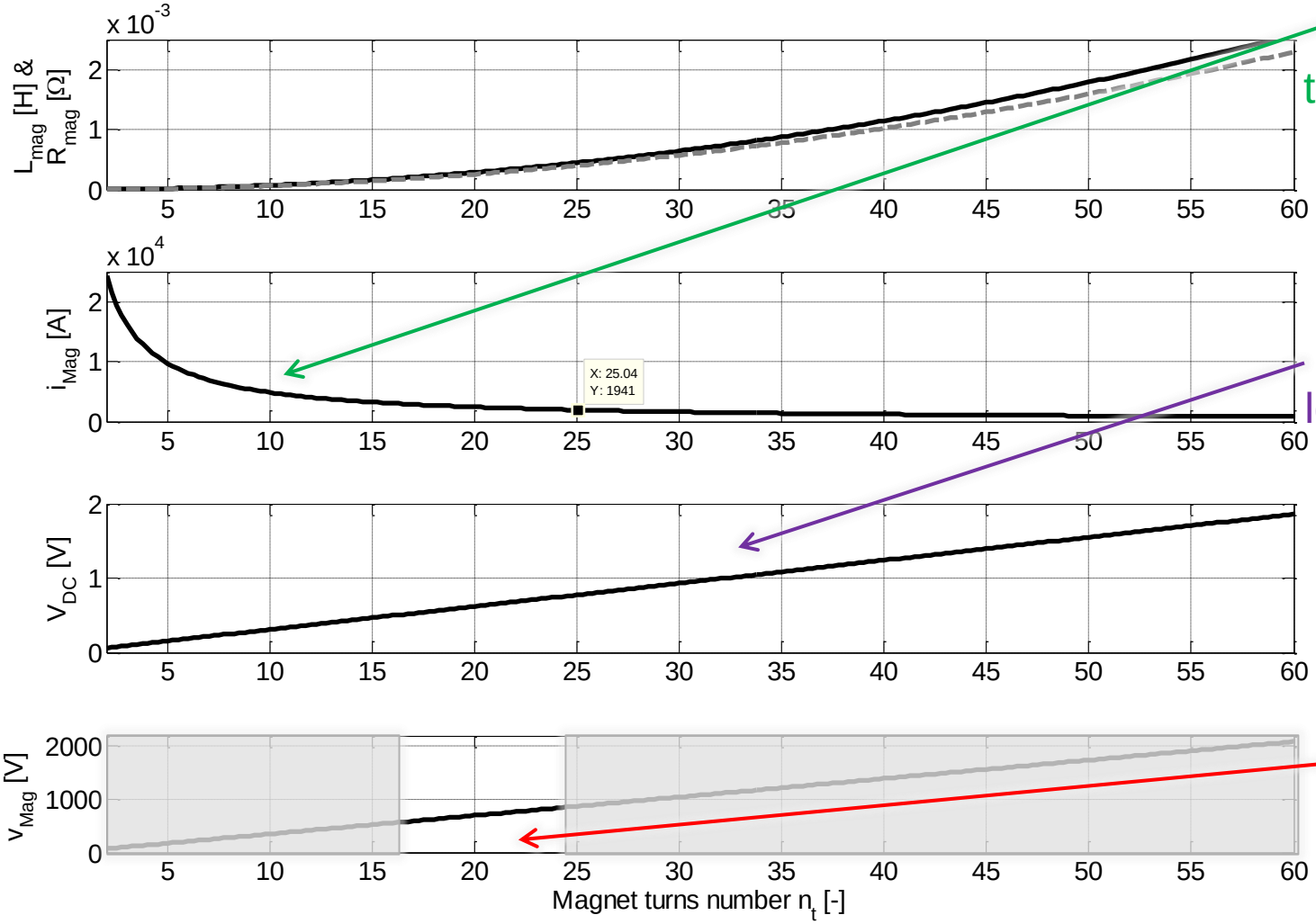

Magnet current quite high – pulse transformer if pulsed operation

DC operation difficult – very low voltage and many losses (high current)

Using simple IGBT-800V pulsed converter – optimal region where transformer not needed!

Illustrative example - design sensitivity

- High turns number Operation

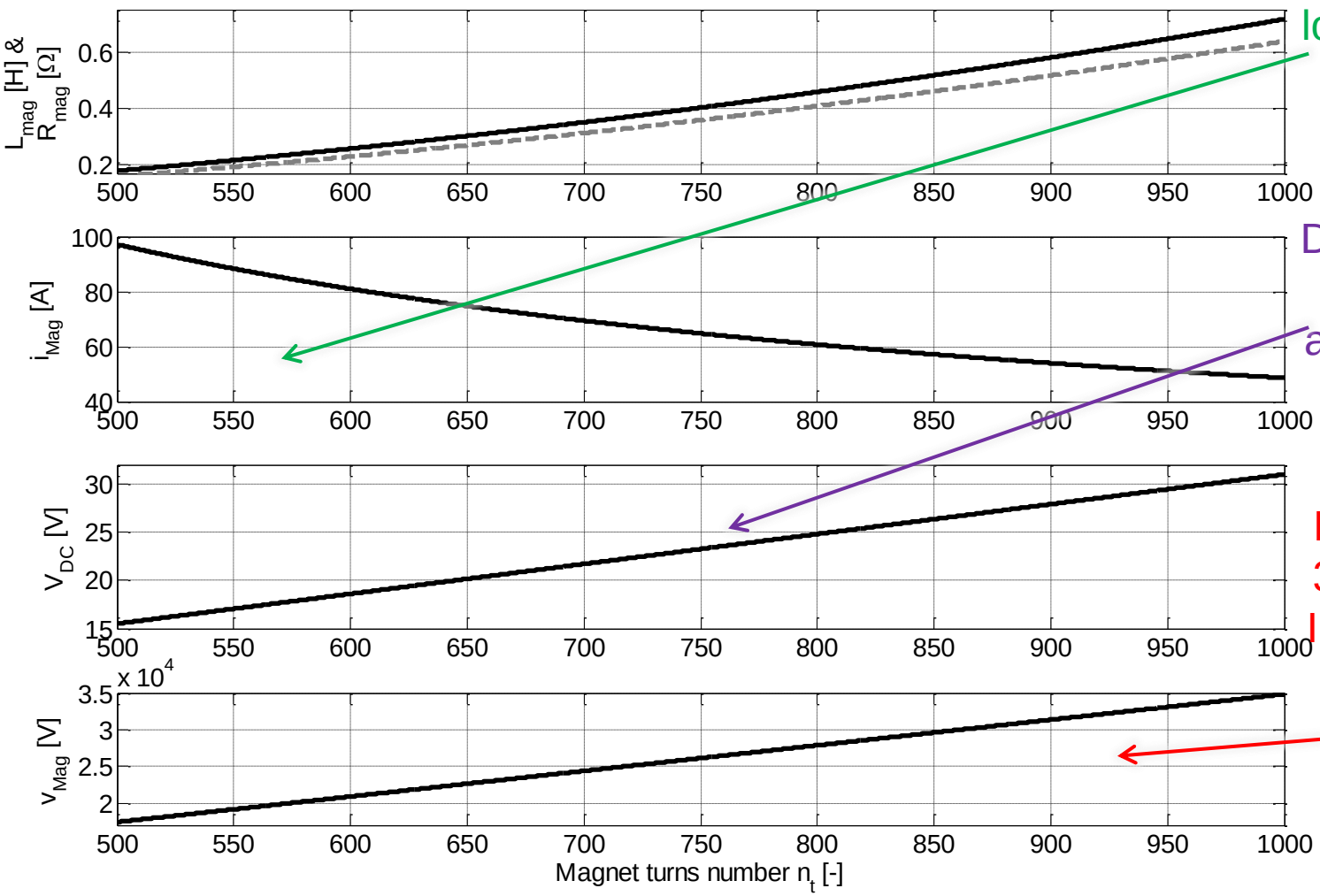

Magnet current very low– low converter lossws

DC operation ok! – commercially available solutions

Pulsed operation – 30 kV on magnet!!! Insulation problems on magnet and transformer – not compact!

Illustrative example - design sensitivity

- Pulsed operation – a word on cables length
  - Our magnet inductance is 46 µH with 8 turns and nominal current is 6.1 kA (always producing 0.6 T in air-gap).
  - Reducing current with pulse transformer

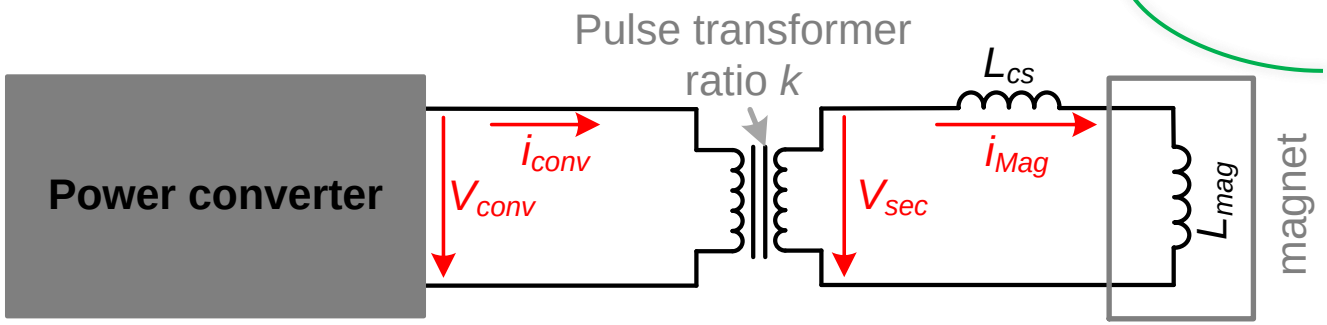

Typical 2 conductors cable inductance:
0.5 *µH/m* to 0.8 *µH/m*
For 50 m cable:
25 µH to 40 µH

- If magnet to transformer cable length increases, L_{cs} increases (can be higher than magnet inductance…)
- *di/dt* imposed by specs
- V_{conv} and V_{sec} increase as well!
- Power converter maximum power, volume, losses, and cost increase with cable length!!!

Magnet and pulse transformer integration shall be carried out at the same time.
Therefore Magnet-Converter system integrated design is necessary!

Illustrative example - design sensitivity

- Example summary
  - Analysis with extremely simple analytical approach (5 equations)
  - Losses can be integrated for an <u>optimisation process</u>

$$L_{Mag} = 1.65e^{-3}\left(\frac{n_t}{48}\right)^2$$

$$R_{Mag} = 1.47e^{-3}\left(\frac{n_t}{48}\right)^2$$

$$i_{Mag} = J \cdot \frac{16200}{n_t}$$

$$V_{DC} = R_{Mag} i_{Mag}$$

$$v_{Mag} = R_{Mag} i_{Mag} + L_{Mag}\frac{di_{Mag}}{dt}$$

- Converter design implications versus:
  - Number of turns? (presented here)
  - Magnetic material? saturation?
  - Current density selection?
  - Integrating a permanent magnet?

Let's work together!

Integrated design

- Optimal magnet design combined with optimal converter design does not give optimal solution!
- Integrated optimisation, even with simplified modelling gives much better solutions toward efficient, compact, and economic global systems

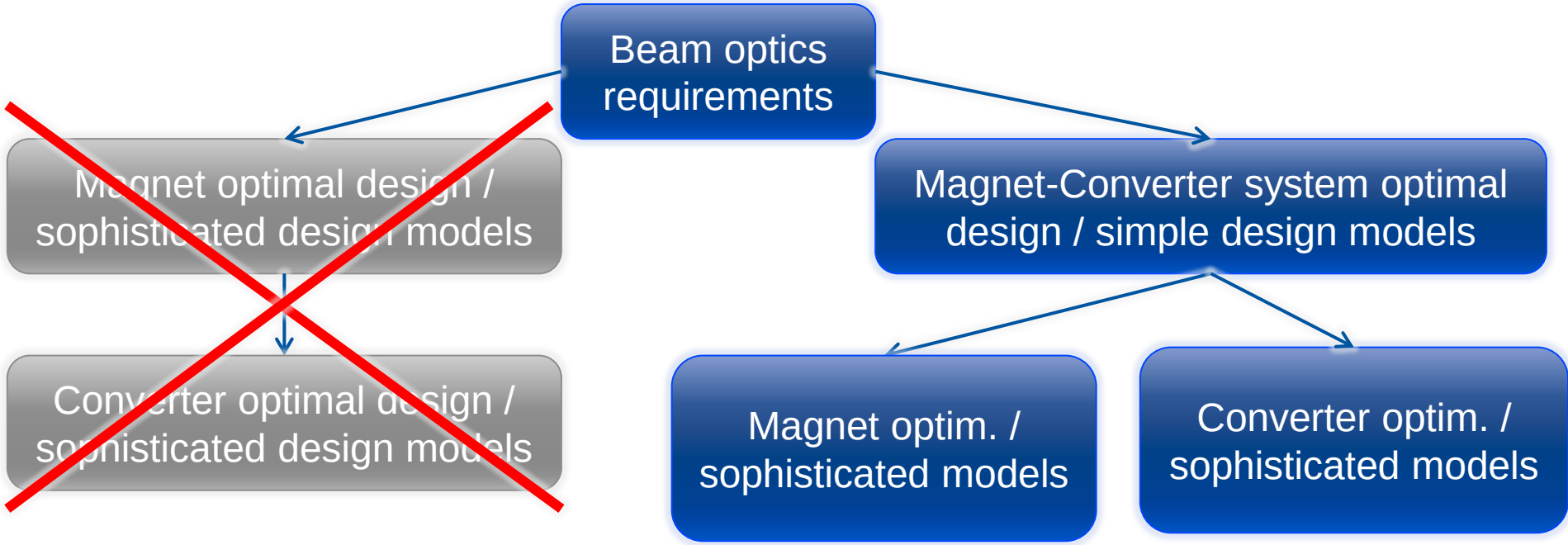

Not a globally optimal solution

Toward a globally optimal solution!

Conclusion

- Magnet design choices greatly affect power converter design
- In pulsed operation many variables intervene in the optimisation process
- To achieve optimal solutions in terms of efficiency, volume and cost the power and magnet designers shall work together!

Bibliography

- R. Erickson, D. Maksimovic, “Fundamentals of Power Electronics,” Kluwer Academic Publisher, 2001. ISBN 0-7923-7270-0, 883 p.

- CERN Accelerator School (CAS) on Power Converters 2014 https://indico.cern.ch/event/263328/other-view?view=standard

- D. Aguglia, “Pulse transformer design for magnet powering in particle accelerators,” 15th European Power Electronics Conf., 2013, pp. 1 – 9.

For fun: Converters efficiency, power density & cost

- Efficiency
  - Depends on topologies & technology: 10 *kW*-100 *kW* range between 90% and 98%!
- Power density (average power)
  - Depends on topology, technology, cooling capabilities, voltage level and how rich you are: wide range, from 10 W/dm^3 to 10 kW/dm^3
- Cost per kW (average power)
  - Again depends on many aspects: typical range: 0.5 *CHF/W* to 1.5 *CHF/W* (more for pulsed power)

www.cern.ch