CERN workshop on “Compact and Low Consumption Magnet Design for Future Linear and Circular Colliders”

Energy management at GSI and FAIR, strategy on energy management, efficiency, sustainability strategy

GSI – facts and figures

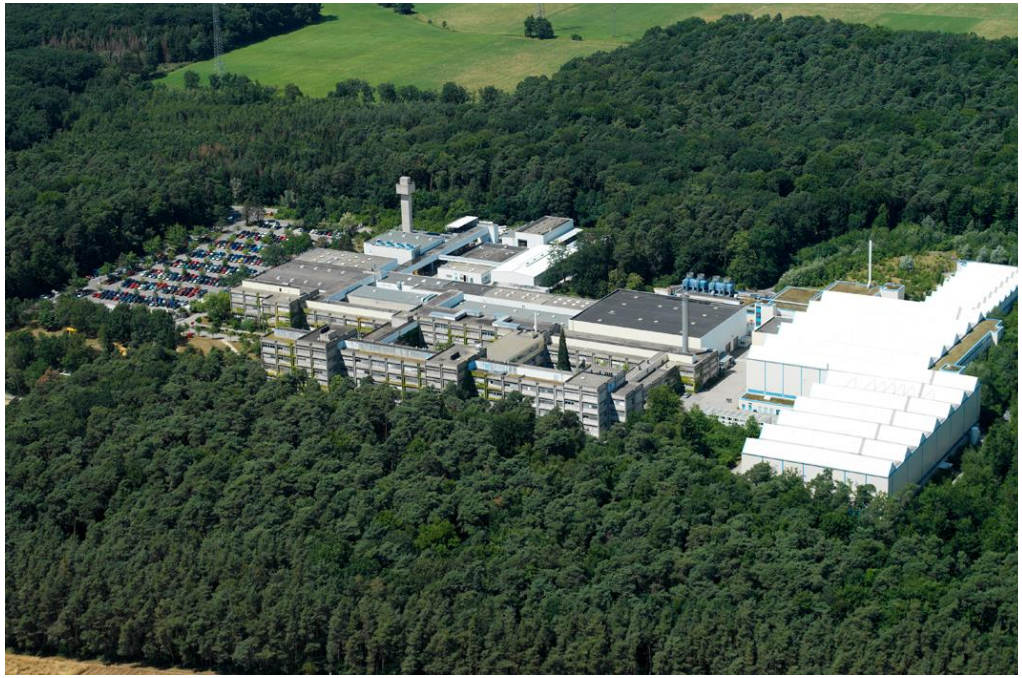

Large facility equipment	Linear Accelerator UNILAC Heavy Ion Synchrotron SIS Experimental Storage Ring ESR Fragment separator FRS Highenergy-/Highperformance Laser PHELIX Several large spectrometer and detector systems Medical irradiation facility for cancer therapy Participation in the ALICE detector of the European Organization for Nuclear Research CERN

Foundation	1969
Associates	Federal Republic of Germany (90%), State of Hesse (8%), State of Rhineland-Palatinate (1%), Free State of Thuringia (1%)
Member	Helmholtz-Gemeinschaft Deutscher Forschungszentren
Mission	Construction and operation of accelerator facilities and research with heavy ions
Budget	€108 million
Staff	1,075 employees, including 600 scientists and engineers
Visiting scientists	1,400 scientists from universities and research institutes all over the world, including more than 350 master and doctoral candidates
Apprenticeship	31 apprentices in technical and commercial professions
Young researchers	approx. 300 doctoral candidates in our graduate school HGS-HIRe for FAIR
Scientific cooperations	Global cooperations with approximately 400 institutes from more than 50 countries

Source: GSI

FAIR

FAIR
construction site

(July 2013)

Source: GSI

Energy management – yet to be implemented

Typical PDCA cycle in energy management

- Energy policy
- Objectives and action plans
- Energy review
- …

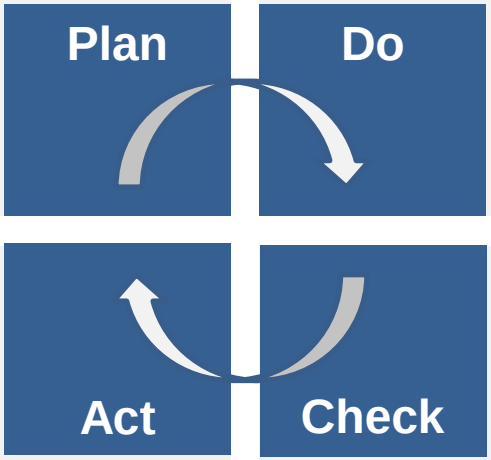

- Implementation and realization
- Operational control
- Awareness
- …

- Optimization
- New strategic goals
- Management review
- …

- Monitoring
- Analysis
- Corrective action
- Preventive Action
- Internal Audit

Source: www.wikipedia.de

GSI – Projects and efforts

- Energy efficient planning of new buildings
- Energy efficient redevelopment of outdated buildings and building services equipment
- **Green IT** – currently highest MFLOPS/W supercomputer located at GSI* (using watercooling instead of air cooling)
- Using backup power generator to minimize peak loads (**virtual power plant**)

- Installation of bus based energy meters at the Low Voltage Main Distribution
- Testing of different shutdown modes and the impact on reliebility on e.g. cooling systems

- Development of concepts for the FAIR facility
- Scientific work e.g. on load based cooling concepts and energy efficiency for magnet systems
- Establishing an Energy Efficiency Working Group

- Development in monitoring and analysis of energy consumption data
- Review of energy consuption in different operational modes and shut down
- Reduction of base load

*Source: http://www.green500.org/lists/green201411

GSI - energy consumption in 2012

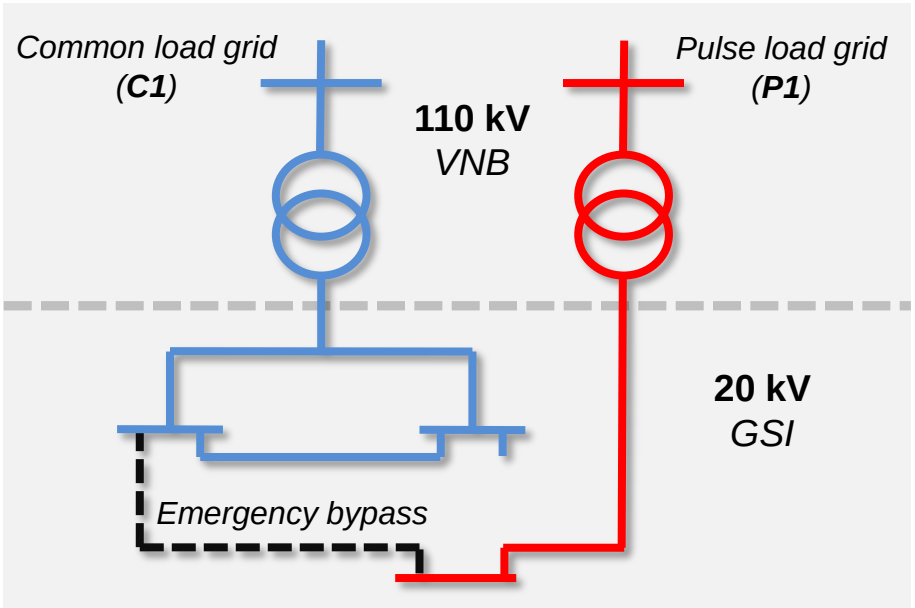

Electric energy consumption (GWh)

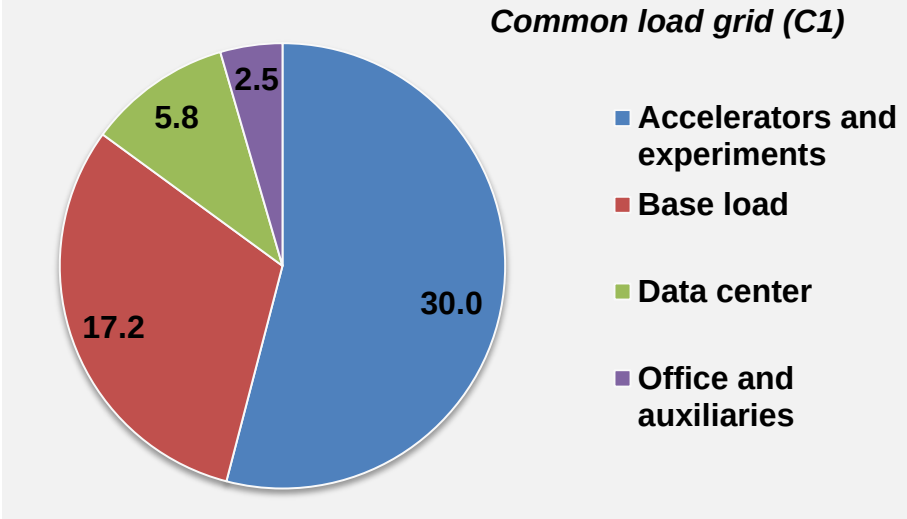

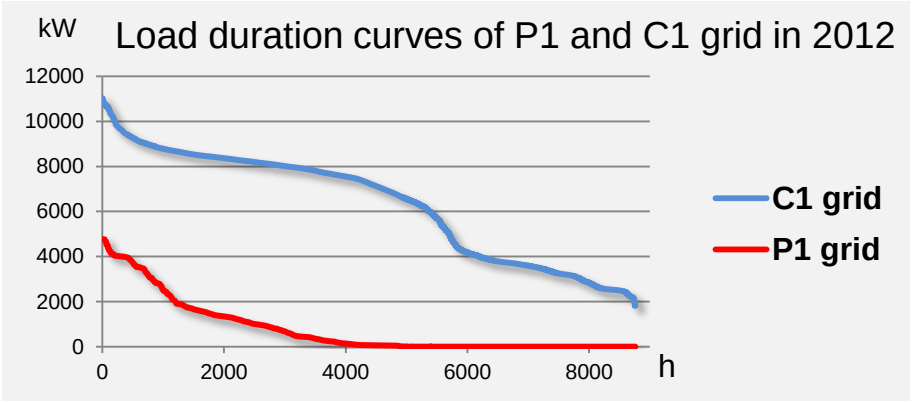

Summary of load and consumption in 2012

Consumption	Average power 2012	Energy consumption 2012
Common load grid (C1)	6,3 $MW_{electrical}$	55,5 $GW_{helectrical}$
Pulse load grid (P1)	0,8 $MW_{electrical}$	7,0 $GW_{helectrical}$
Natural gas	2,1 $MW_{thermal}$	18,3 $GWh_{thermal}$

GSI - C1 grid load duration curves

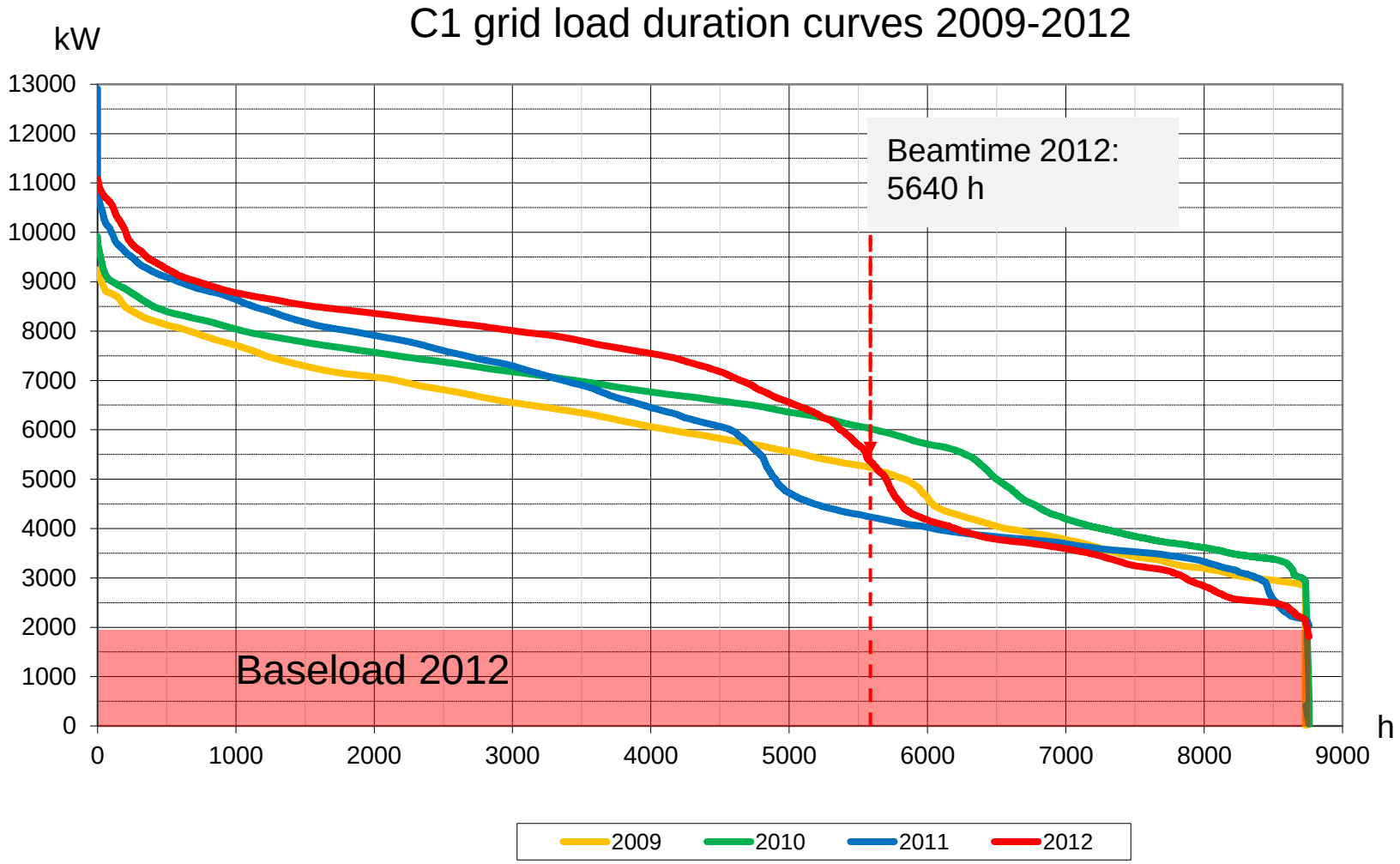

FAIR – planned electrical grid connection

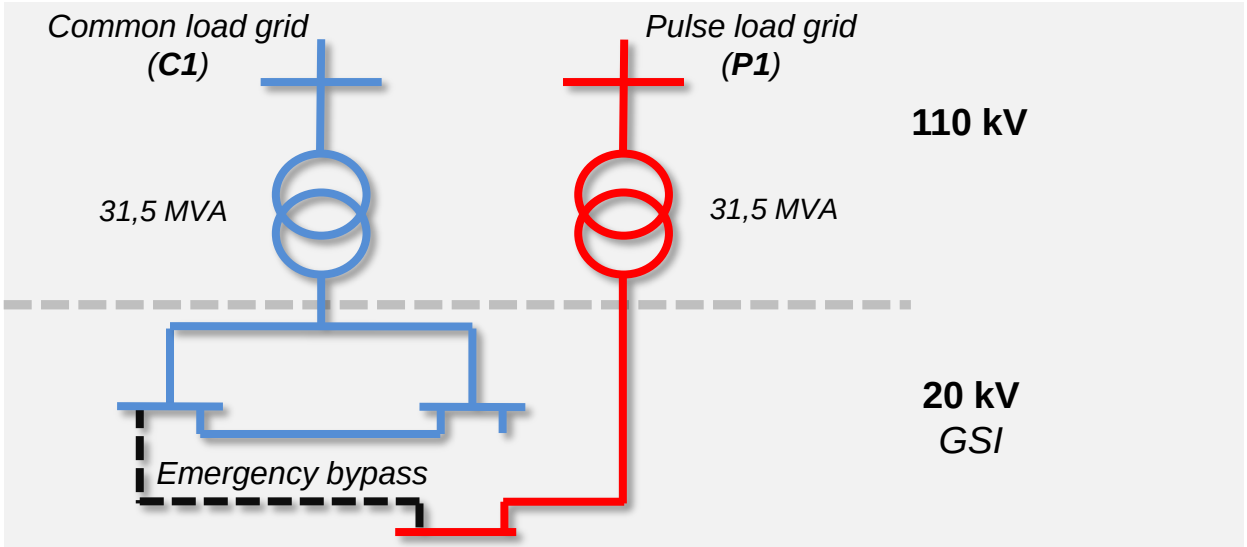

Current electrical energy connection at GSI

- two seperate grids due to the high pulse loads (up to 18 MW for 0,5 s) of SIS 18 and ESR

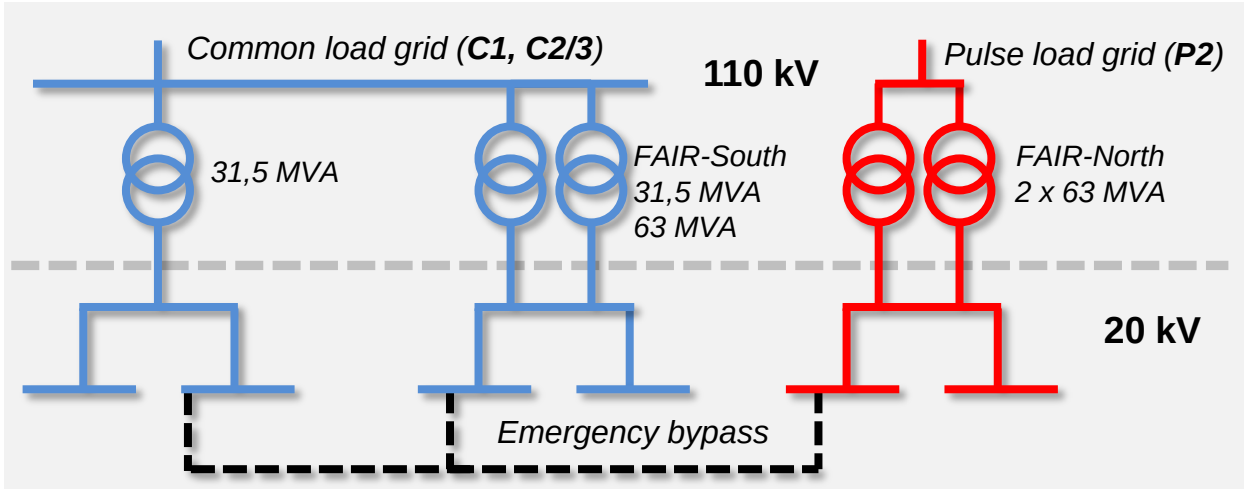

Planned electrical energy connection for FAIR (ready in 5/2017)

Electrical load at FAIR and GSI

GSI		FAIR
Current structure	Upgrade in progress	FAIR facilities
• GSI accelerator and experiments • GSI base load • GSI data center • GSI offices and auxiliary	• H=2 • Cryring • New southern buildings • Green IT-Cube	• Accelerator • Cryo facility • Experiments • Base load • Cooling systems
GSI total electrical energy consumption in **2012**: **62.5 GWh**	Additionally estimated electrical energy consumption for a **typical operation year**: approximately **360 GWh**	

Estimated energy consumption distribution for a typical year of operation FAIR

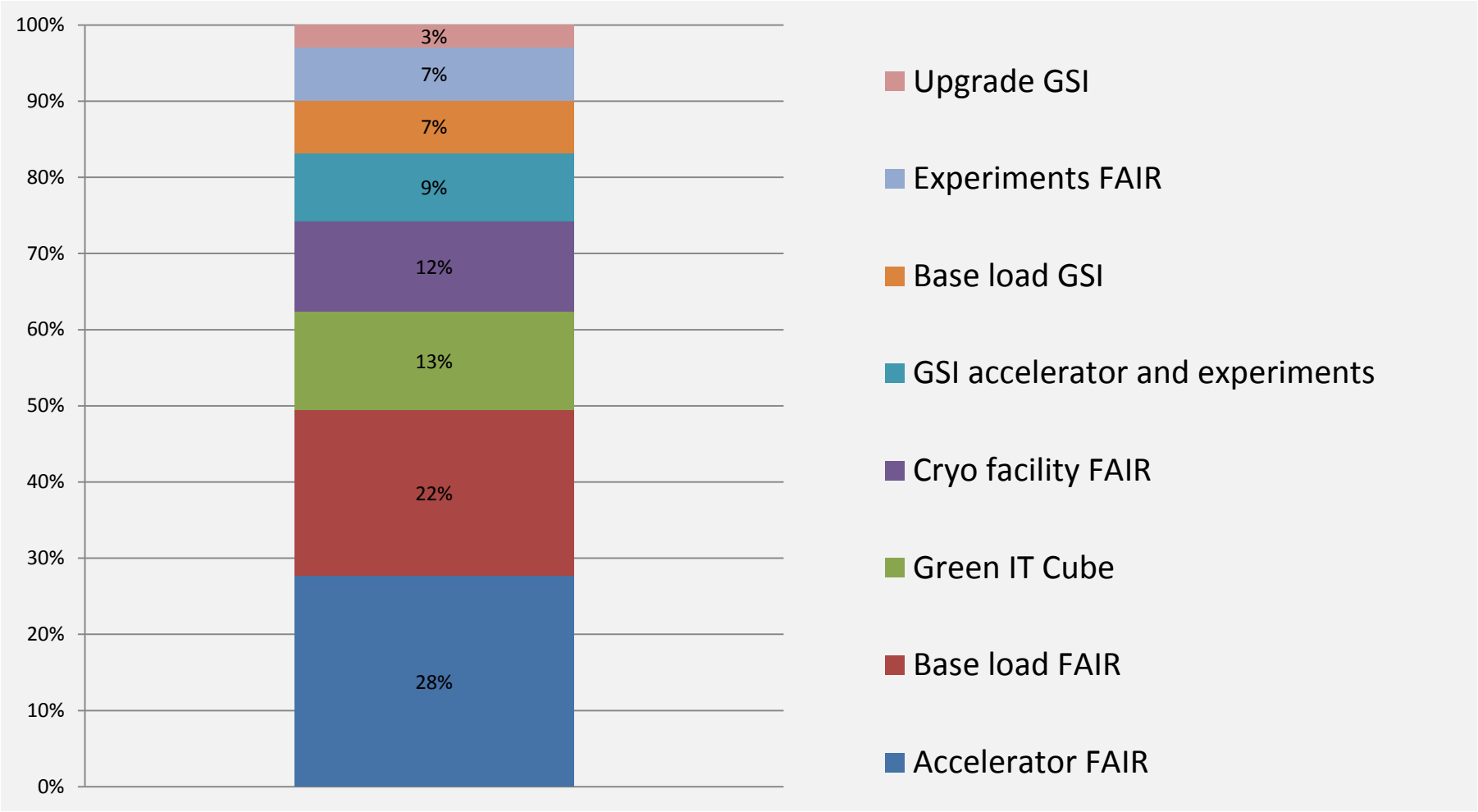

Typical operational scenario of FAIR with modular start version

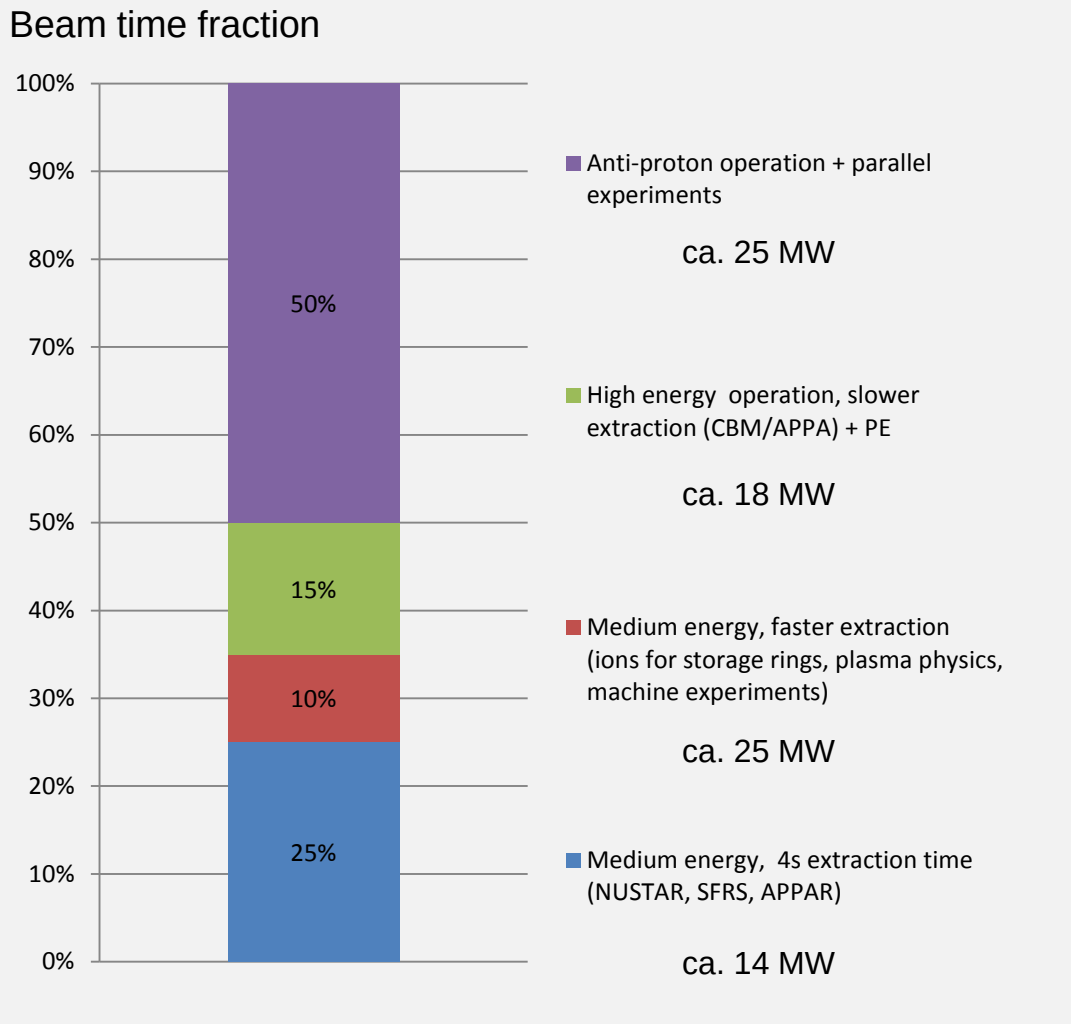

- Anti-proton chain from the p-LINAC
- Filling the pauses caused by beam cooling with ion cycles (PE)
- Every 15 min the pbar cycle pauses as the accumulation stops and HESR gets into experimental mode

- ion cycle including SIS18 and SIS100
- slow extraction to SFRS or APPA
- within slow extraction one more SIS18 cycle

- triangular ion cycle for SIS18 and SIS100
- beam to CR via SFRS or APPA

- SIS18 and SIS100 cycle with slow extraction (4s) to SFRS

Strategies for energy saving: Switch off unused part of HEBT

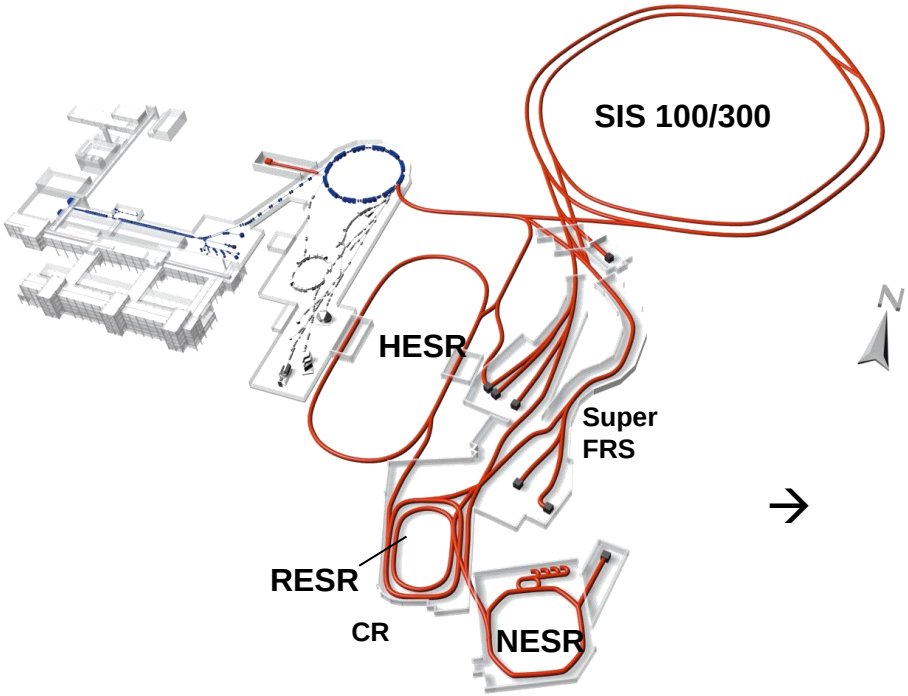

→

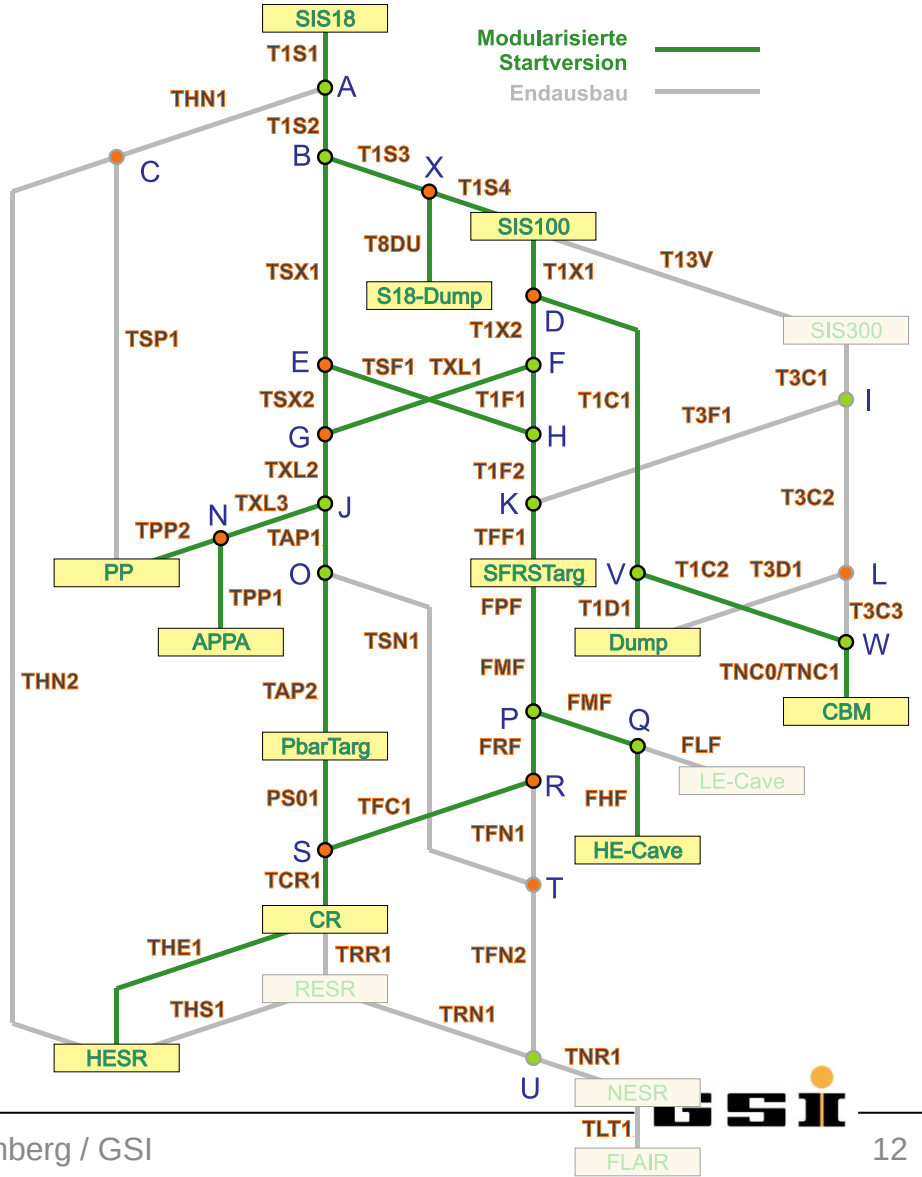

Parallel operation of several experiments require flexible HEBT

→ Switch off unused part of HEBT
→ Require control system

Strategies for energy saving: Pulsing beam lines with low repetition rate

Example: beam line from CR to HESR

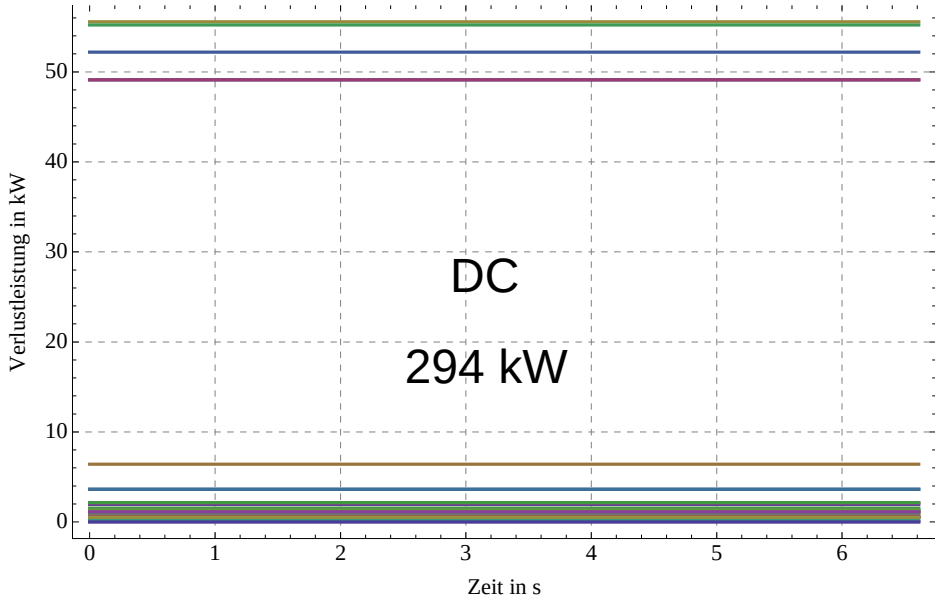

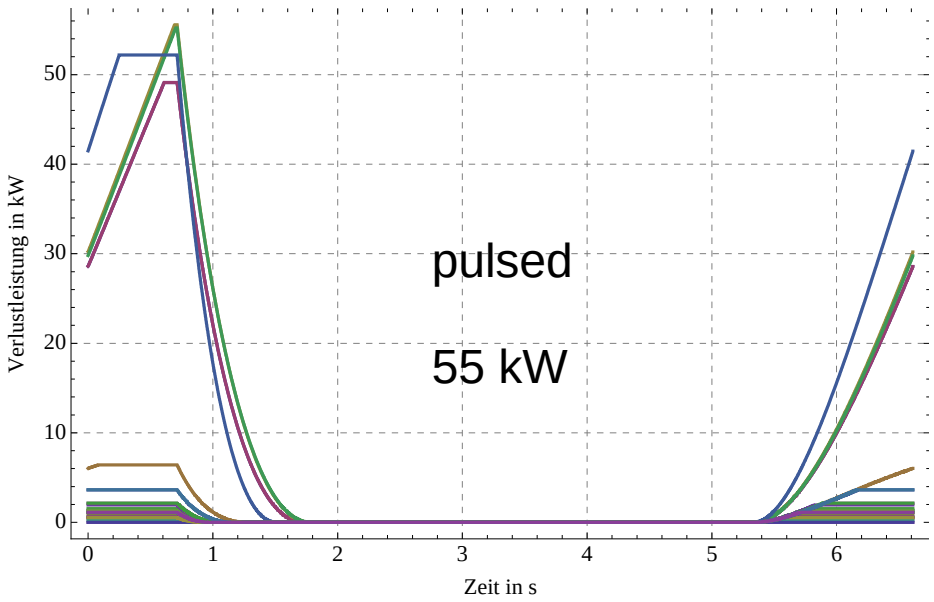

Beam line gets beam every 6,5 seconds (fast extraction).
Pulsing the beam line will safe 45 k€ per year.
Power converter upgrade (not build yet) would cost only 13 k€.

Strategies for energy saving: Switch off watercooling while Shutdown

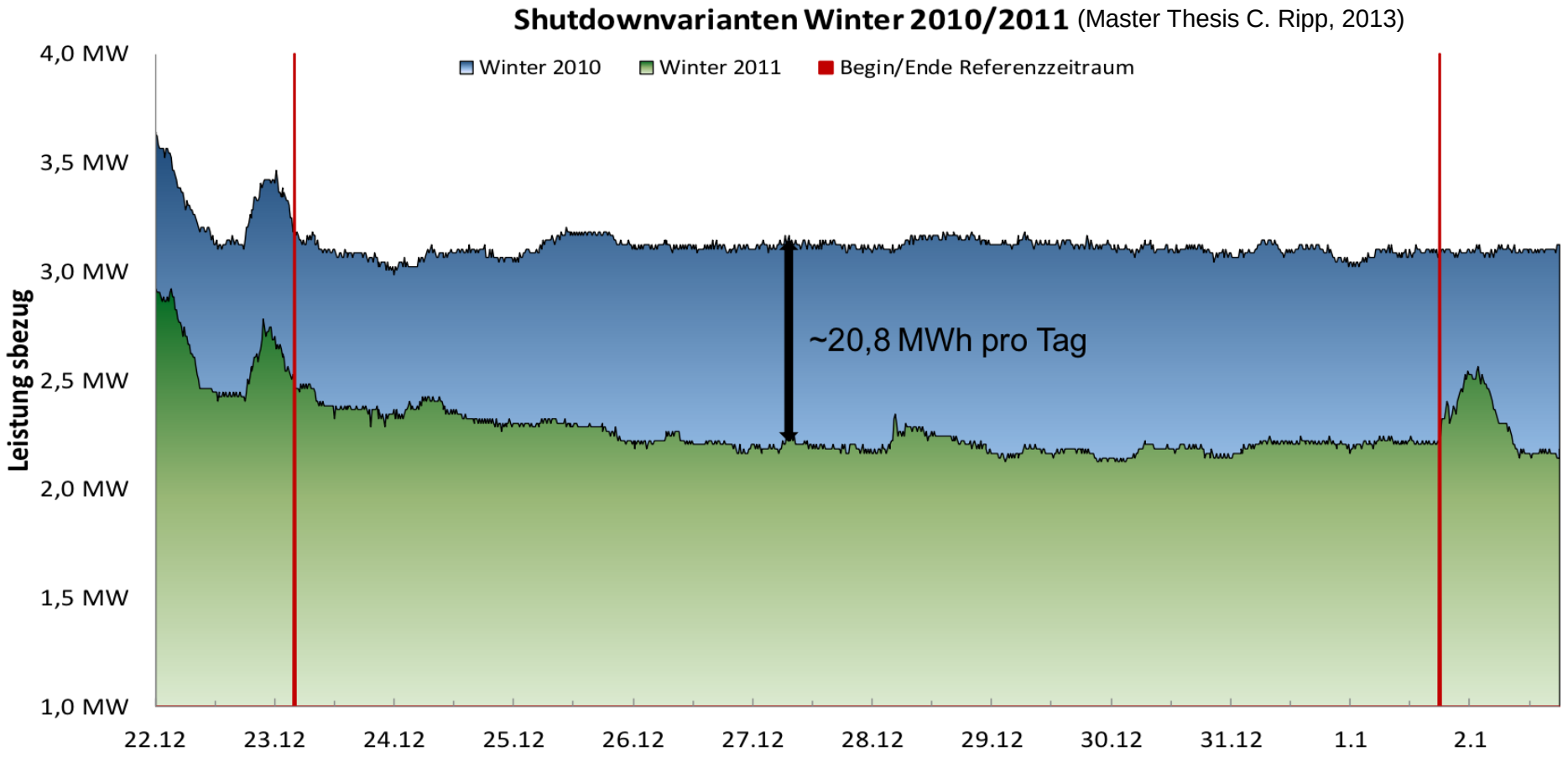

Switch off watercooling while Shutdown → decrease base load by ~20,8 MWh/day

Summary

- Realise a Plan-Do-Check-Act cycle for energy management

- Examples for energy saving strategies:
  - Green IT - currently highest MFLOPS/W supercomputer (H2O instead of air)
  - Using emergency power aggregate as virtual power plant
  - Switch off unused part of HEBT
  - Pulsing beam lines with low repetition rate
  - Switch off watercooling while Shutdown

Green500 Rank	MFLOPS/W	Site*	Computer*	Total Power (kW)
1	5,271.81	GSI Helmholtz Center	L-CSC - ASUS ESC4000 FDR/G2S, Intel Xeon E5-2690v2 10C 3GHz, Infiniband FDR, AMD FirePro S9150 Level 1 measurement data available	57.15
2	4,945.63	High Energy Accelerator Research Organization /KEK	Suiren - ExaScaler 32U256SC Cluster, Intel Xeon E5-2660v2 10C 2.2GHz, Infiniband FDR, PEZY-SC	37.83
3	4,447.58	GSIC Center, Tokyo Institute of Technology	TSUBAME-KFC - LX 1U-4GPU/104Re-1G Cluster, Intel Xeon E5-2620v2 6C 2.100GHz, Infiniband FDR, NVIDIA K20x	35.39