Advanced RF Acceleration

Sami G. Tantawi, V. Dolgashev, Aaron Jansen, Michael Fazio, Mark Kemp, Jeff Neilson, and Zenghai Li, and Collaborators

U.S. DEPARTMENT OF ENERGY
Office of Science

SLAC NATIONAL ACCELERATOR LABORATORY

Outline

- Advances for accelerator structures
- Novel Linac Topologies
- Mm-wave accelerators
- New RF sources:
  - Klystrons
  - Novel Multidimensional sources
  - Novel mm-wave/THz CSR-maser
- Summary

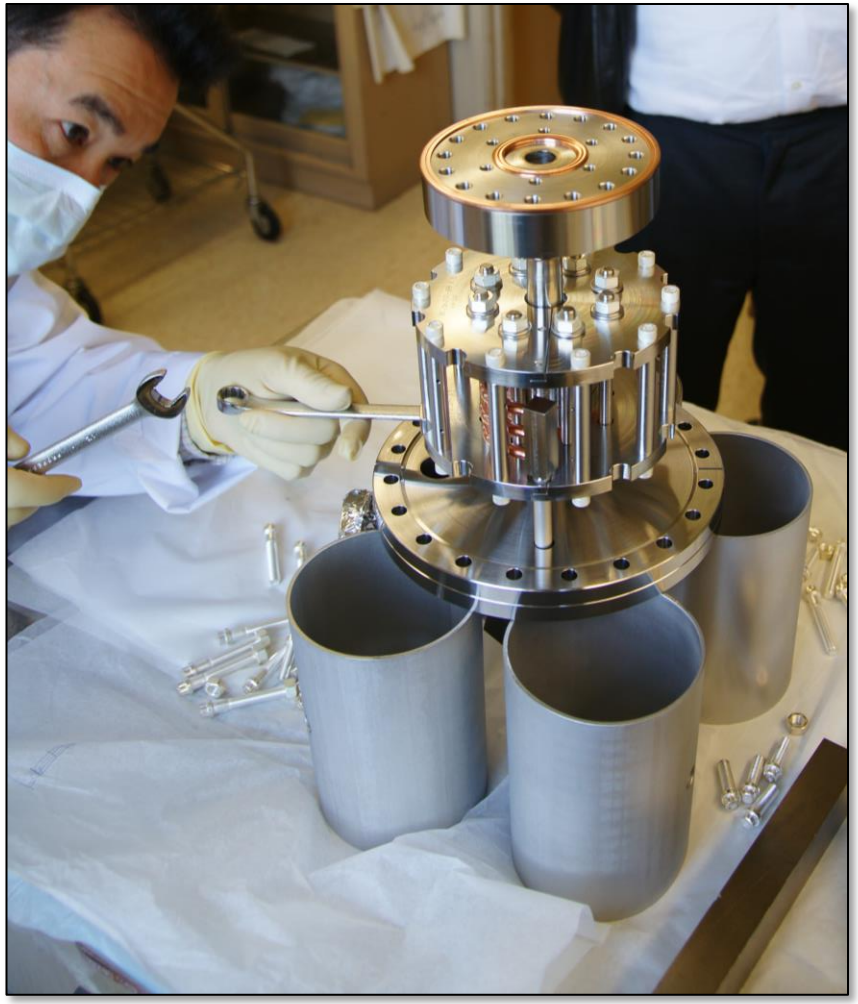

Clamped structure for testing without brazing

Traditional approach's to linear collider designs

SLAC

Beam parameters (***roughly 10 MW CW beam power***)

Technology Choice:
- Superconducting
- Normal
- Operating Frequency

Structure Design
- Normal conducting structure at X-band-Ka band ***in hope of a high gradient operation***
- Superconducting Structures ***in hope of a reliable high efficiency system.***

Power source options
- High power klystrons
- Pulse compression system
- Two beam systems (with high power klystrons for the drive beam system)

Modulator options
- Extremely High voltage modulators for normal conducting system, which require even more inefficient pulse compression system
- Long pulse modulators for superconducting and two beam systems

The end result: Inefficient, very expensive systems and very awkward expansion road maps

Our current approach to an efficient cost effective system

SLAC

Beam parameters (***roughly 10 MW CW beam power***)

An Integrated approach that includes:

- Basic physics unbdersyttanding of the high gradient phenomenon in normal conducting structures
- Novel structure designs that includes both efficient normal and superconducting structures.

Highly efficient RF sources based on:

- Novel transformational ideas
- The development of modern basic physics simulation tools.
- Taking the modulator design into account and demanding a low voltage operation

Modulator:

Intelgent modulators with feed back loops to recover the energy from both the rf source and the accelerator structures

- Efficient Structures operating well above 150 MV/m for normal conducting structures; at high frequencies we are looking at well above 1 GV/m structures
- Efficient superconducting structures with gradients ~ 70 MV/m, with possibilities of operating at temperature ***higher*** than 1.8 K

The end result we hope: very efficient, and consequently law cost, systems with a clear expansion road maps

This research was made possible by a very strong National and International

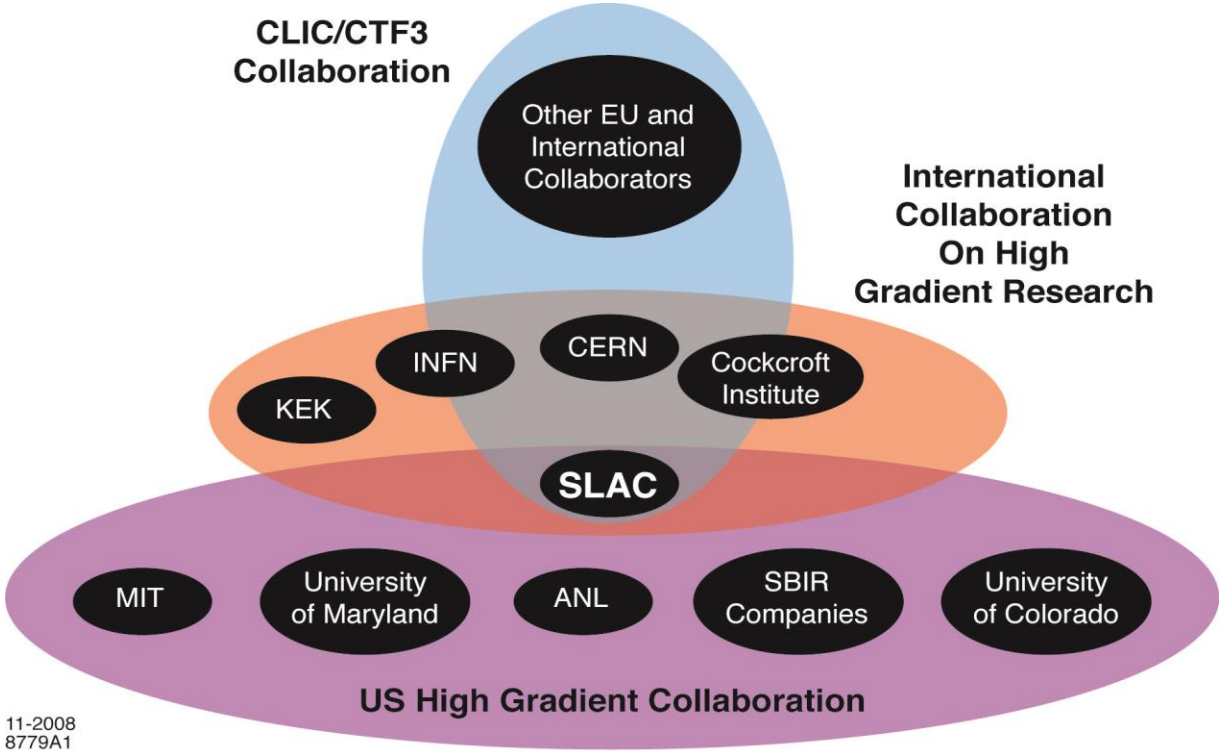

B.C. (Before Collaboration) There Were Conjectures, Voodoo-like Conclusions, and God-Given Scaling Laws…

SLAC

- Surface cleanliness would lead to ultimate gradient
- Ultimate gradient goes as $freq^{1/2}$
- Impedance match (architecture of RF system- source, pulse compressors, cavity, etc) would affect ultimate gradient
- Peak gradient is correlated with peak surface electric field
- Magnetic fields were irrelevant
- Refractory metals would provide the best path
- Dark currents are prime cause for breakdown and suppressing them would improve performance

Attacked these one by one and ALL had misconceptions

A.C. (After Collaboration)

- Extended gradient limit from ~65 MV/m to 175 MV/m – *6x the gradient of superconducting structures*
- Discovered the breakdown mechanisms in normal conducting RF accelerators
- Explored other applications for high gradient technology
- *RF sources, modulators, and RF components, were not included in this effort because this program was not an umbrella to continue the existing pre-2006 status quo*

Program has fundamentally changed our understanding and the way we design, build, and test high gradient accelerators.

Geometrical Studies:

Standing-wave structures with different iris diameters and shapes

a/λ=0.215, a/λ=0.143, and a/λ=0.105

SLAC,KEK, INFN

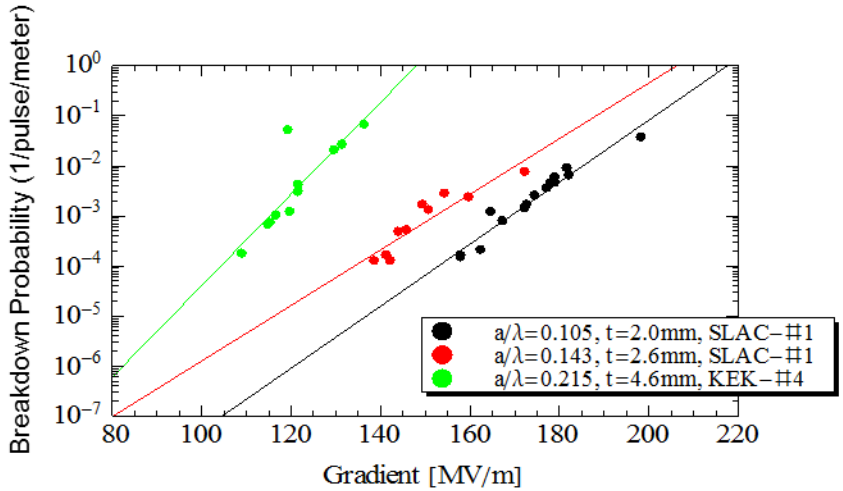

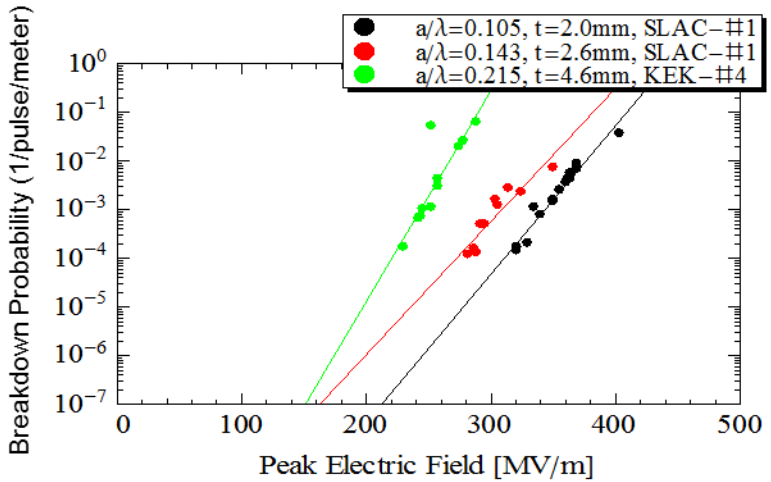

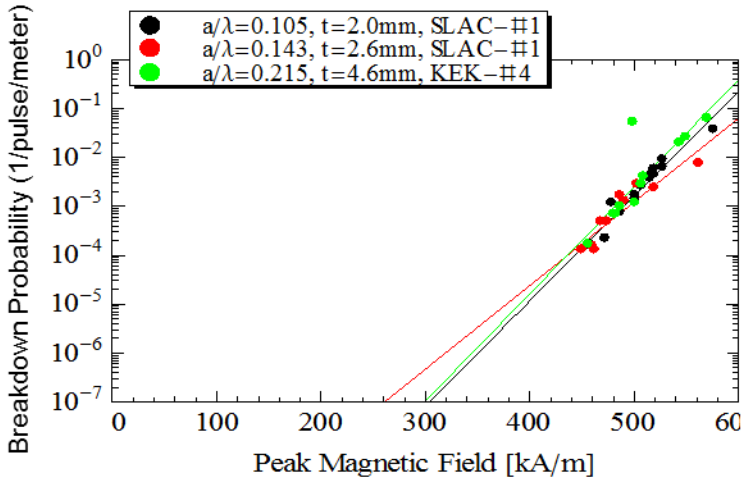

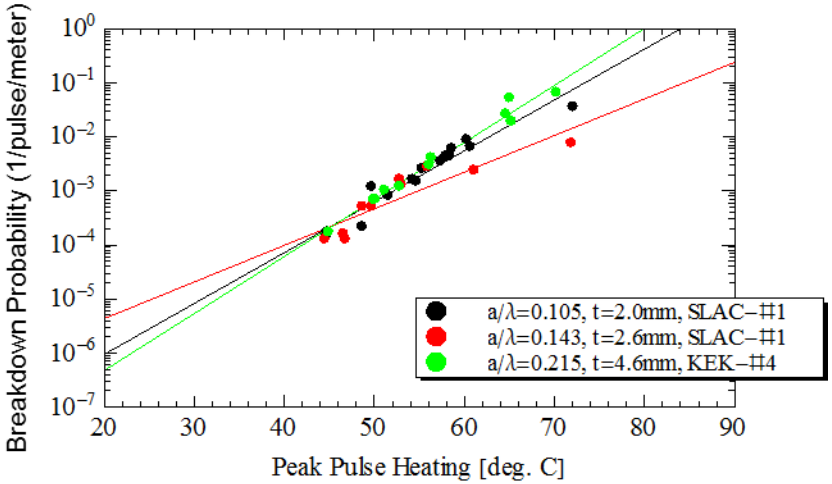

Pulsed heating and crystal orientation

Annealed Copper with large grain shows crystal pattern because damage is different for each crystal orientation

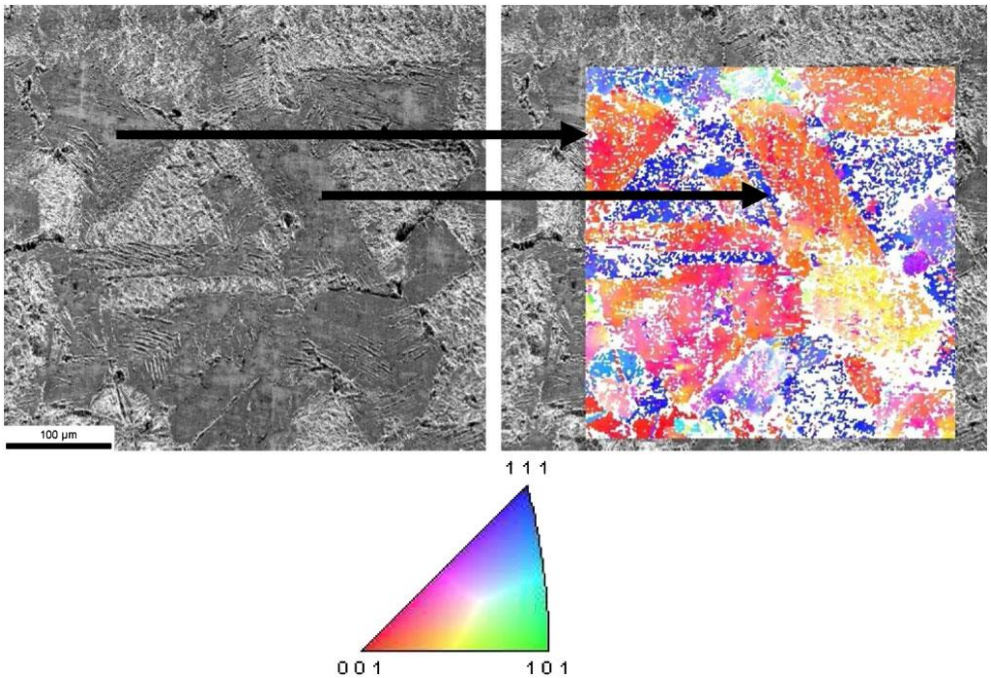

New Discovery of Magnetic Fields Role in Breakdown Triggered a Change in Research Direction

SLAC

- New research initiated
  - Geometry optimizations for accelerator structures based on reduction of the magnetic surface field
  - Studies of surface magnetic fields and materials
  - Basic Physics studies with mixed E&H dual-mode cavities
  - Low temperature experiments with very high gradient structures
- Applications of new information
  - A new methodology for designing Photonic Band Gap (PBG) structures
  - New understanding of MUON cooling cavity results in operation under strong magnetic fields
  - Improved design of high peak power rf sources

Discovery of magnetic heating effect is already making an impact in design of high power rf structures

High Gradient Accelerator Structure Martials (Copper Alloys, CuAg)

- Motivation:
  - Based on our understanding of the breakdown phenomon we predict an enhanced performance of CuAg (0.08% Ag)
- Status:
  - First hard CuAg#1 had record performance compared with any other structure we tested.
  - We are now testing the third structure to with great success, varying that the consistency of the results of this type structure.
  - We are also studying the processing time and methodology which is apparently different than pure Cu

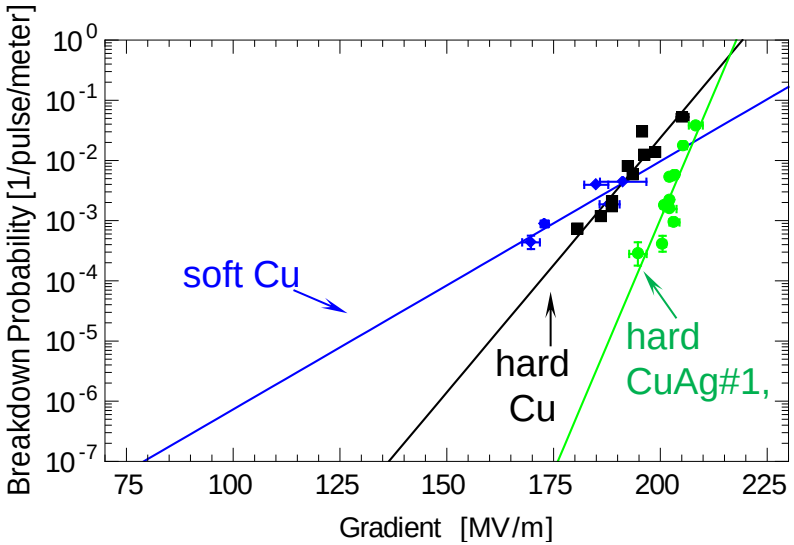

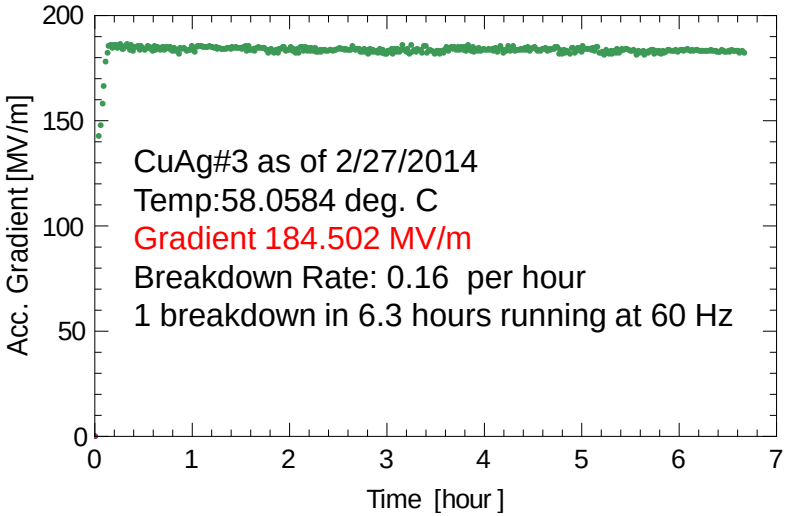

Ongoing test: Cryogenic Testing of normal conducting accelerating structures

- To design the structure we used our detailed measurements for copper conductivity at 11.424 GHz using specialized cavities

- Conductivity increases (by a factor of 17.6 at 25K), enough to reduce cyclic stresses.

- The yield strength of copper also increases.

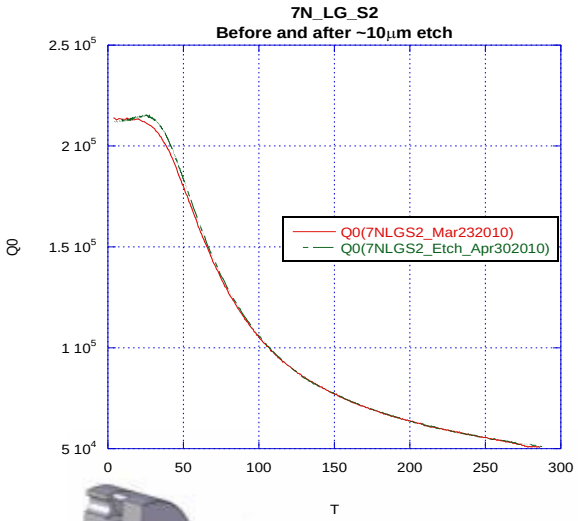

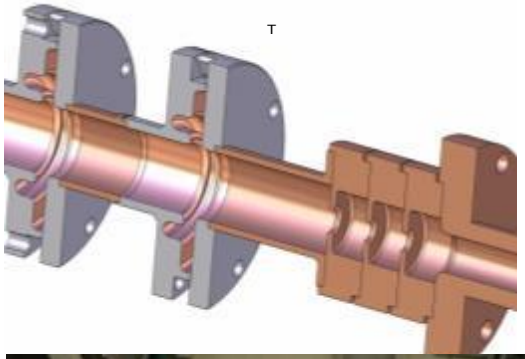

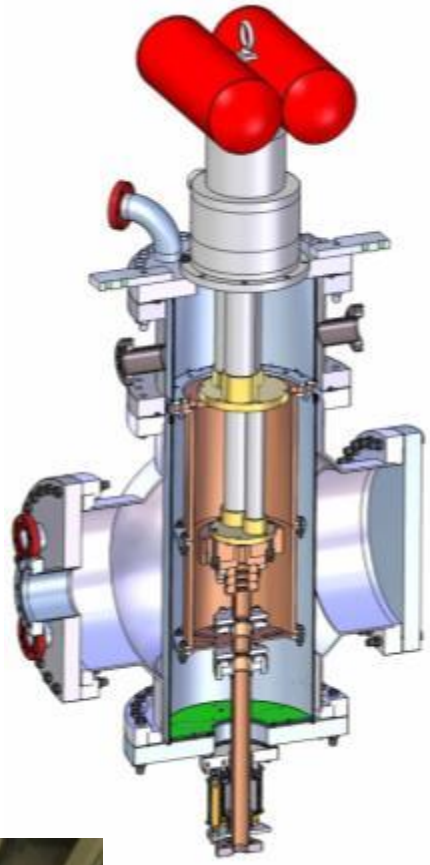

Recent results of the cryo-cooled normal conducting structure

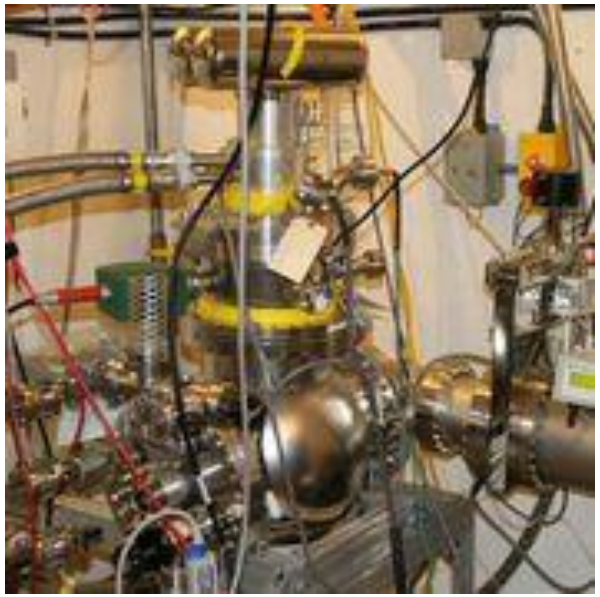

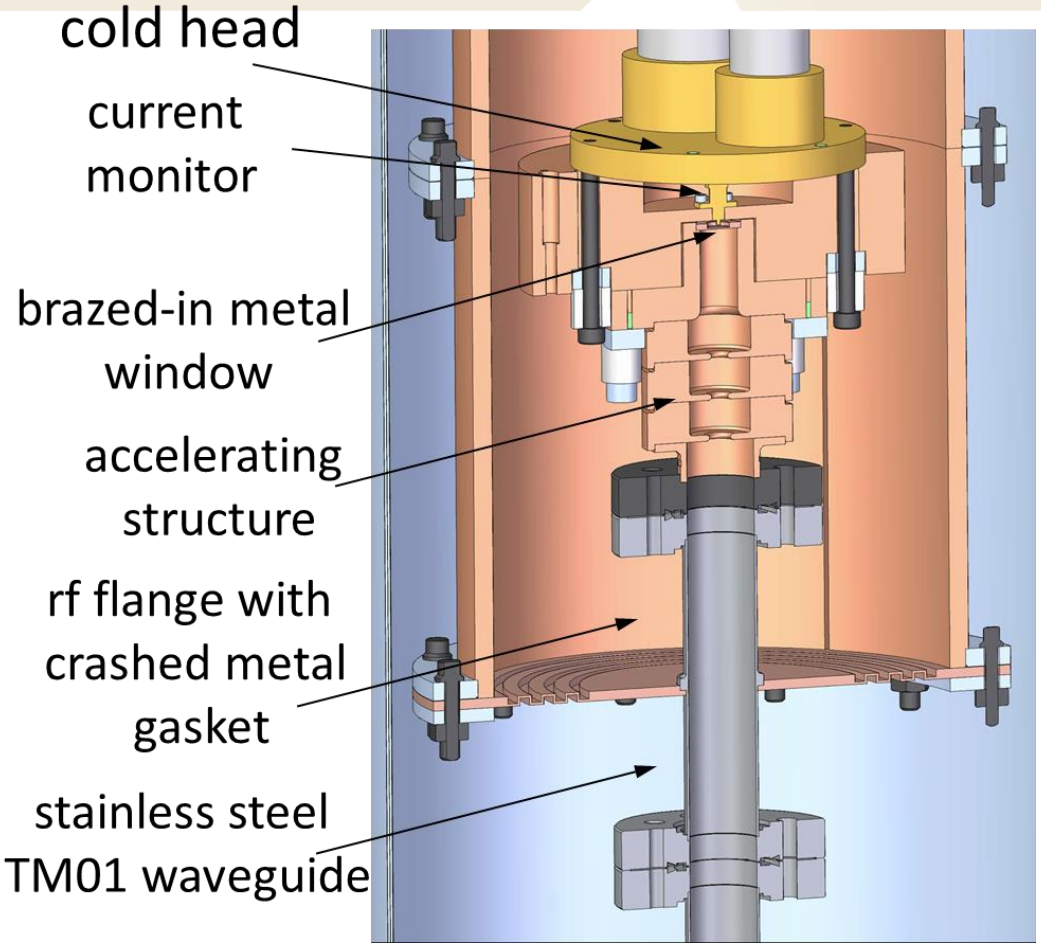

Structure is running now at an ***accelerating gradient of 300 MV/m*** with a breakdown rate ~ 10^{-6} /pulse/meter.

Distributed coupling accelerator structure

SLAC, KEK

Optimizing the individual cell shape compromises the coupling between cells, hence, we needed to invent a method for distributed coupling:

- A patent will be filled by Stanford university's Office of Technology Licensing
- The structure can be build using brazing and diffusion bonding processes because the directional coupler and the bends are manufactured on the same cell plate
- This most suitable for normal conducting high repetition rate applications
- There are interest from Some industrial firms to license this technology

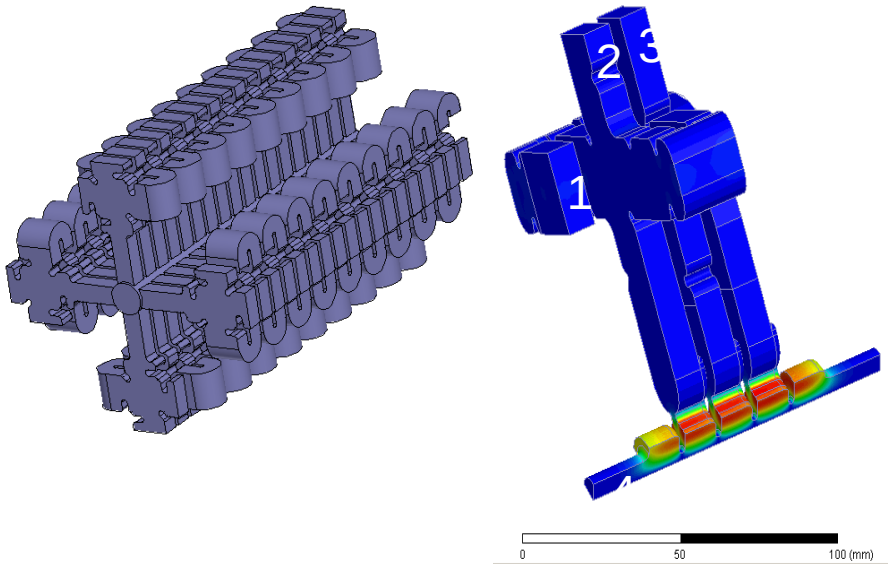

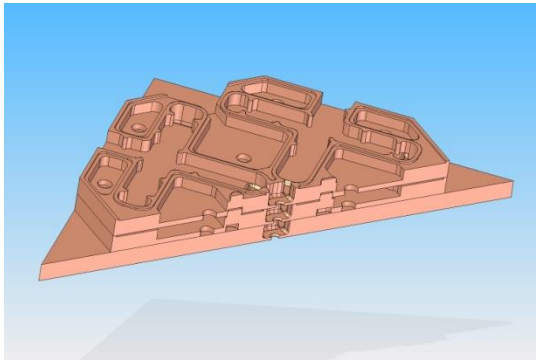

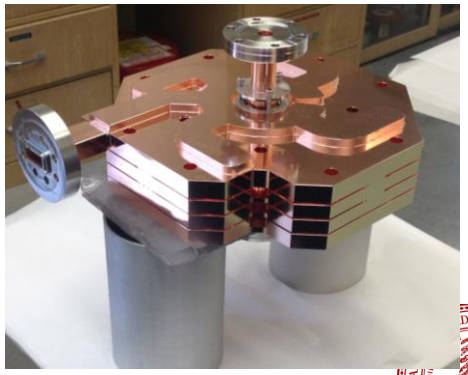

Highly efficient accelerator Structure

Freq	S:1:1	S:2:1	S:3:1	S:4:1	S:5:1	S:6:1	S:7:1	S:8:1	S:9:1
9.3 (GHz)	1:1 (0.011976, -172)	(0.35205, -106)	(0.35223, -106)	(0.35256, -107)	(0.35302, -108)	(0.35346, -108)	(0.3541, -108)	(0.35492, -108)	(0.35587, -109)
	2:1 (0.35205, -106)	(0.87457, -30.3)	(0.12549, 149)	(0.12561, 148)	(0.12577, 148)	(0.12593, 147)	(0.12616, 147)	(0.12645, 147)	(0.12679, 147)
	3:1 (0.35223, -106)	(0.12549, 149)	(0.87443, -30.3)	(0.12569, 149)	(0.12585, 149)	(0.12601, 148)	(0.12624, 148)	(0.12653, 148)	(0.12687, 148)
	4:1 (0.35256, -107)	(0.12561, 148)	(0.12569, 149)	(0.87417, -30.4)	(0.126, 150)	(0.12616, 150)	(0.12639, 149)	(0.12668, 149)	(0.12702, 149)
	5:1 (0.35302, -108)	(0.12577, 148)	(0.12585, 149)	(0.126, 150)	(0.87381, -30.5)	(0.12639, 151)	(0.12662, 150)	(0.12691, 150)	(0.12725, 150)
	6:1 (0.35346, -108)	(0.12593, 147)	(0.12601, 148)	(0.12616, 150)	(0.12639, 151)	(0.87345, -30.6)	(0.12687, 151)	(0.12717, 151)	(0.1275, 151)
	7:1 (0.3541, -108)	(0.12616, 147)	(0.12624, 148)	(0.12639, 149)	(0.12662, 150)	(0.12687, 151)	(0.87294, -30.7)	(0.12755, 152)	(0.12789, 152)
	8:1 (0.35492, -108)	(0.12645, 147)	(0.12653, 148)	(0.12668, 149)	(0.12691, 150)	(0.12717, 151)	(0.12755, 152)	(0.87232, -30.9)	(0.12842, 154)
	9:1 (0.35587, -109)	(0.12679, 147)	(0.12687, 148)	(0.12702, 149)	(0.12725, 150)	(0.1275, 151)	(0.12789, 152)	(0.12842, 154)	(0.87164, -31.1)

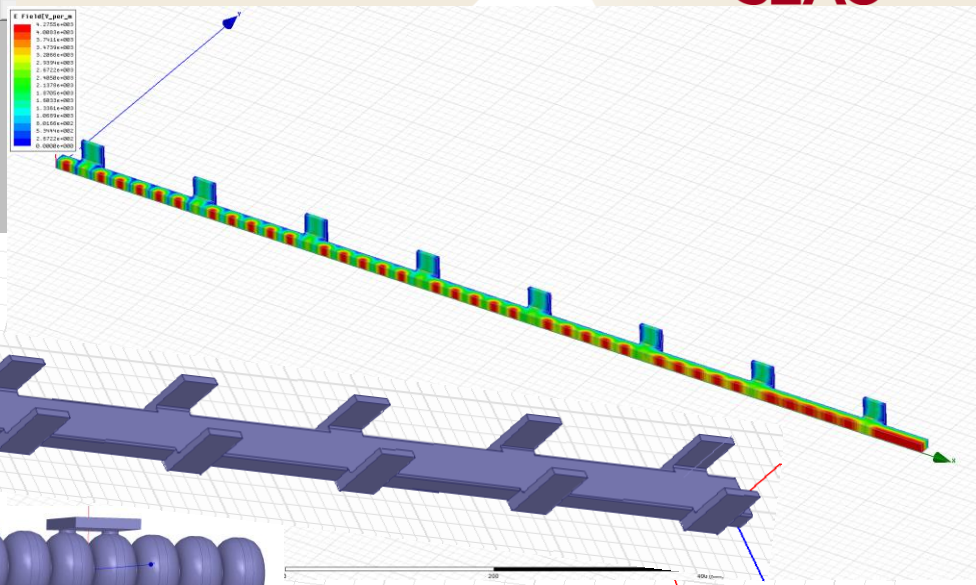

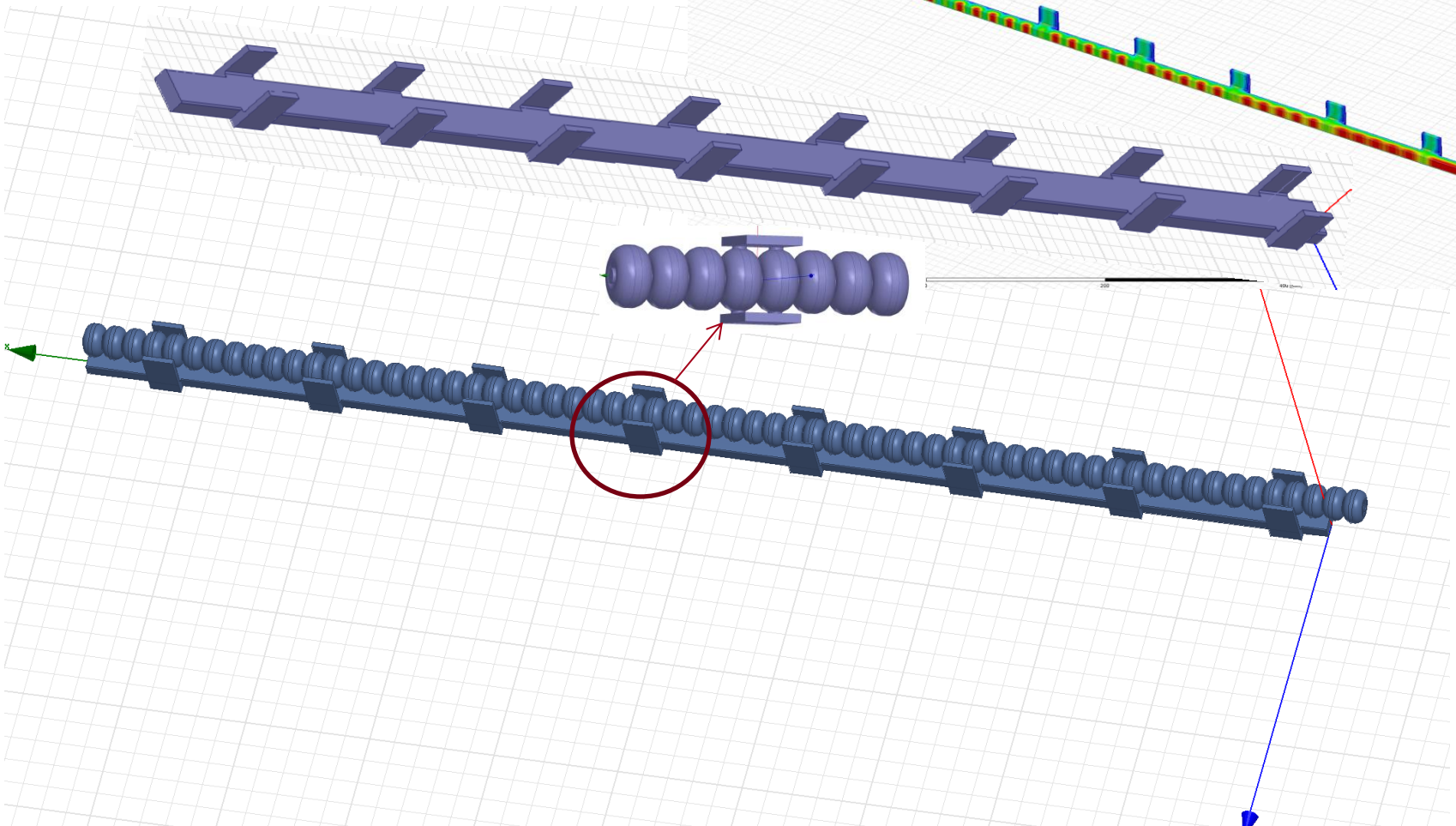

With Waveguide Loss (Wave guide losses do not disturb the field distribution)

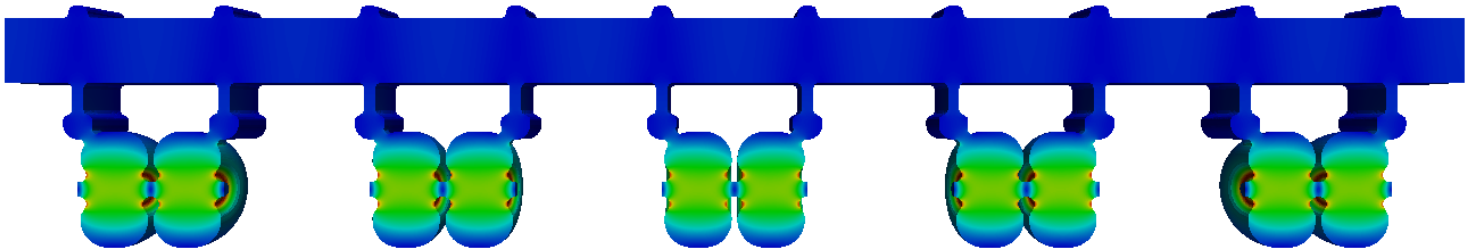

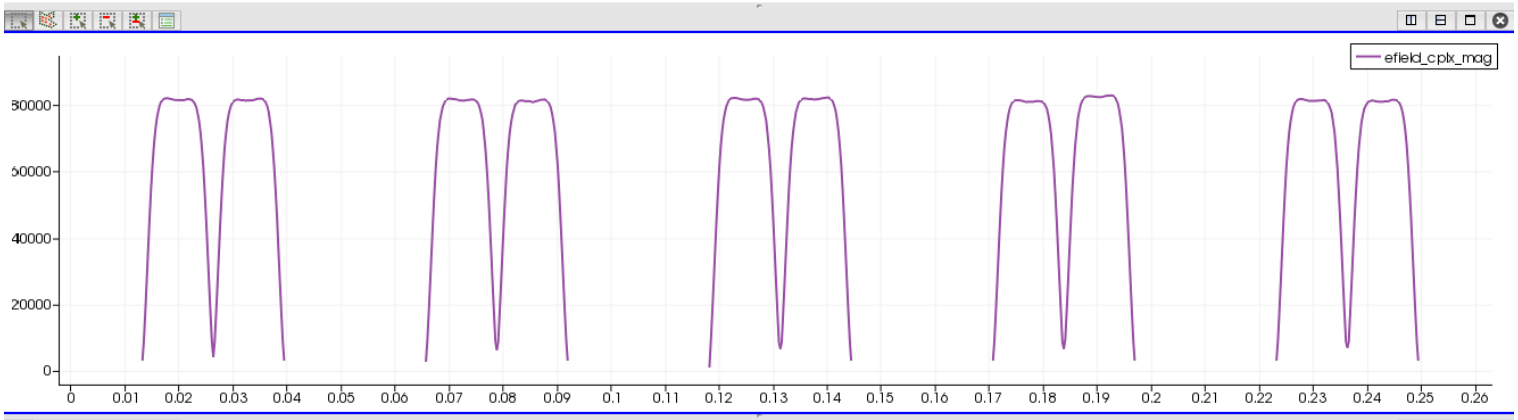

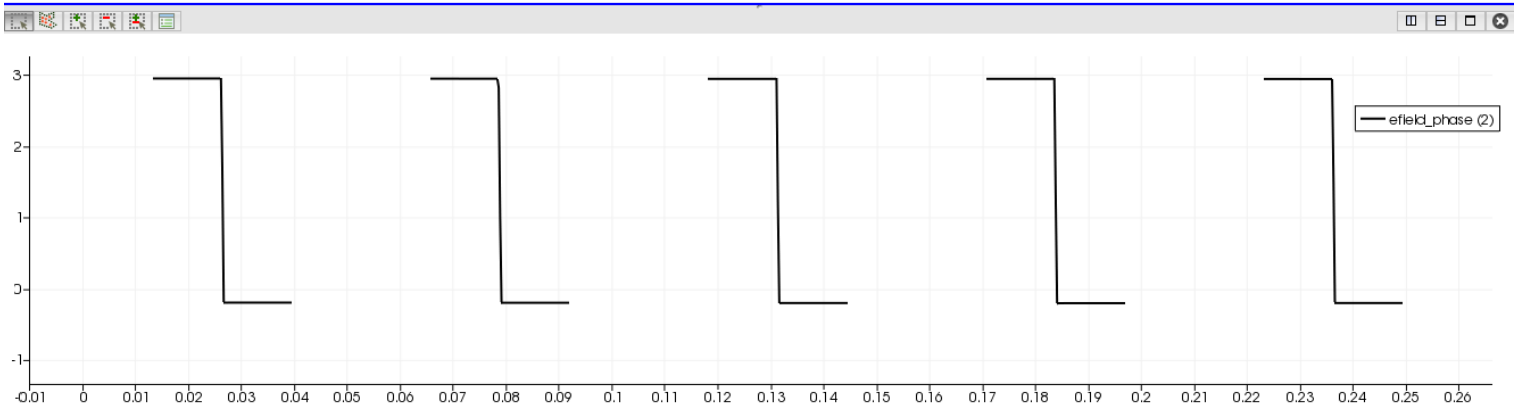

E Field of a 20-cavity Section

Shunt Impedance: 155.5 Mohm/m

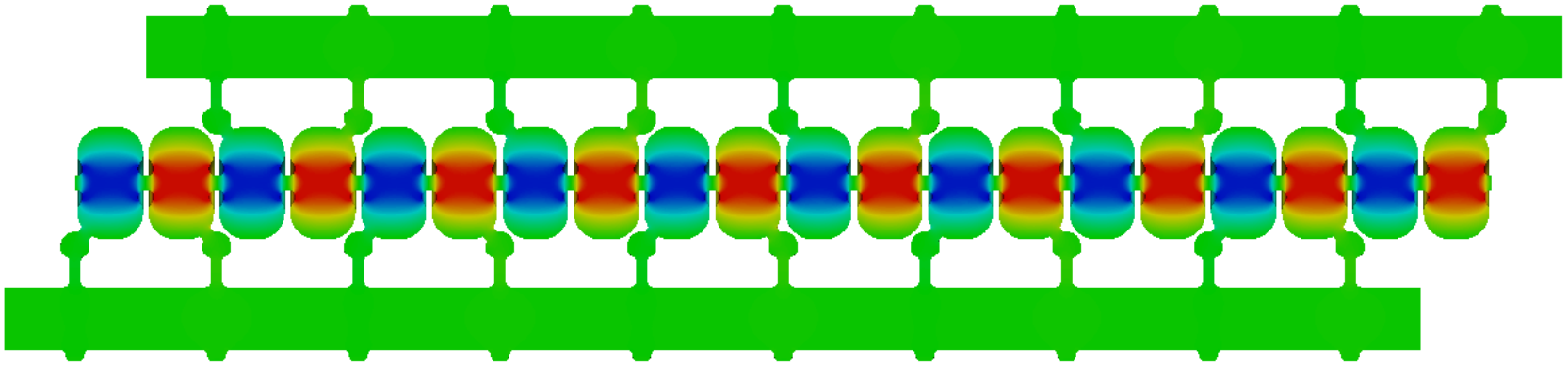

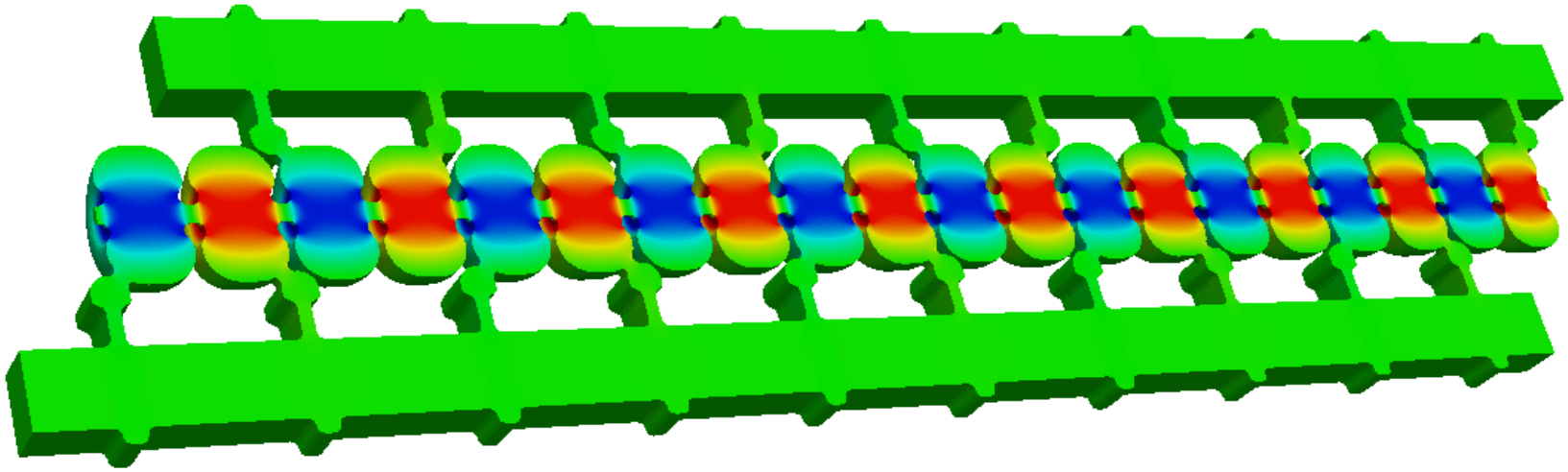

FINAL ACCELERATOR ASSEMBLY CONCEPT

FOUR SECTIONS ARE JOINED TOGETHER TO MAKE FULL ACCELERATOR STRUCTURE

ACCELERATOR ASSEMBLY WITH FOUR SECTIONS OF 20 CELLS EACH (80 CELLS TOTAL)

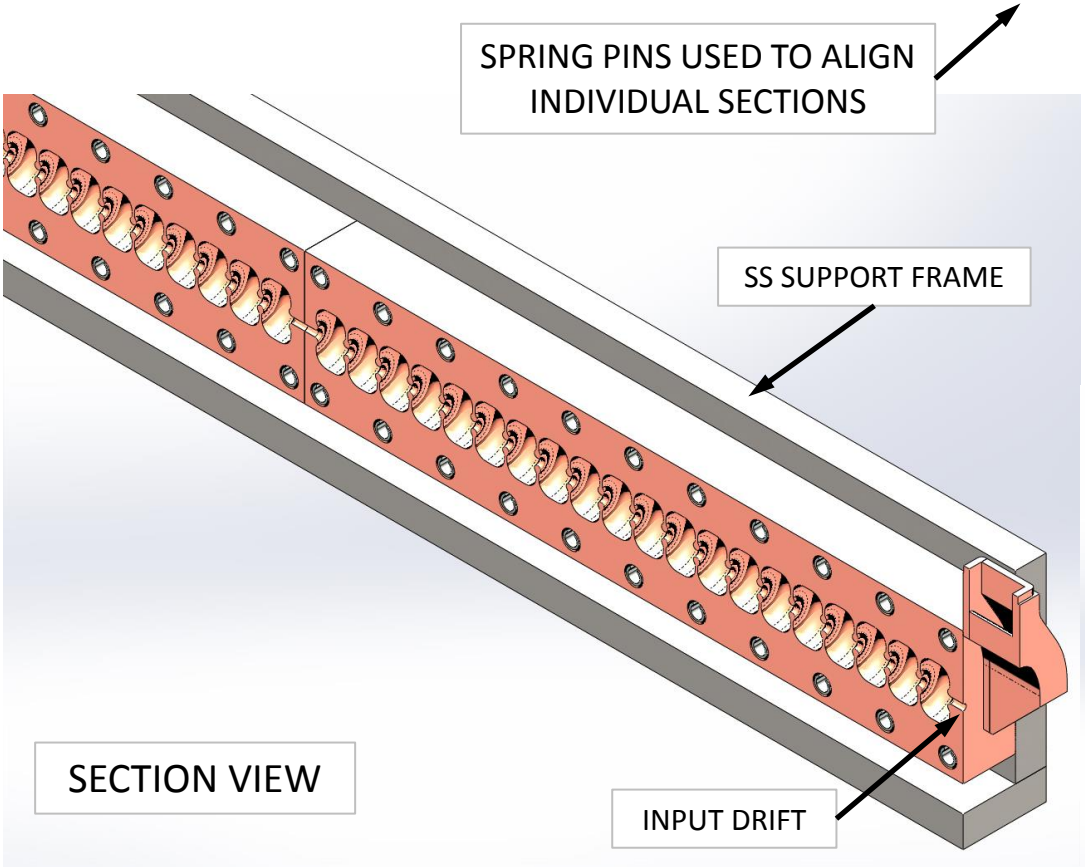

SECTION VIEW

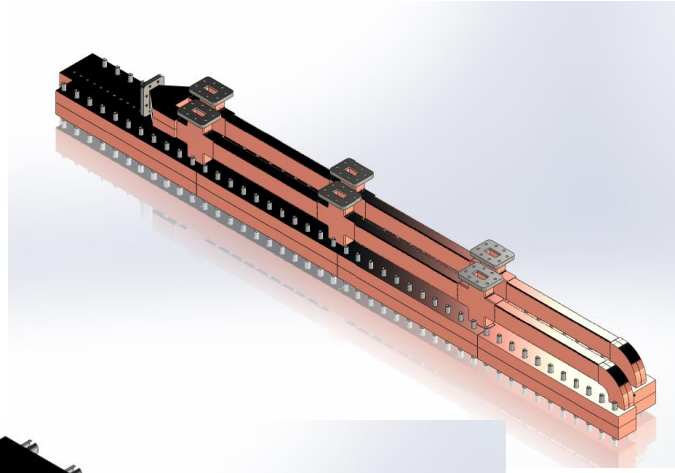

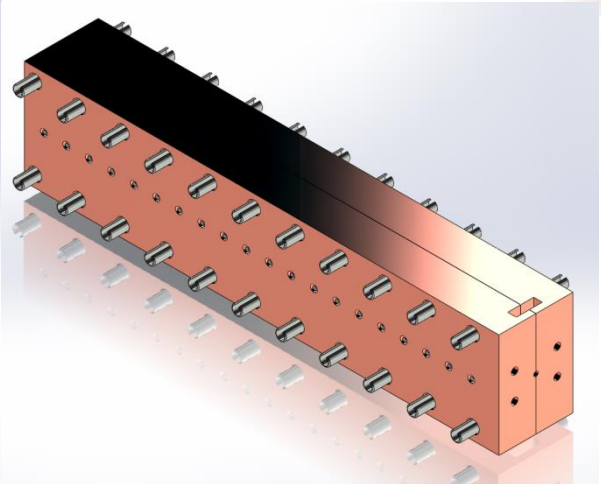

Frequency Choice for highly optimized standing wave structure with distributed feeding

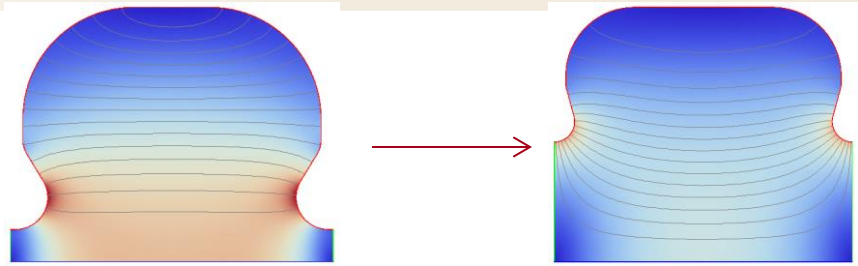

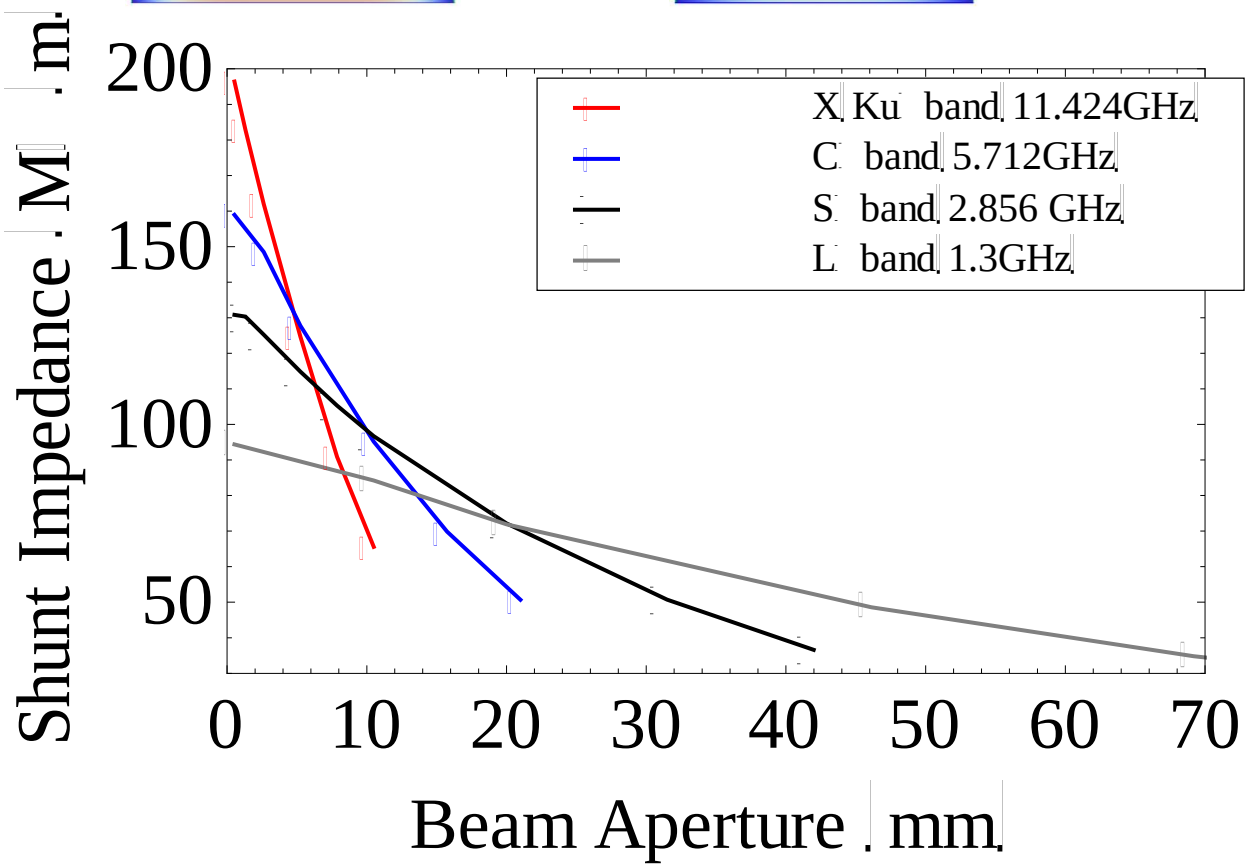

ACCELERATOR THERMAL ANALYSIS

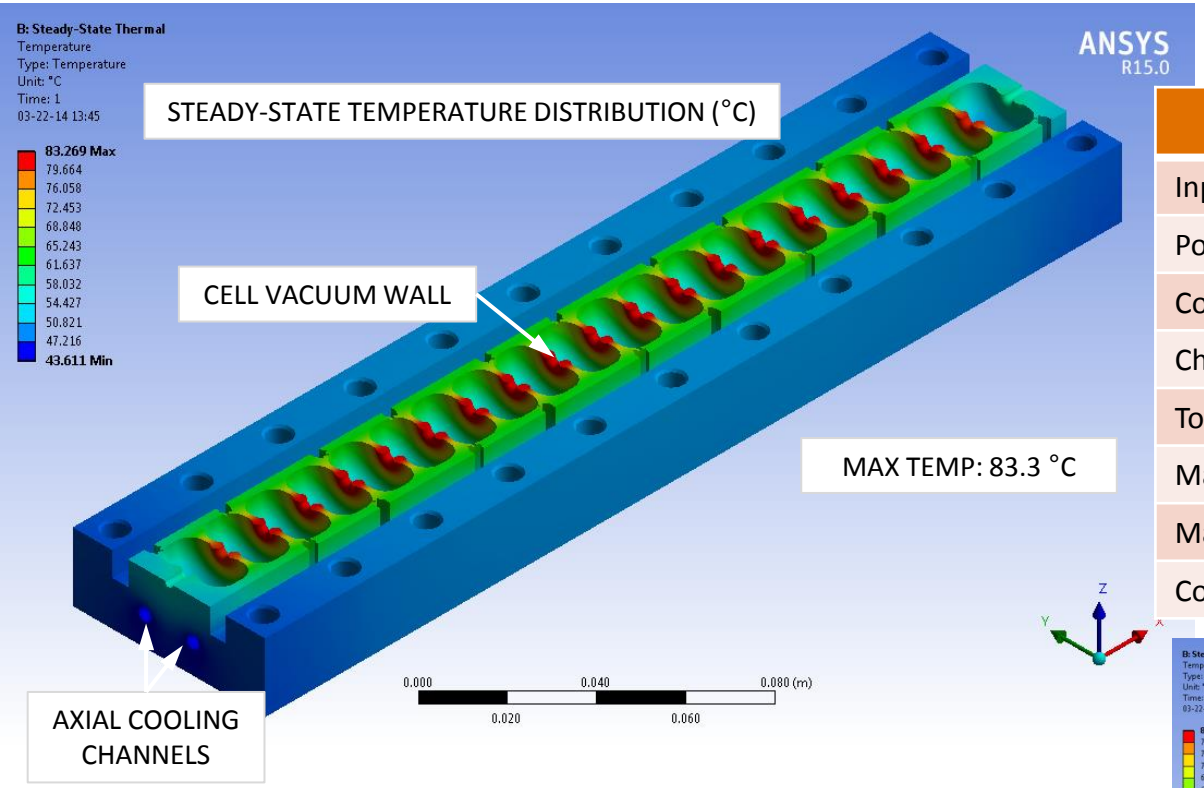

Parameter	Value
Input Power (kW)	4.375
Power Density (W/cm^2)	36
Coolant Inlet Temp (°C)	30
Channel Diameter (in)	0.156
Total Flow Rate (Gal/Min)	3
Max. Vacuum Wall Temp. (°C)	83.3
Max. Wet Wall Temp. (°C)	51.7
Coolant Temp. Rise (°C)	11.1

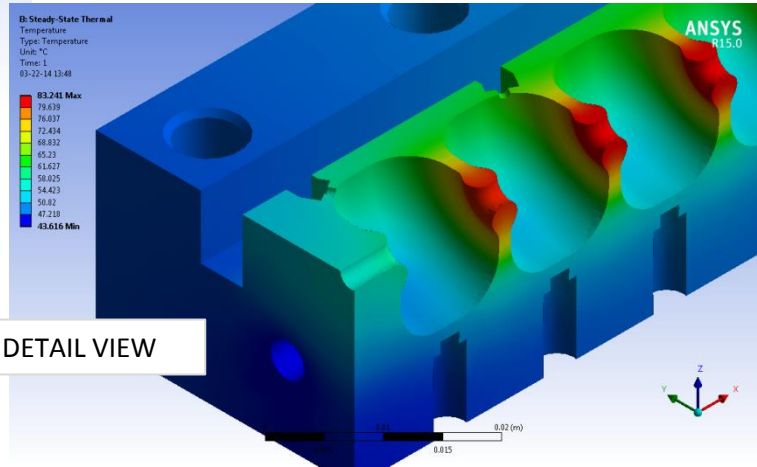

ACCELERATOR STRUCTURE ABLE TO DISSIPATE AVERAGE POWER OF 35 kW (10 MeV, 5 μs, 10kHz)

First cold test of the new structure

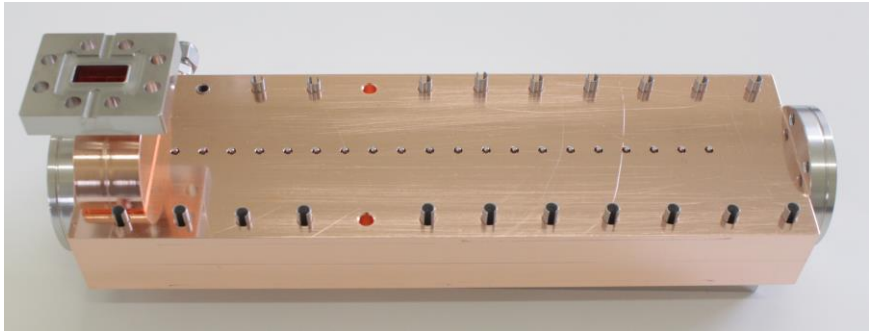

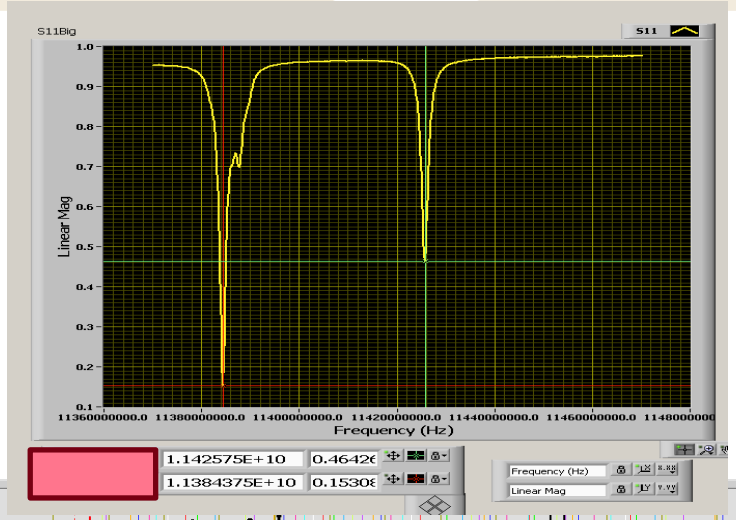

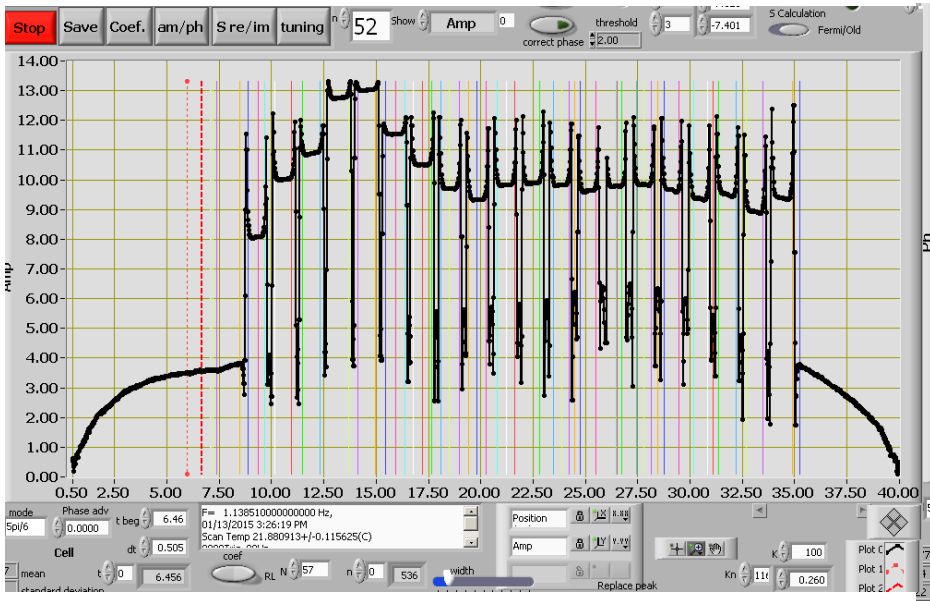

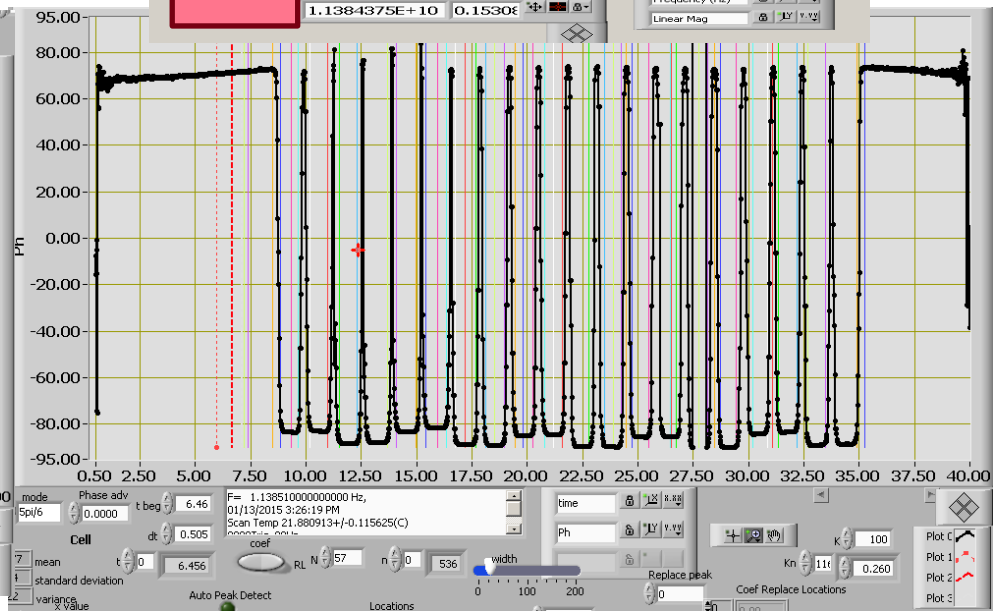

Multi-Frequency Acceleration

- This has been suggested before but with harmonically related frequencies.
- If one insist on harmonically related frequencies, the efficiency of the structure is degraded from that of a single frequency accelerator.
- For a single bunch operation one might be able to get away with frequencies that simply have a common sub-harmonic.

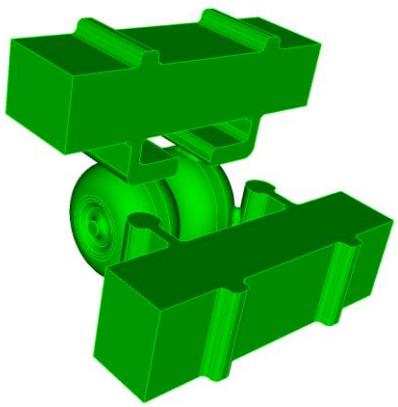

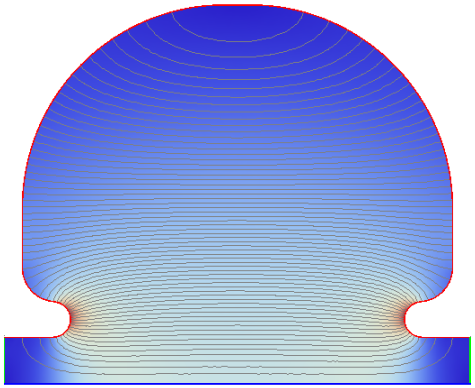

=11.424 GHz
Rs=181 MΩ/m

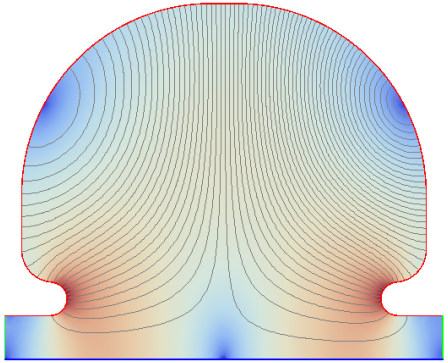

f=18.309 GHz
Rs=63 MΩ/m

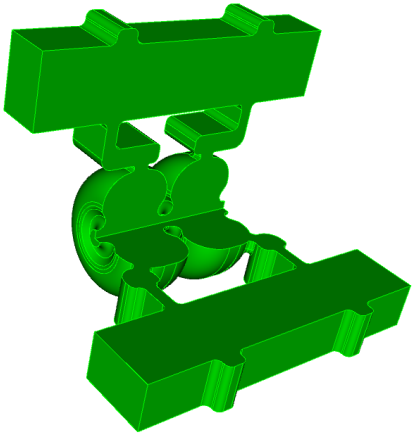

Common sub-harmonic is 300 MHz

Structure has total Shunt Impedance is 244 MΩ/m. We hope to achieve~ 300 MV/m gradient at room temperature.

Two Mode Structure

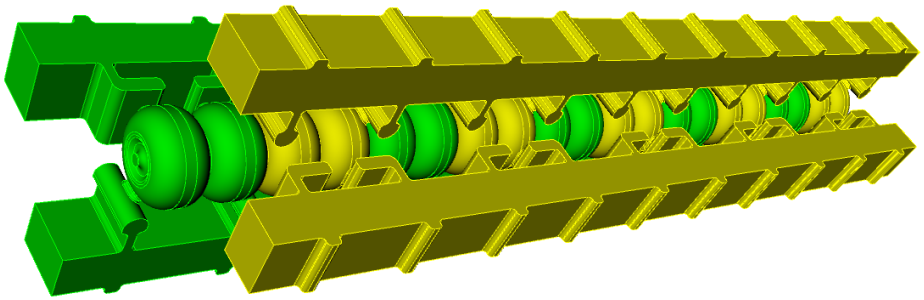

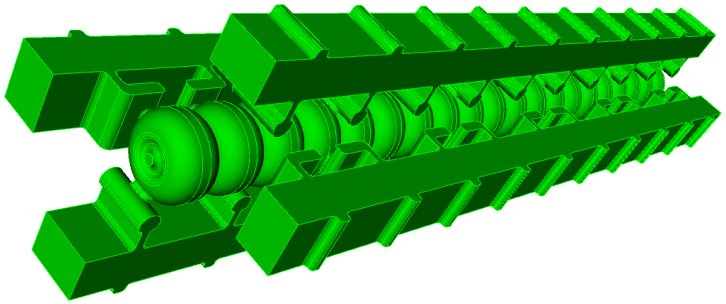

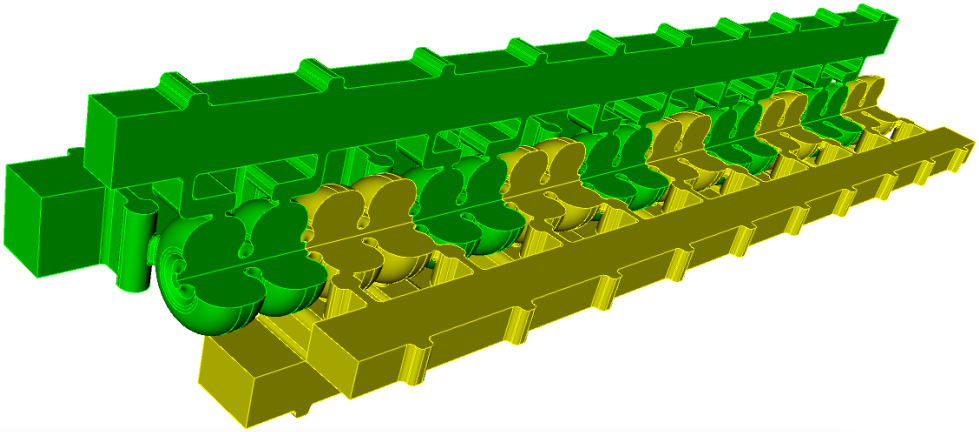

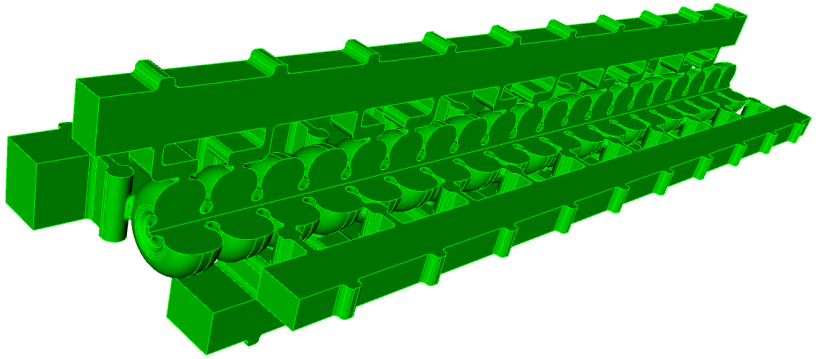

100 GHz copper and stainless steel accelerating structures, as received from vendor

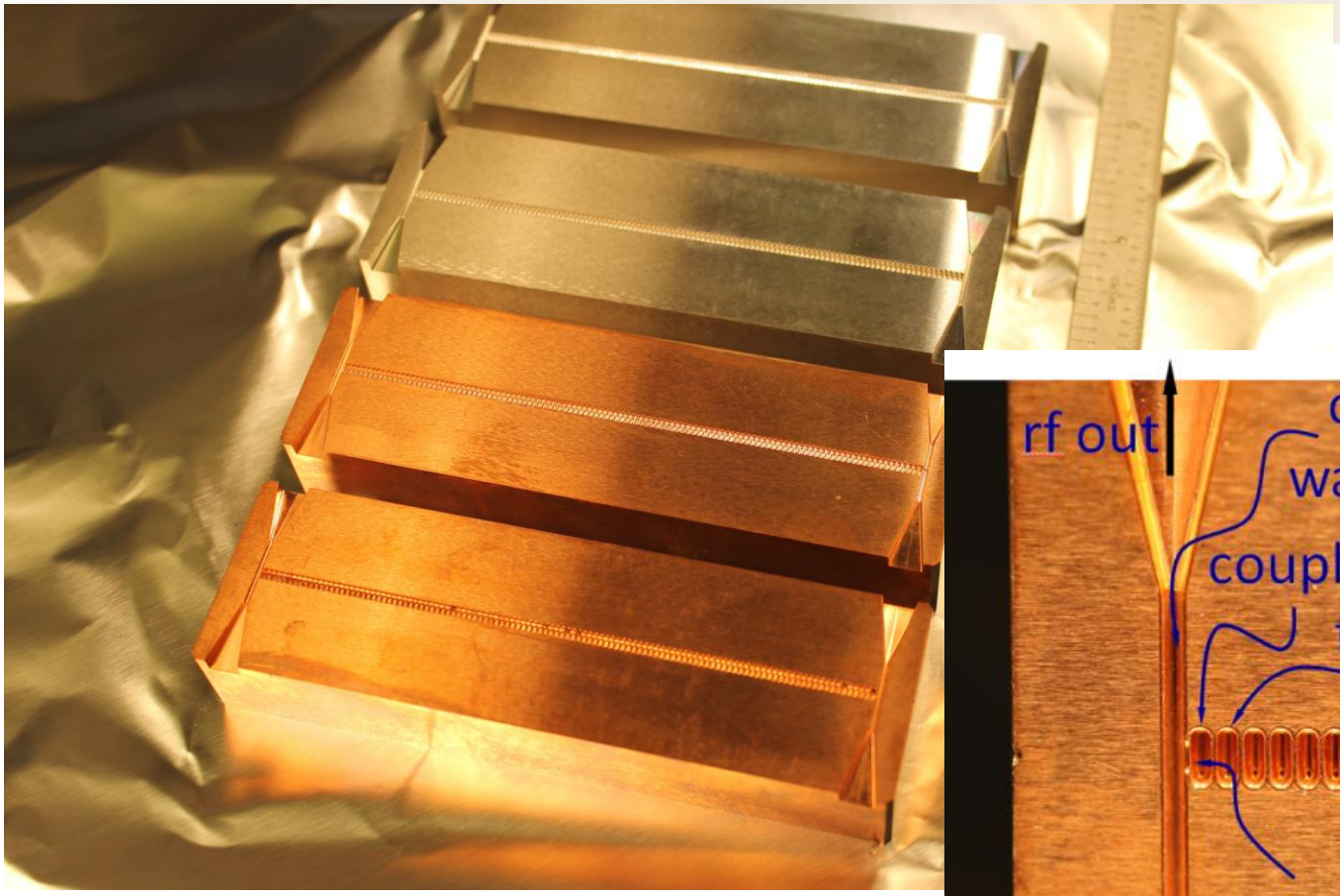

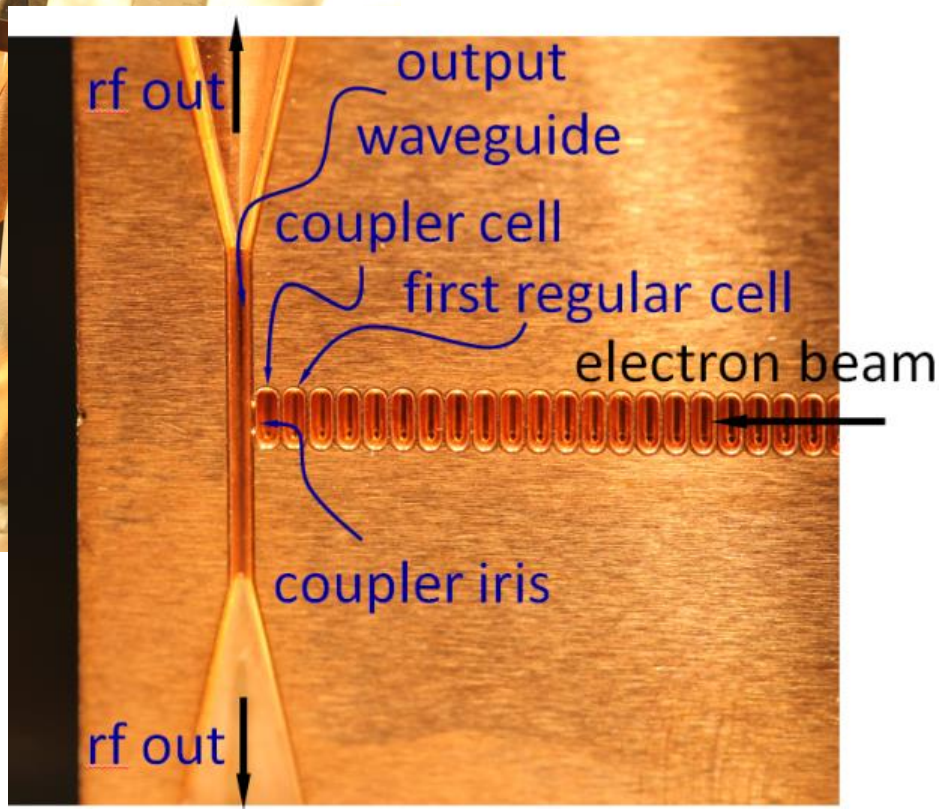

Experimental Setup of E204

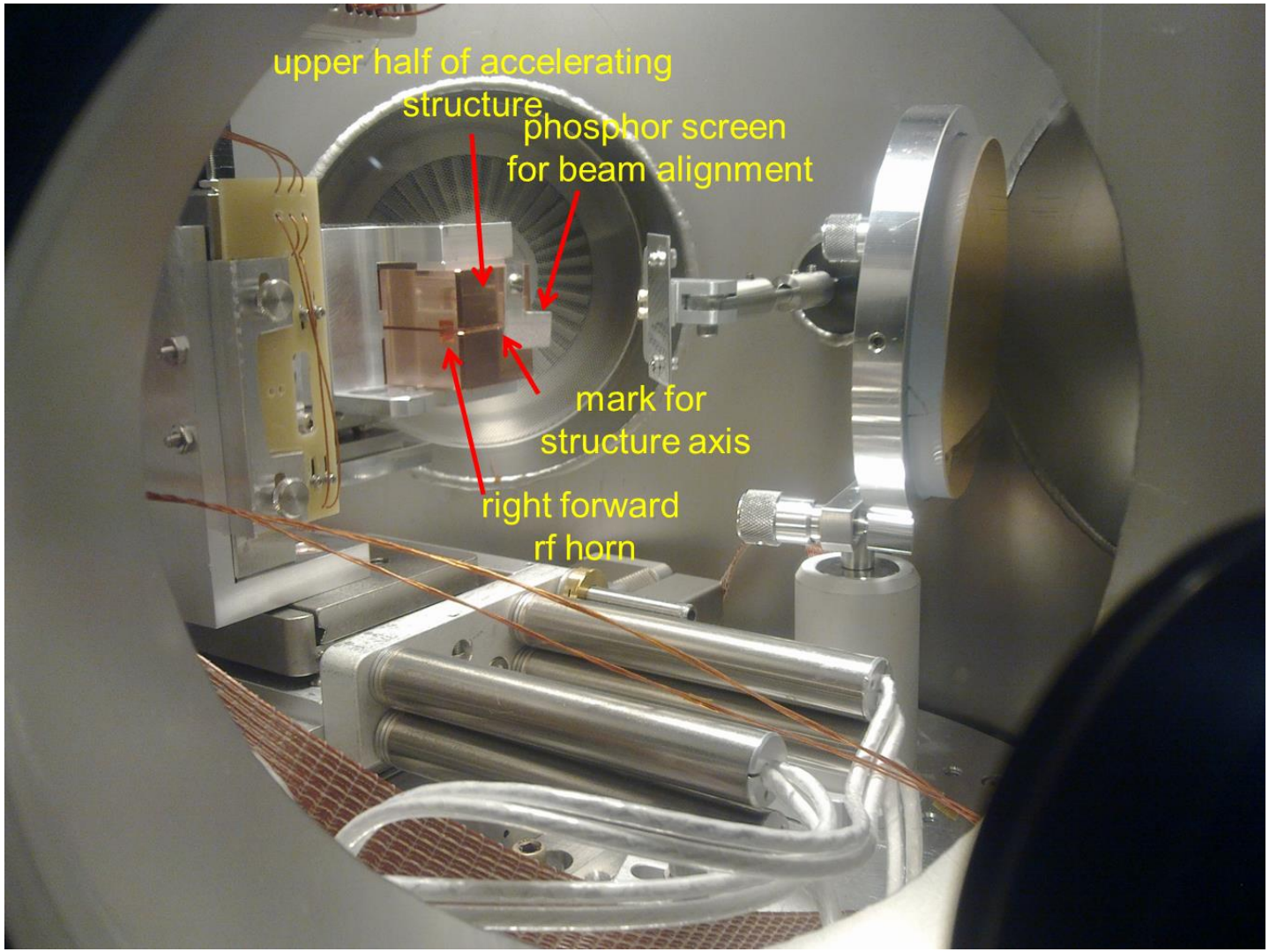

Signal measurements

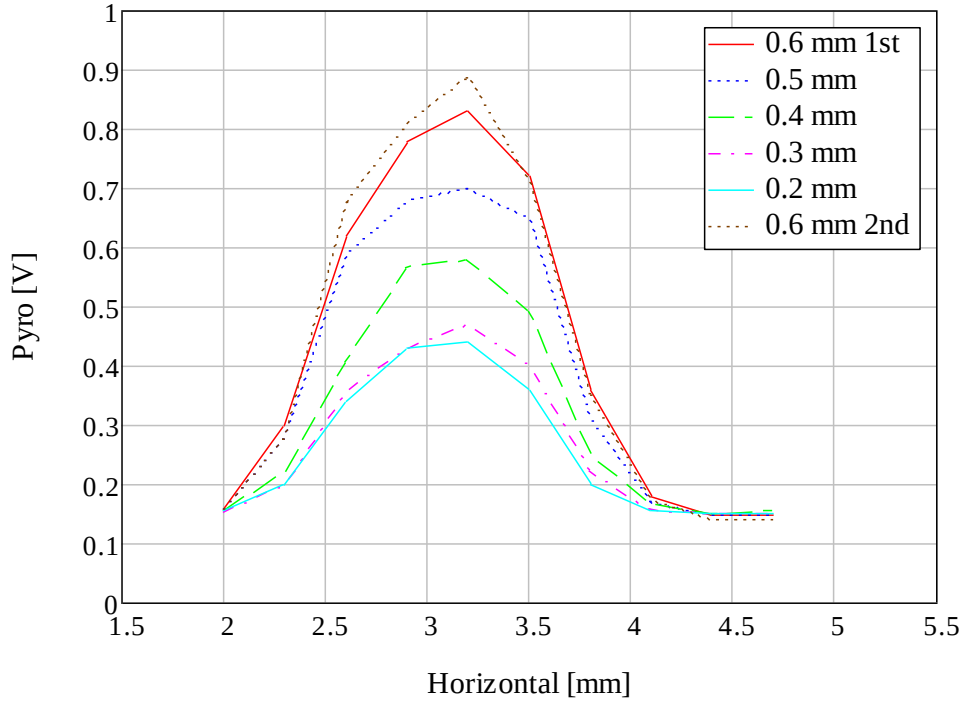

Pyro signal vs. horizontal structure position for different gaps

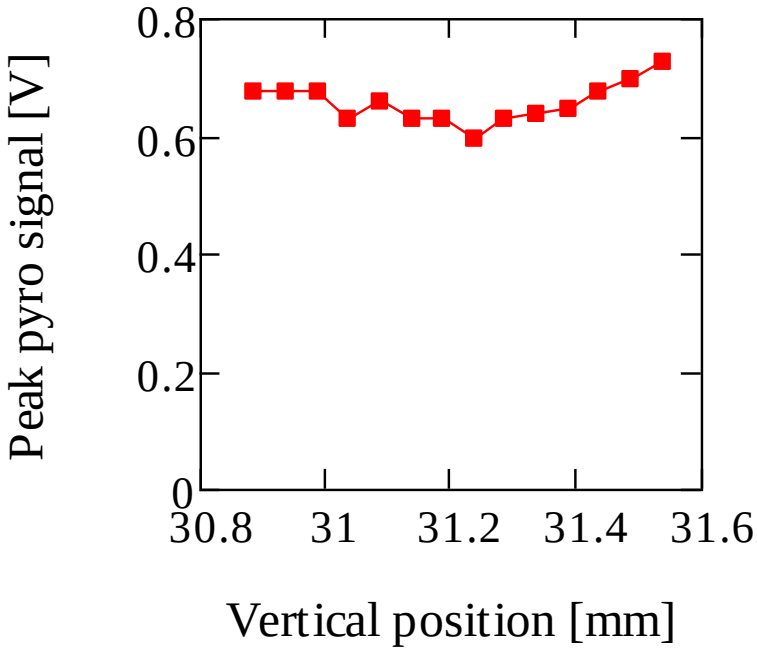

Peak pyro signal (@3.2mm horizontal position) vs. Vertical structure position

Structure autopsy after being subjected to fields greater than 11 GV/m

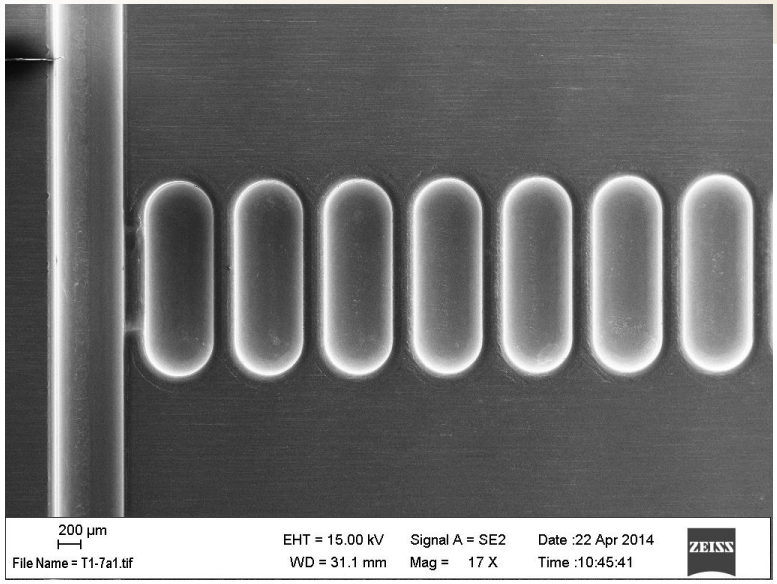

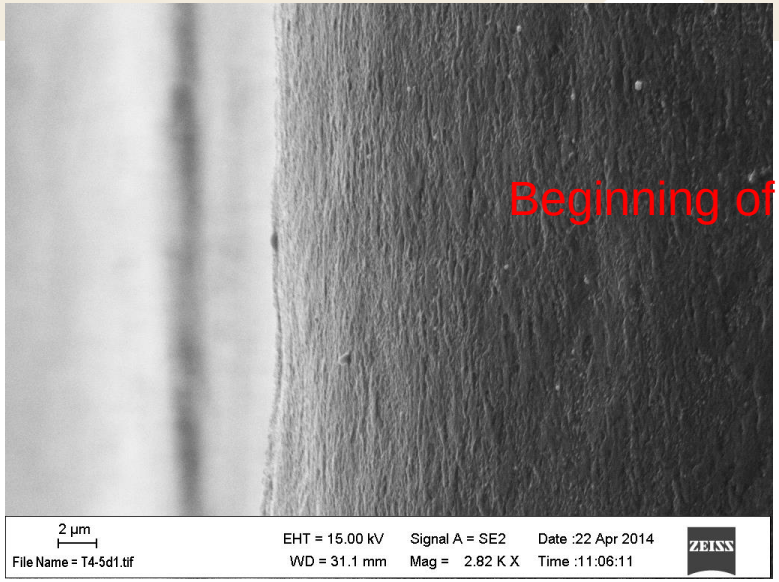

Beginning of the structure

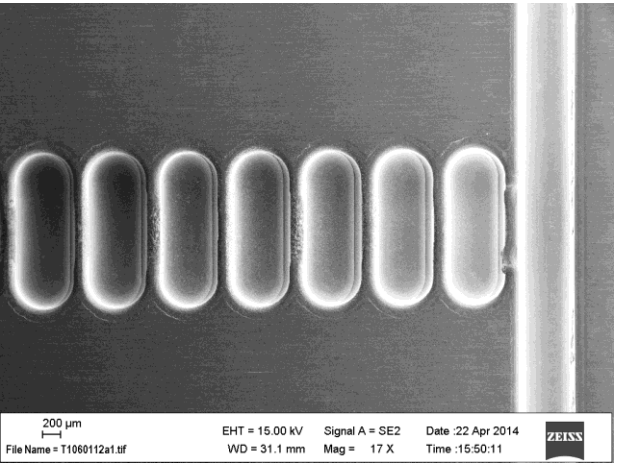

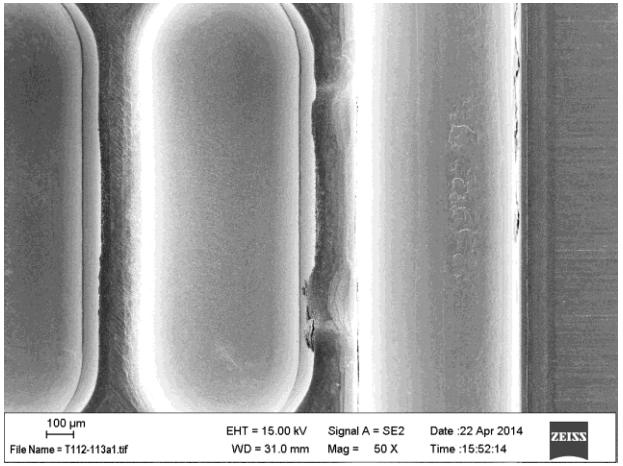

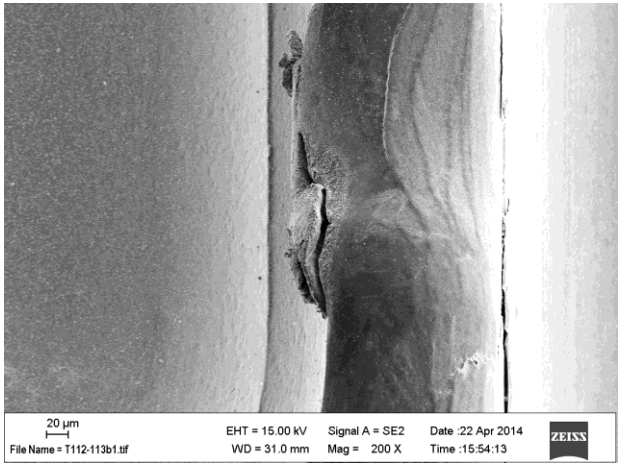

End of the structure

Next Step: The Advanced High Frequency Acceleration Program Focuses on Source Efficiency and Frequency Reach

SLAC

Basic physics of Microwave Acceleration leads to~
0.2 GV/m
T_f ~100 ns

Applications of HG Research and Technology

- High gradient
- Efficiency
- Build-ability

Higher Gradient requires shorter filling times; i.e., higher frequency
FACET Experiment, 3 ns pulse
1 GV/m @116 GHz

- Sources
- Novel energy recovery & short pulse lengths

Research on GV/m in metallic structures at mm waves to THz regiem

- Generate power @ mmW –THz wavelengths

RF source & accelerator science in 0.1 – 1 THz spectral range

1-10 GV/m possible @ mmW-THz

- Ultra high gradient accelerators
- Novel Wakefied accelerators

High Gradient accelerator structures demonstrated, but RF sources are currently too inefficient, too expensive, or unavailable at the higher frequencies. So…

Movie to animate the Unified 3db Coupler/Mode Convertor/Polarizer

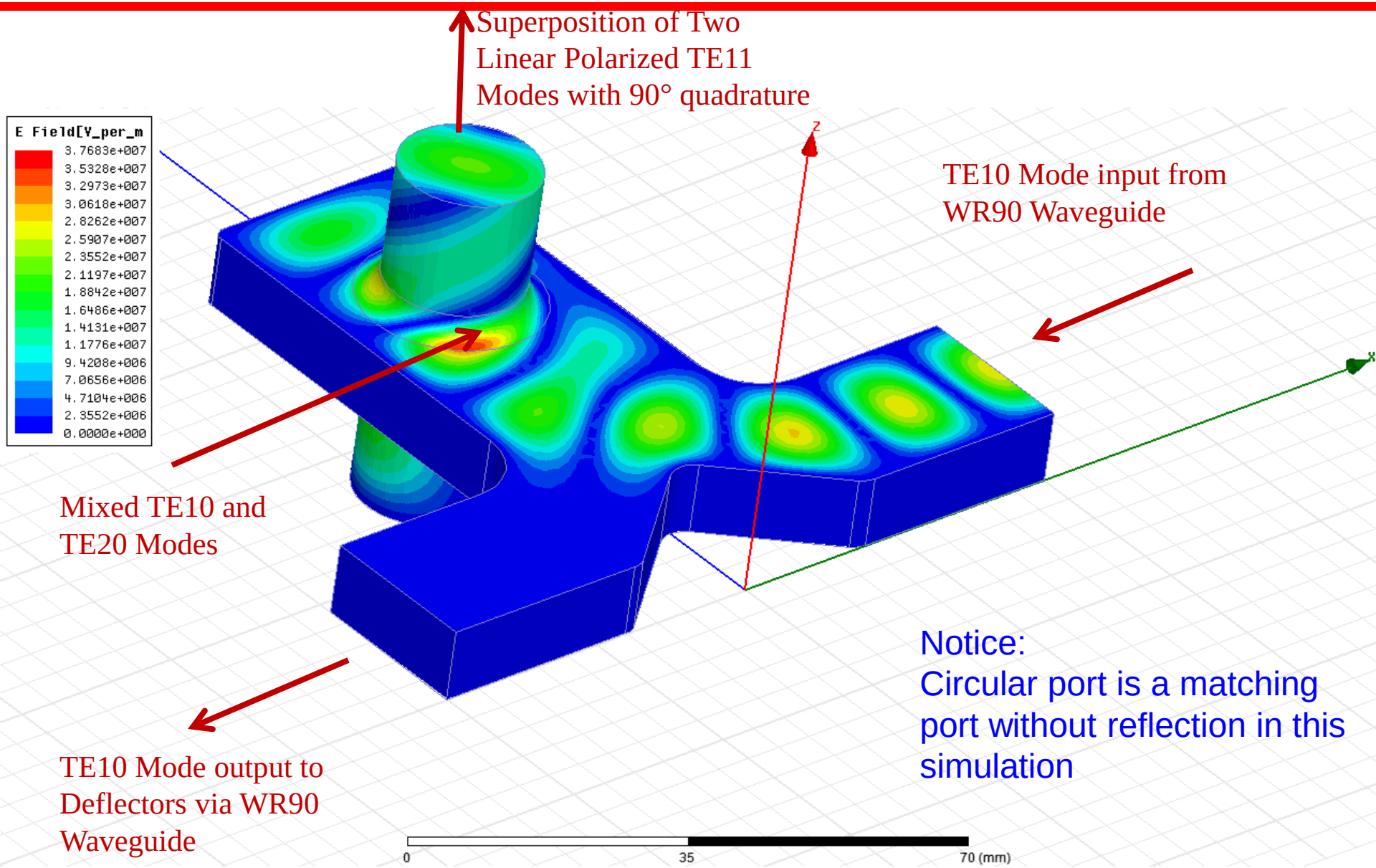

Notice:
Circular port is a matching port without reflection in this simulation

Movie to animate the SLED System

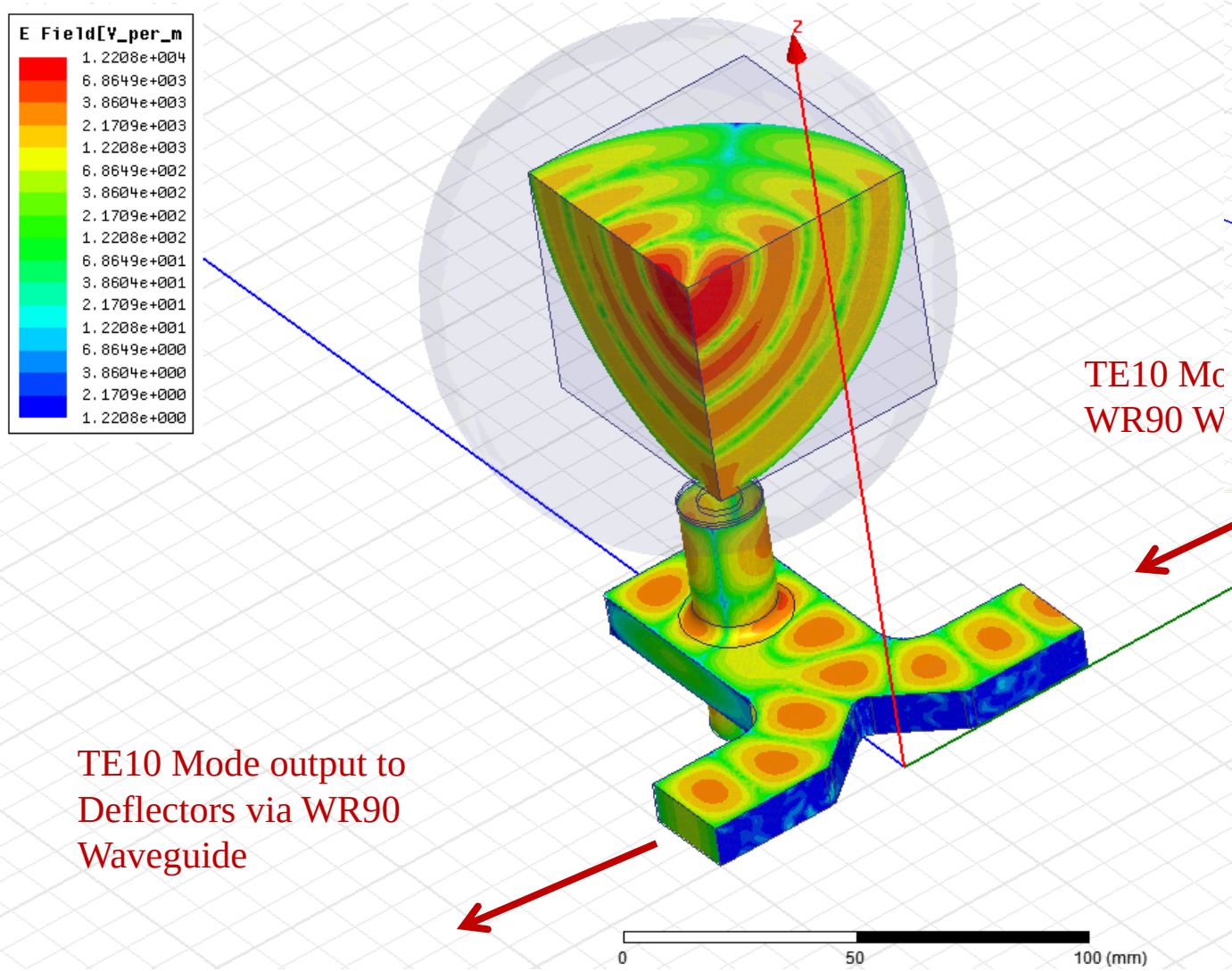

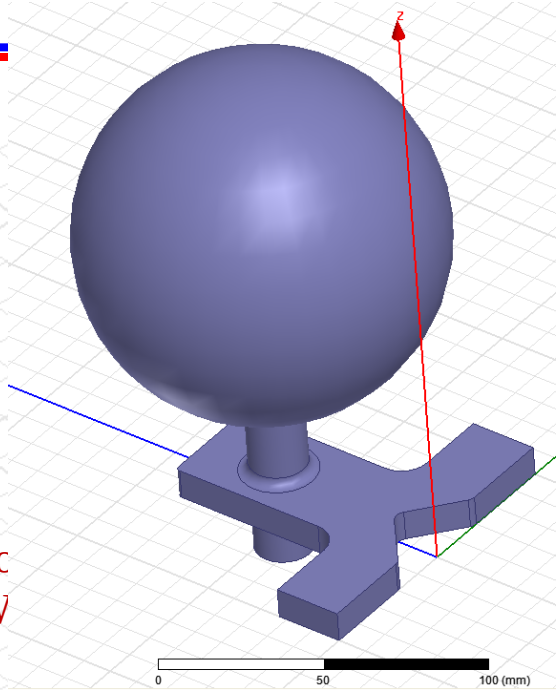

TE10 Mc
WR90 W

TE10 Mode output to Deflectors via WR90 Waveguide

Multi-beam klystron development

MBK 16

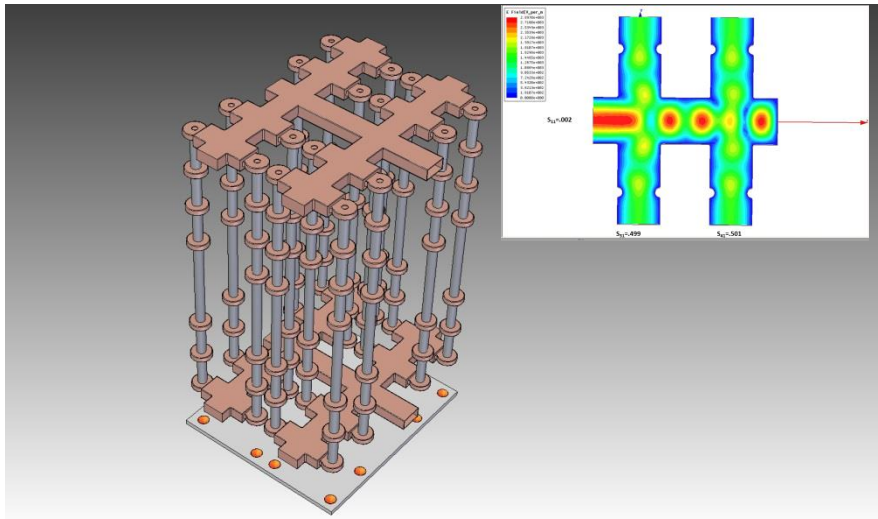

MBK64

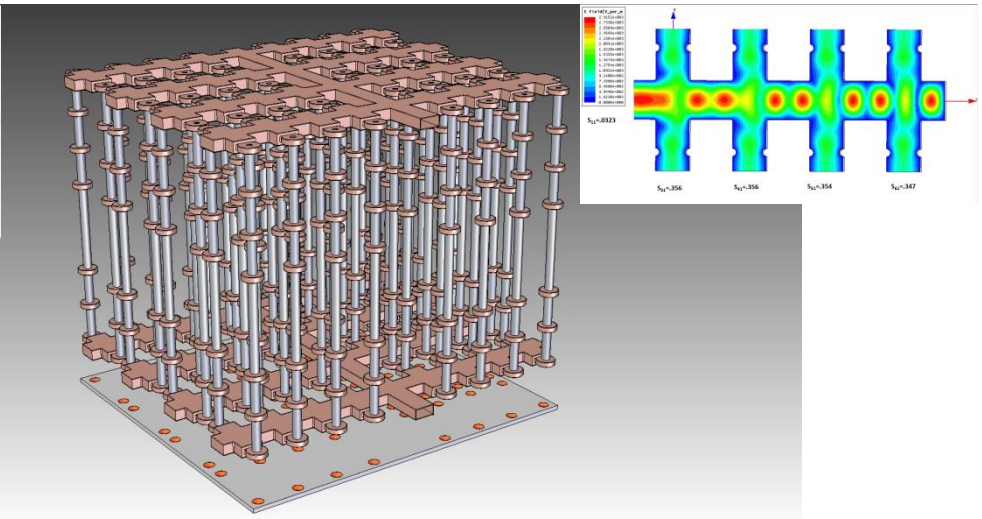

- Multi-beam system with highly overmoded structure.
- Based on research done for the delay line distributed system pulse compression scheme developed for the NLC [S.G. Tantawi et. al., " Multimoded rf delay line distribution system for the Next Linear Collider," Phys. Rev. ST Accel. Beams 5, 032001 (2002)]
- Most compact possible configuration:
  - The number of beams is $(2N)^2$; where N is the division ratio for single splitter
  - Output degrades as $(1-M/(2N)^2)^2$ where M is the number of Off beams
- No electromagnets, focusing is done with Permanent Periodic Magnets (PPM)
  - Low voltage:
  - simplified gun structure and
  - no oil;
  - efficient inexpensive modulator; and
  - the possibility of using gridded cathodes

Work done in collaboration with J. Neilson's group at RFARD

Distribution Structure and mechanical design

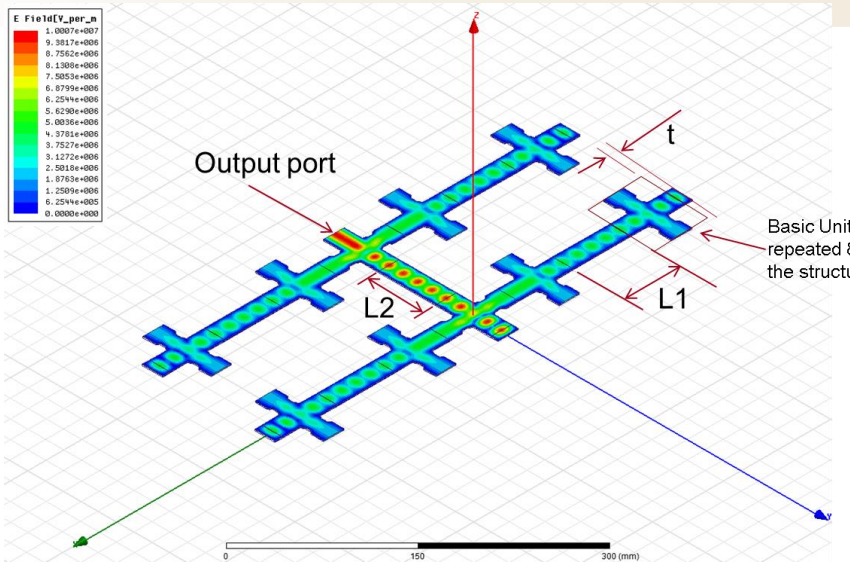

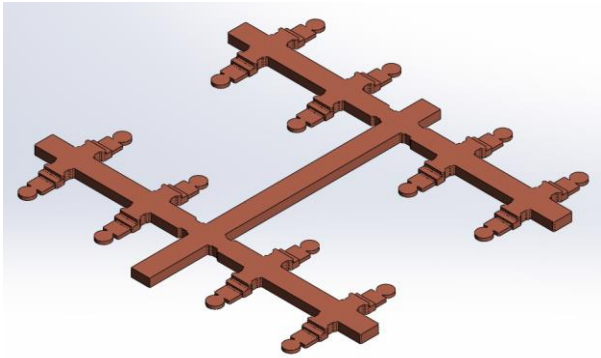

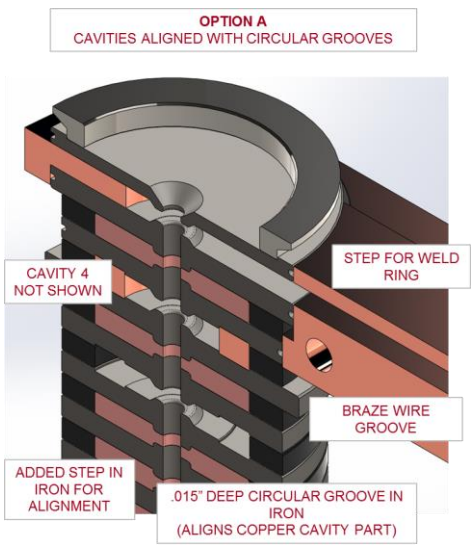

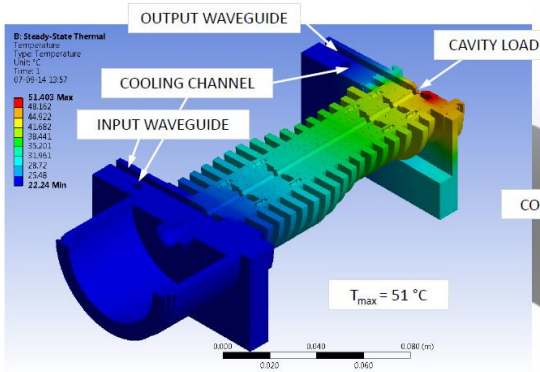

2014-07-11

TEMPERATURE (°C)
WITH CAVITY LOADING ONLY

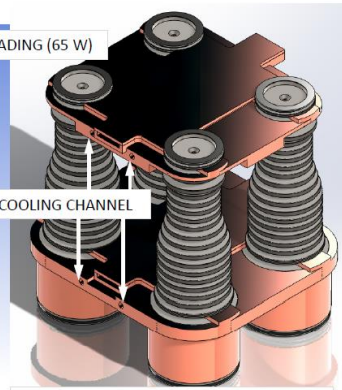

NEW BODY DESIGN
COOLING AROUND FEED WAVEGUIDES

Much of the sub-booster gun assembly could be used if desired.

WSBK Collector

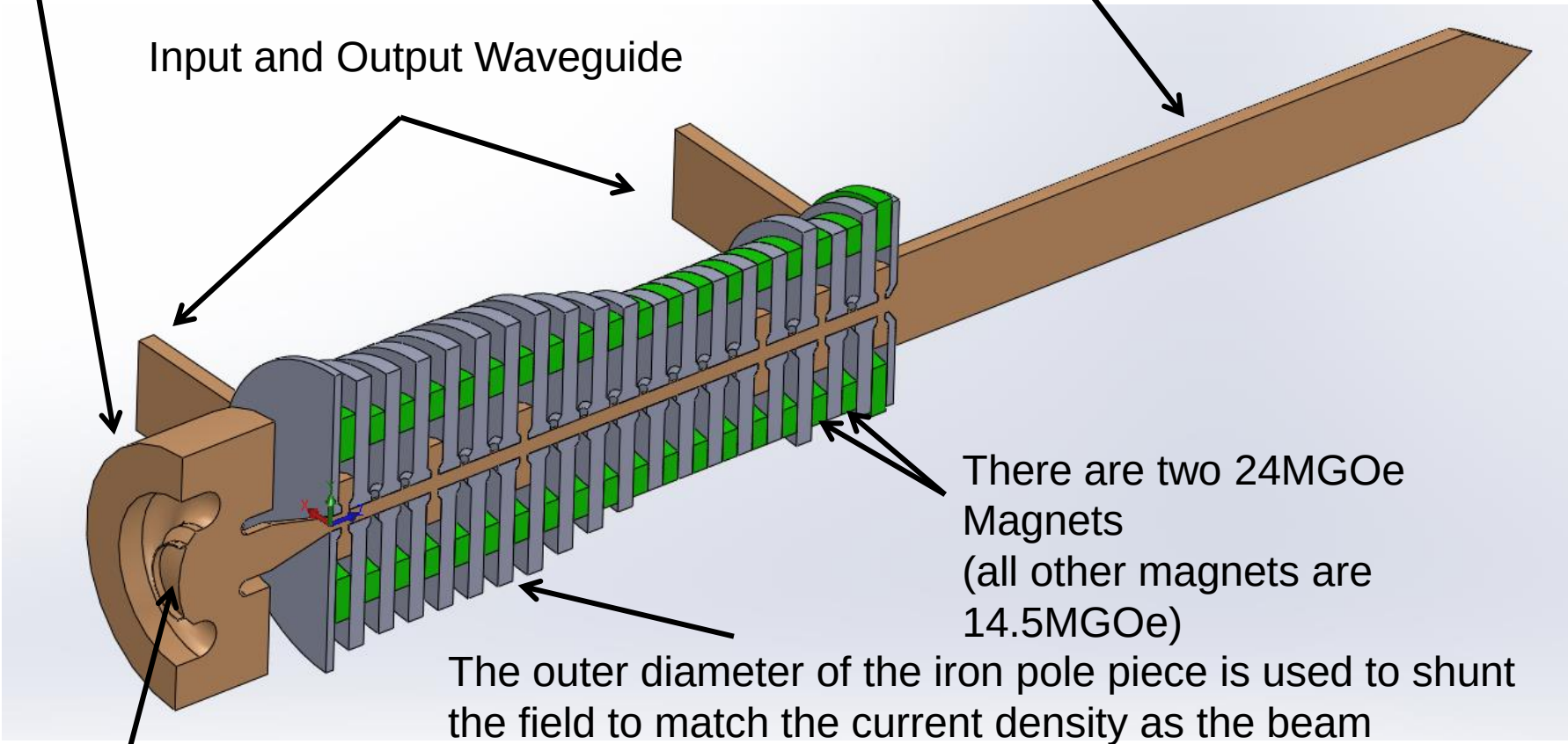

There are two 24MGOe Magnets
(all other magnets are 14.5MGOe)

The outer diameter of the iron pole piece is used to shunt the field to match the current density as the beam bunches.

0.6” Cathode from Spectra-Mat $1.2k-$2k depending on specifications

The cathode to collector tip distance is ~12”
(the maximum diameter is ~2.5”)

X- Band Multi-Beam Klystron Design Specifications

Parameter	Design Goal
Beam Voltage (kV)	60
Frequency (GHz)	11.424
Output Power (kW)	5MW
Beamlets	16
Beam Focusing	Periodic Permanent Magnet (PPM)
Efficiency (%)	60+
Cathode Loading (A/cm^2)	< 10

Multi-dimensional RF sources
Cylindrical diode

Massimo Dal Forno, 30 April 2014

U.S. DEPARTMENT OF ENERGY
Office of Science

SLAC NATIONAL ACCELERATOR LABORATORY

Multi-dimensional RF sources (Original Idea by R. Ruth and S. Tantawi)

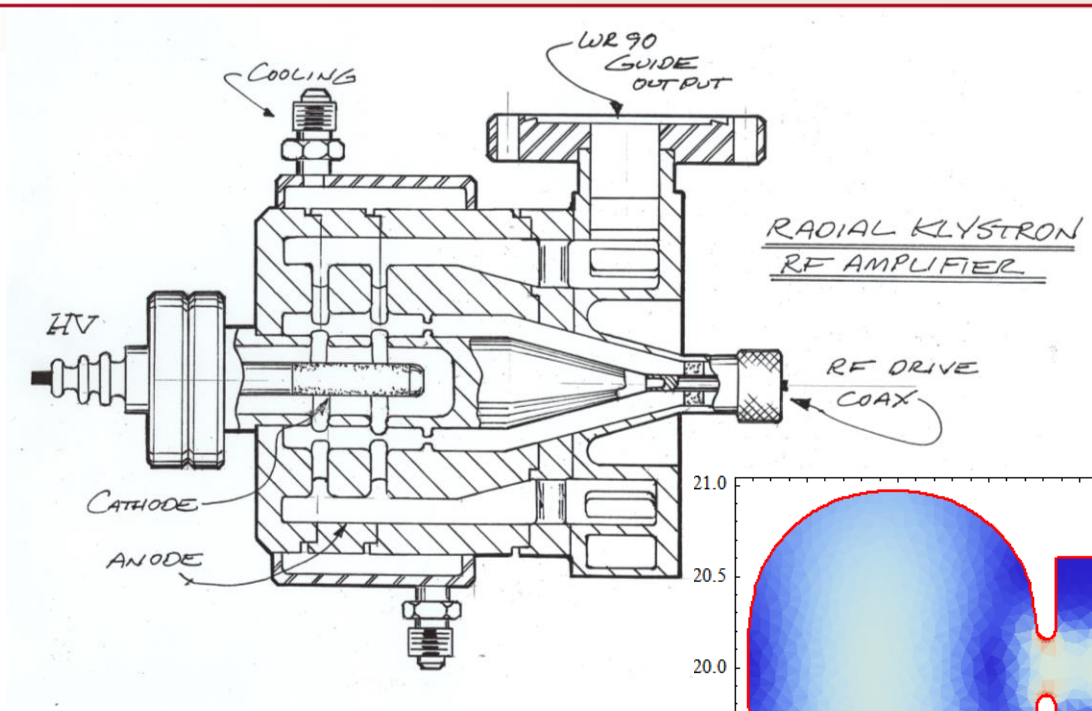

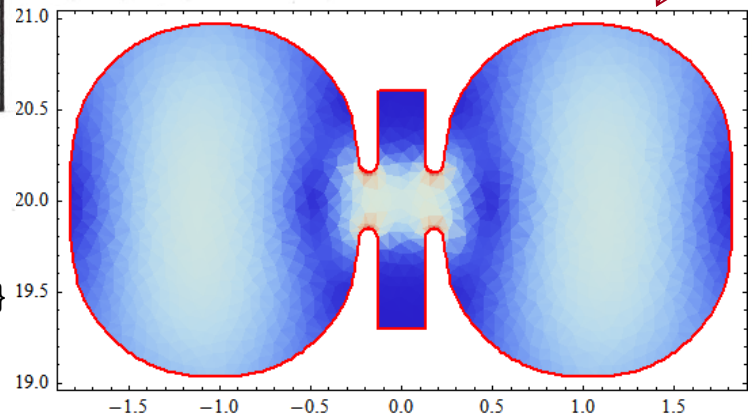

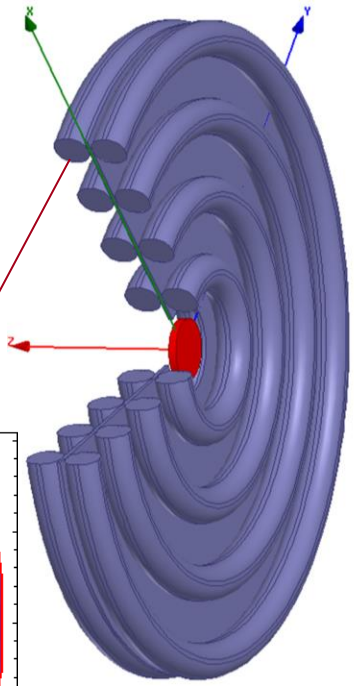

{U, Loss, Qo} = {39.4784 nJ, 0.262144, 10809.5}

- The beam naturally expands under space charge forces and hence magnetic focusing is not required
- Both bunching the beam and extracting power from it would be simpler and the device can have high current and low voltage.
- Ideally the beam could be bunched from the cathode and the power extracted in an overmoded cavity.
- Implementation of these devices requires the development of specialized codes to design and optimize the performance.

Coaxial coupling with the cavities

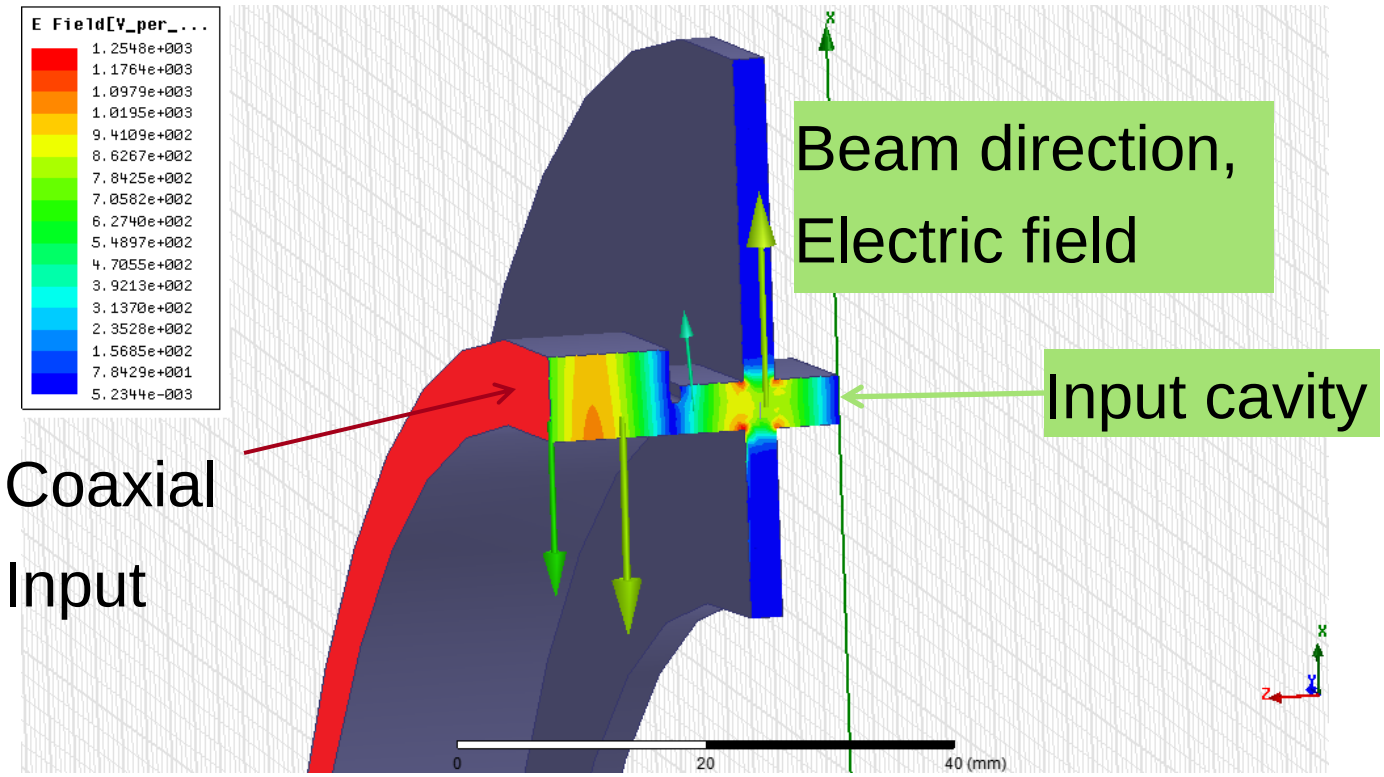

Operating frequency: 11.424 GHz

Child's Law:

$$I_a = \frac{\pi 2\sqrt{2}}{\eta_0} V_0 \left(\frac{L_{eff}}{A}\right)\left(\frac{V_a}{V_0}\right)^{3/2} \frac{1}{d^2}\left[\frac{4}{9} + \frac{16}{45} d\right]$$

Stability test of the modes, gap = 2 mm:

Data:

Q0 = 2500

Va = 30 kV

Ia = 200 A

F = 11.424 GHz

γ = 1.06

v = 0.446 c

Transient time factor:

$$T = \frac{\sin\left(\omega \frac{gap}{v}\right)}{\omega \frac{gap}{v}} = 0.82$$

Stability function:

$$-V \frac{<\delta\gamma|_2>}{E^2} \frac{1}{\gamma - 1} IQ - \omega \frac{U}{E^2}$$

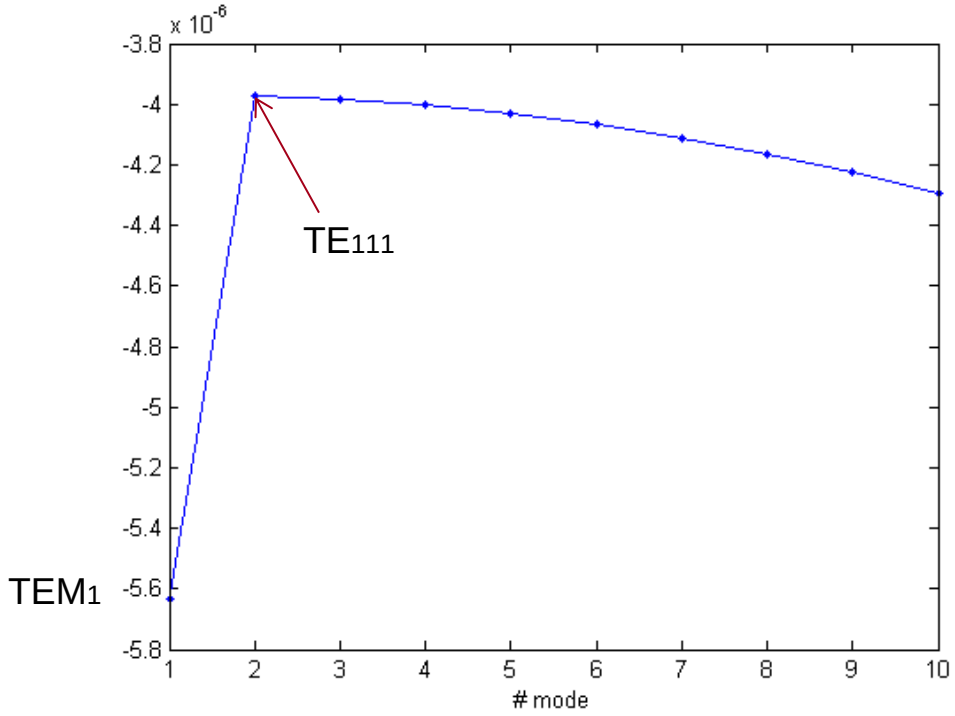

Several Promising New Approaches Have Been Identified for THz generation

THz Generation Concepts

- Gas & quantum cascade lasers
- Solids or plasmas driven by intense fs lasers
- Free electron based sources – Primary focus
- Solid state sources– Secondary focus
- THz photoemitters - Secondary focus

Initial efforts will examine feasibility of alternative approaches with a planned down-selection

CSR-Maser Concept Scales Well to THz Wavelength (300 µm)

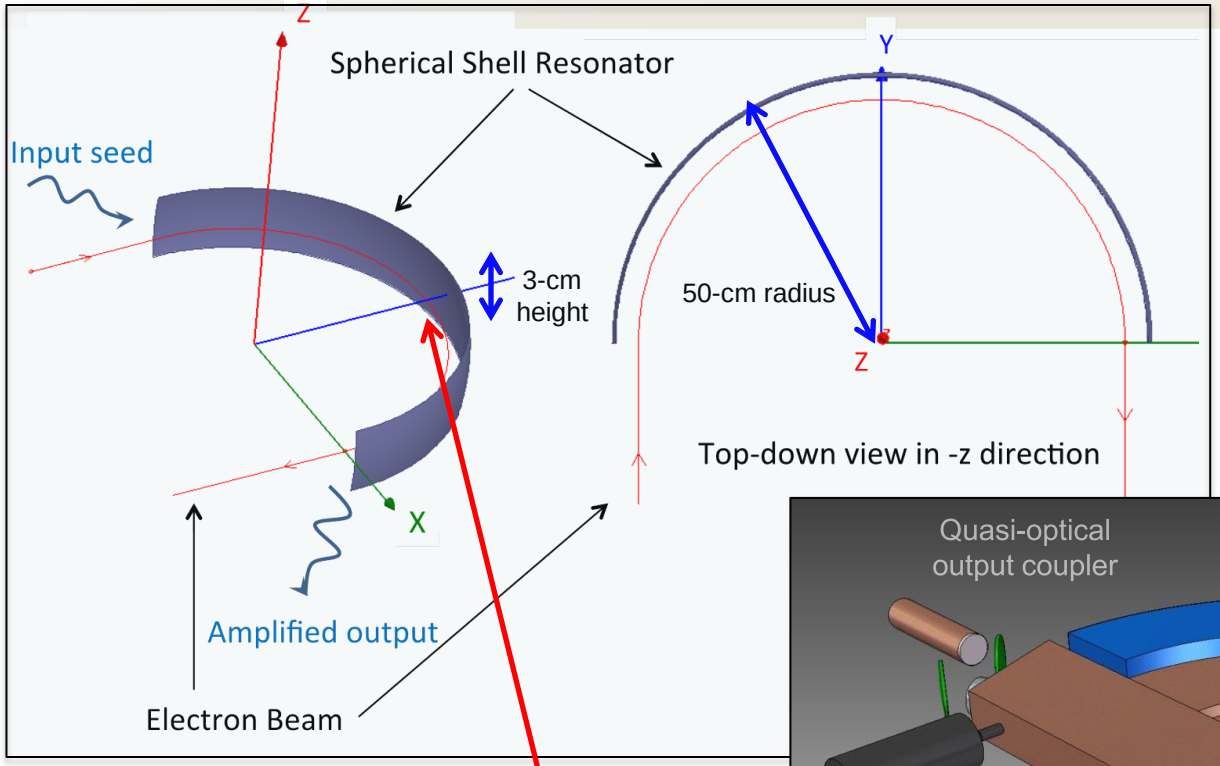

Concept developed by S. Tantawi

Electric field

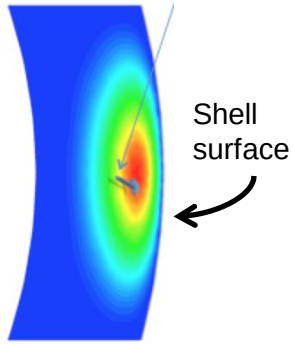

- Bunching with negative mass instability
- 10 MeV beam requires only 700 gauss guiding field
- Can trade off beam voltage, radius, & magnetic field for optimal design

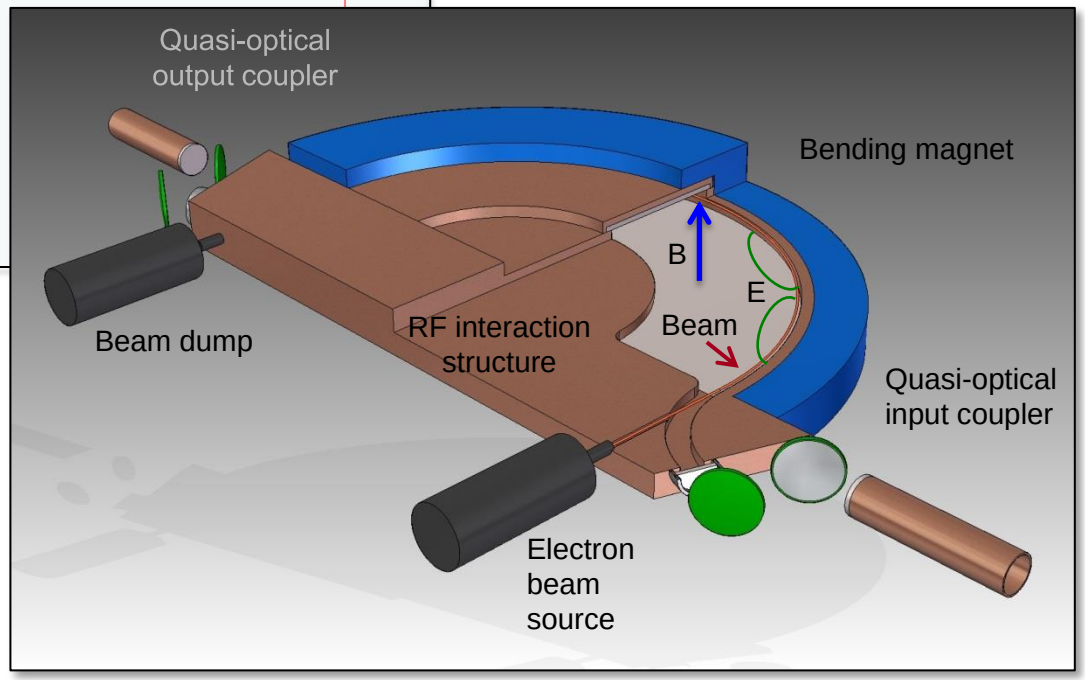

Initial Look at Mode Competition Issue is Encouraging

Electric Field Vector

Lossy or diffraction surfaces

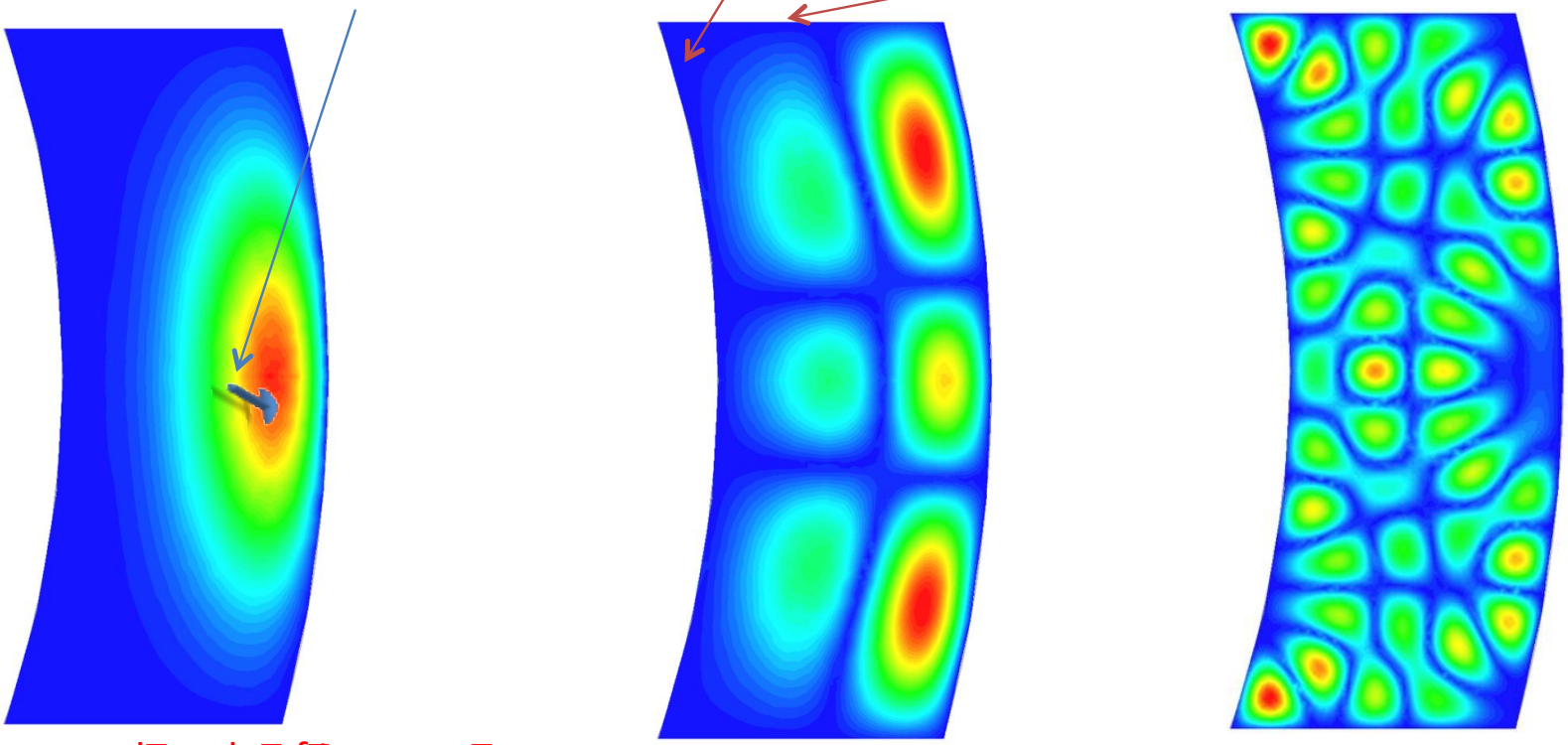

Fundamental mode of interest:

- Guided only by the spherical shell, hence it has a very high Q
- The electric field direction of that mode is coming out of the board
- The angular frequency of the beam could be made to match that of the em wave if the beam is placed near the peak of the azimuthal electric field

Higher order modes guided by the shell have lower Q; $Q_{hom}/Q_{fundmental}$~$2x10^{-2}$

Volume modes have even lower Q; $Q_{hom}/Q_{fundmental}$~$6x10^{-4}$

235Ghz Corrugated Spherical Shell Structure

Sizes determined so that the wave is in synchronous condition with a 100kV beam. Periodic structure operates at π/2 mode.

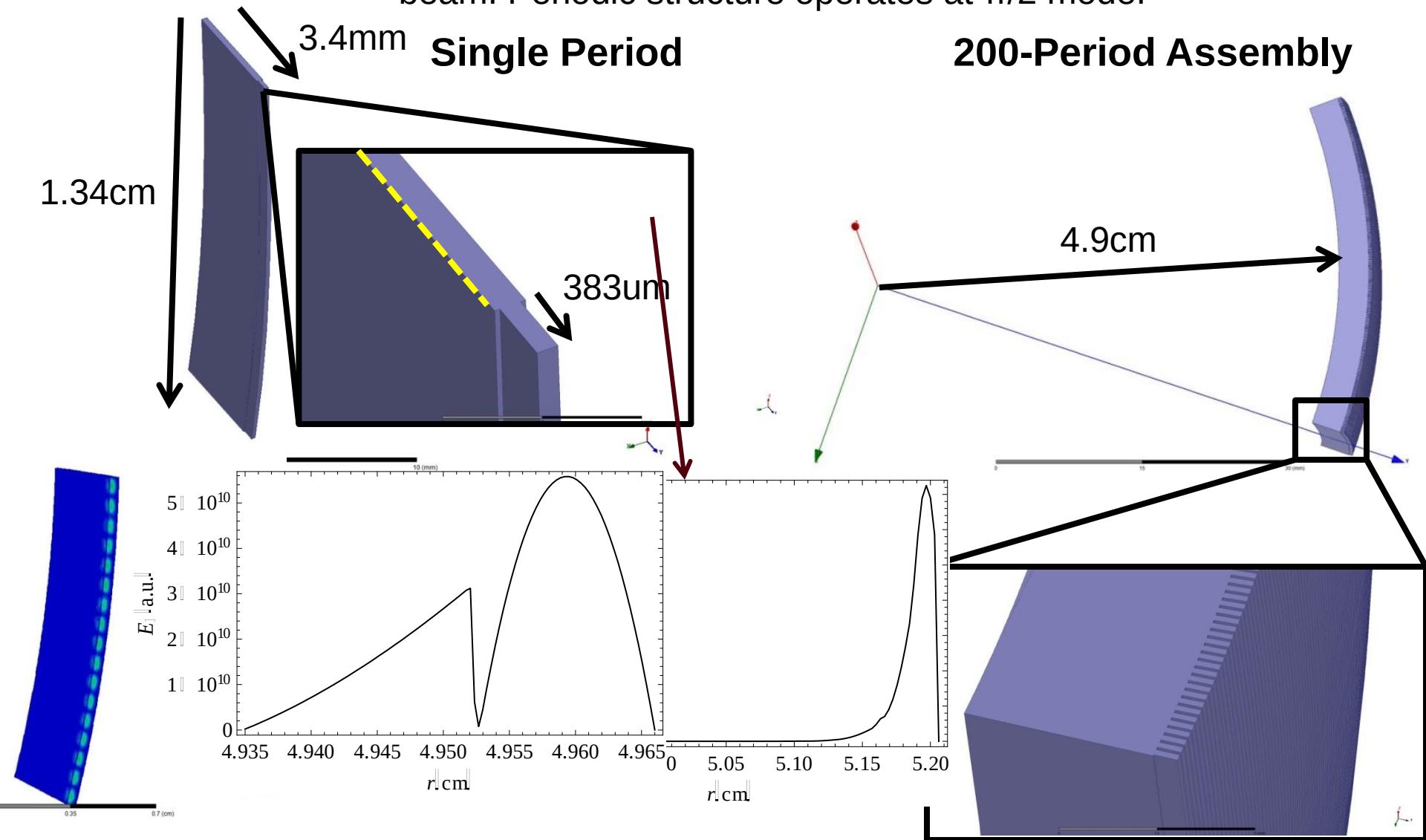

Efficiency of 235 GHz structure, simulation results

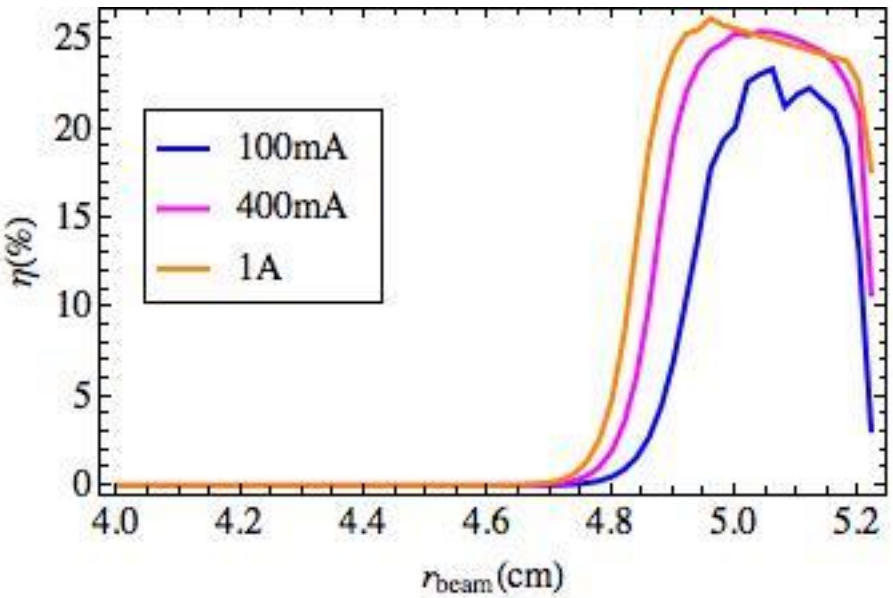

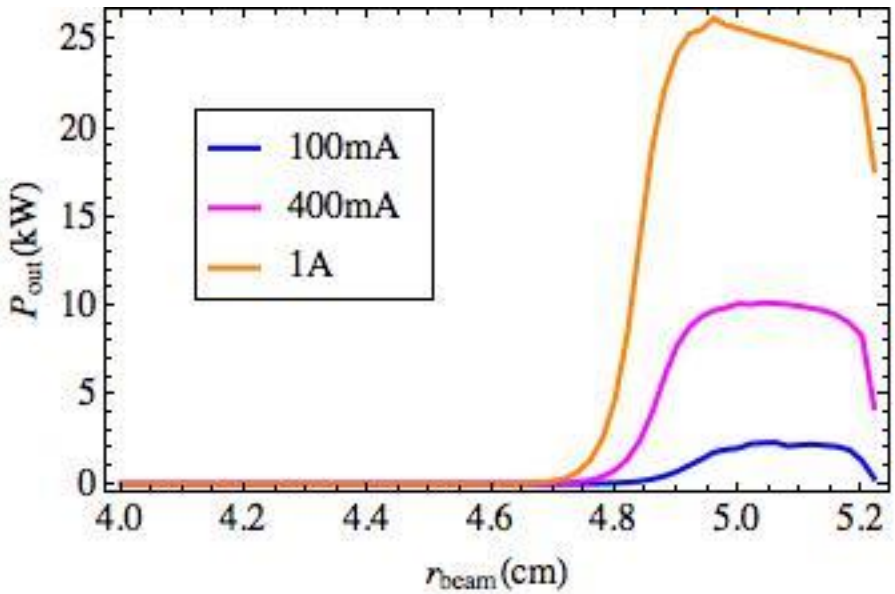

V = 100kV

Cavity Radius = 5.24cm

Cavity Height= 1.6cm for -40dB

Magnetic Field = 21mT

Simulation is done with our new large signal analysis code

Need to Consider the Total System Efficiency : Next-Gen Modulator Systems *Provide* and ***Recover*** Energy

(Mark Kemp)

SLAC

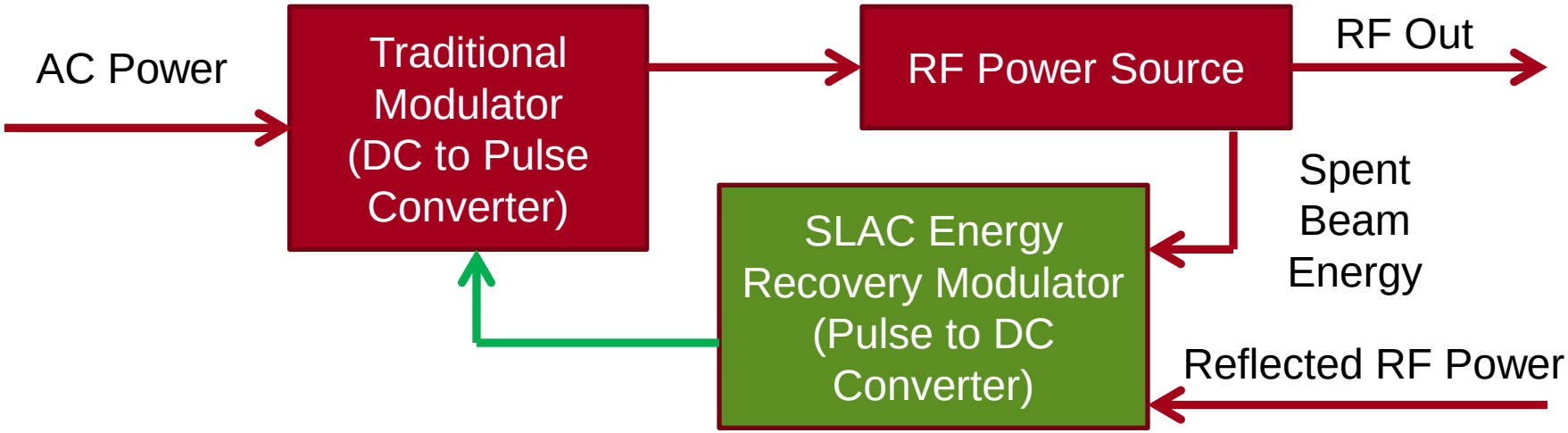

- Feed-forward energy recovery modulator enables traditionally wasted energy to be utilized on subsequent pulses
  - SLAC firsts: Inverse Marx Modulator, Inverse Blumlein Generator

- Taking advantage of low-perveance klystron beams, ultra-high efficiency depressed collectors are used to recover energy

Next-generation modulator development completes holistic approach to RF system design

Thin Film Deposition

- 3-target sputtering system being utilized for thin-film deposition on 2” wafers.
- Elemental targets and nitrogen gas used for reactive DC sputtering of nitride films.
- Start research development with Nb films, followed by NbN and then SiN or AlN for the insulating layers.

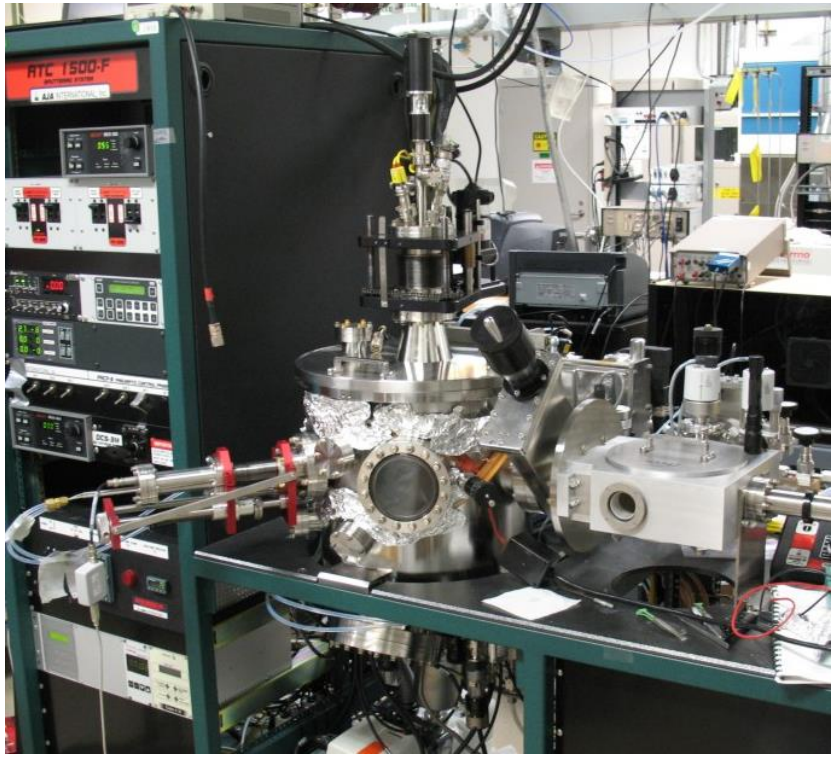

Thin Film Development Progression

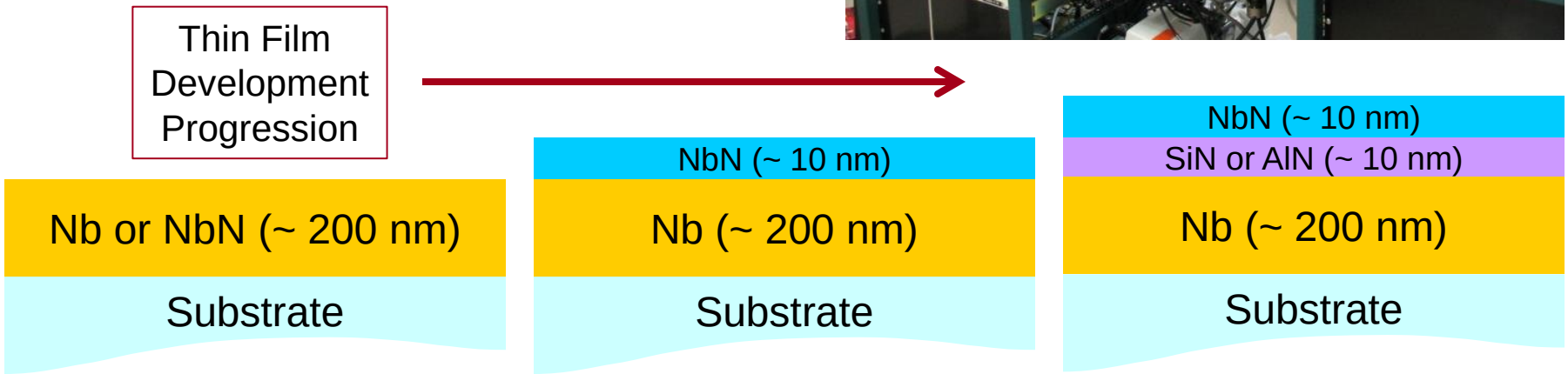

Dedicated Cryostat for Cavity Testing

- Recently completed assembly of a 2nd cryostat dedicated to cavity testing.
- Improvements on old design:
  - Remote-motor cryorefrigerator – to reduce cavity vibrations and fluctuations in resonant frequency.
  - Increased pumping – to improve cryostat base pressure (5e-9 torr vs. 1e-6 torr prior).
  - New cleaning procedures – to reduce surface contamination and particles.
  - Improved thermal isolation – to increase 4 K cooling power reserved for cavity dissipation.
- Test of vacuum and cryogenic components completed → Working now on initial RF tests and calibrations.

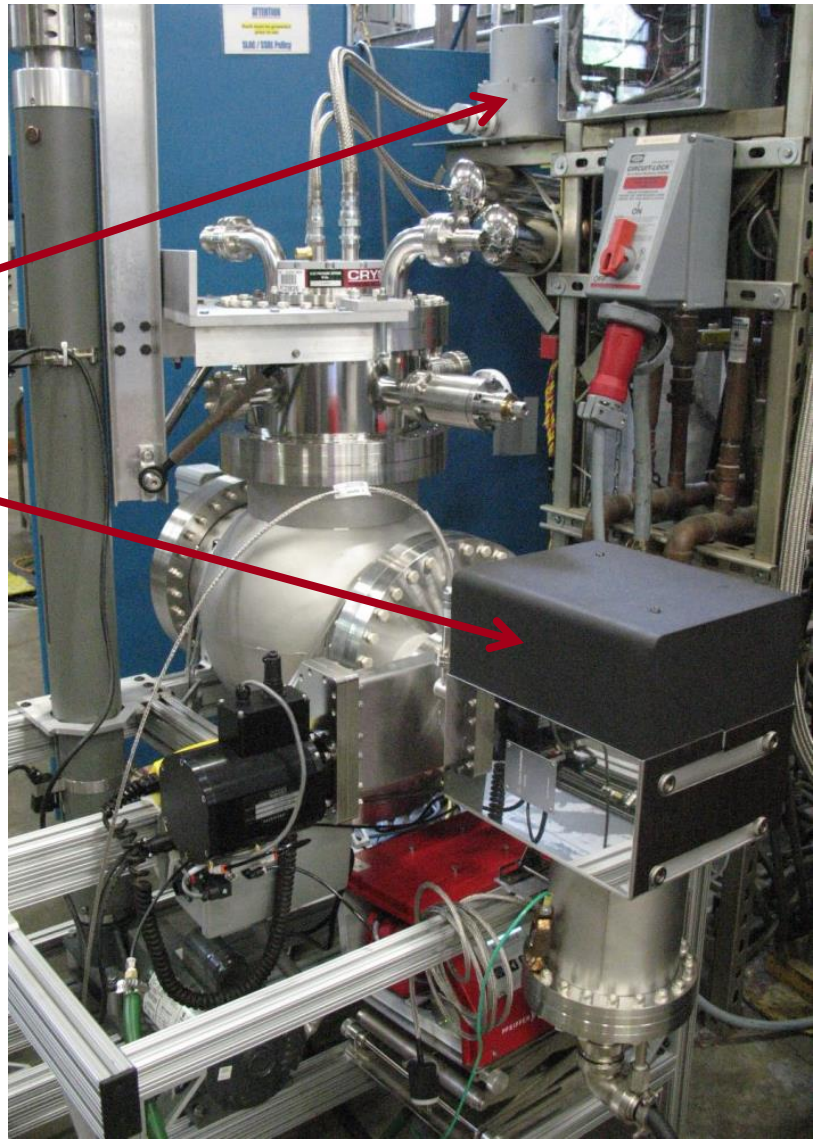

New Application, Search for a Dark Photon

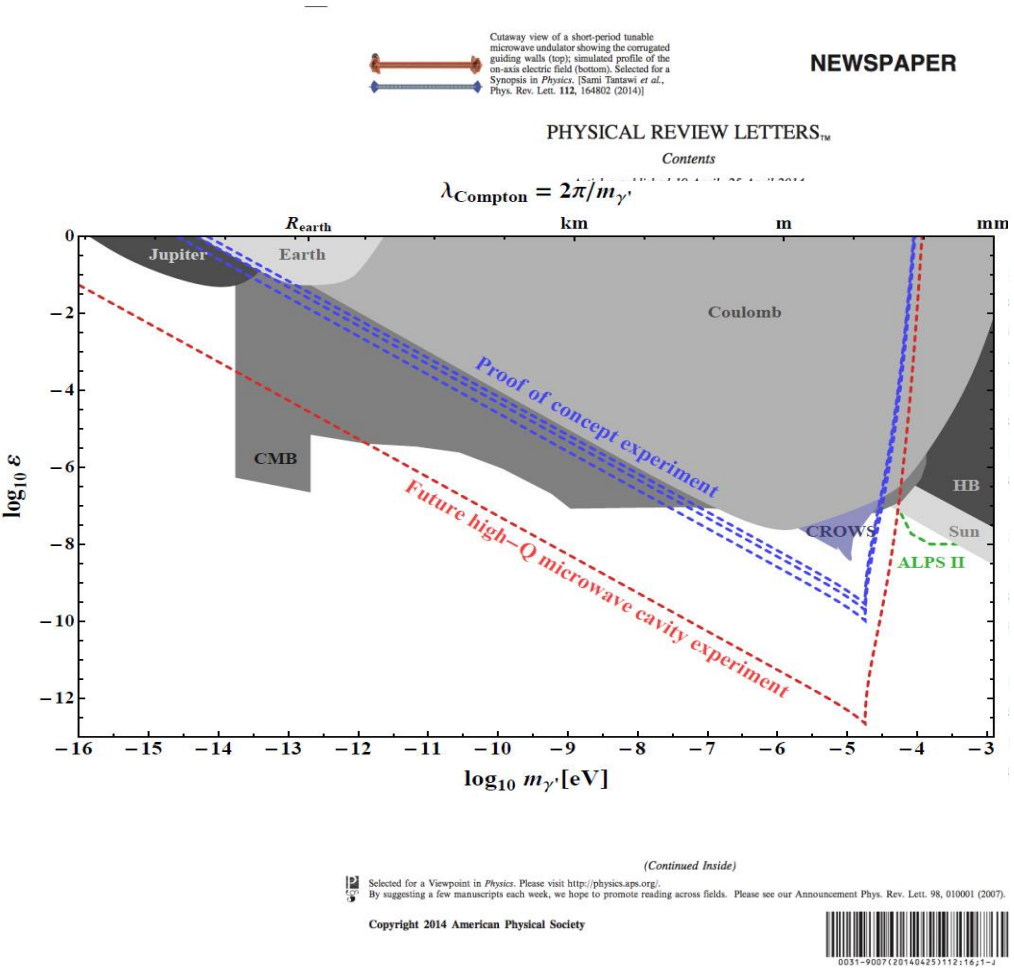

The Conclusion of the HG collaboration and the future: Advanced Ultra-High Frequency Acceleration

Summary- There is a Solid Foundation for for Extending to Higher Frequency and Gradient

- Increased attainable gradients in accelerator structures by factor of ~3, from 65 MV/m to above 170 MV/m
- New Structure Topologies have the potential to go beyond 200 MV/m ***efficiently***:
  - ***The technology have strong implication for superconducting technology, it could:***
    - ***Increase the gradient of superconducting structures to 70 MV/m***
    - ***Reduce the dynamic losses by as much as a factor of 3.***
  - ***Efficient high gradient structure could allow for an economical driver of a plasma/wake field accelerators***
  - ***Proton accelerator could be revolutionized by this technology.***
  - ***Certainly, this paves the way for future coliders***
- Finding applications in other disciplines that use this body of research such as BES light sources, medical linacs, high power rf vacuum sources and medical accelerator structures.

Summary (continued)

- Optimized high gradient structures also have *very high shunt impedance*, which can be utilized to improve RF to beam efficiency.
- New advances in RF source designs improve efficiency and reduce operating voltages:
  - One can then design efficient modulators with short rise and fall times
  - One can invent an RF unit that does not utilize pulse compression, much higher efficiency for the overall system
  - Cost effective depressed collectors can be included in the design
  - No electromagnets in the klystron system
- An overall system efficiencies improvement can allow operations of normal conducting structures beyond 10 KHz.