Measuring the internal geometry of the TD24 Accelerating Structure for CLIC using RF methods.

Marie-Curie PhD student: Natalia Galindo Muñoz

Outline:

Introduction

- TD24 Accelerating Structure (AS) for CLIC.
- CLIC alignment of the AS.
- Tolerances requirements of the AS
- Pre-alignment requirements of the AS
- The PACMAN project
- The technical goal and scientific project

Methods investigated

- Method 1: Wire as an excitation
- Method 2: Wire as a perturbation

Test bench

RF simulation results using HFSS

- 1 cell simulation
- Multi-cell simulation

Conclusions

TD24 Accelerating Structure (AS) for CLIC

- Traveling wave structure.
- Accelerating mode TM010 @**12GHz**.
- 24 tapered coupled cells working on the **2π/3** mode.
- 2 coupling cells for the input and output power.
- Cell geometry varies along the structure in order to achieve **constant gradient**.
- Damping waveguides with RF absorbers for the High Order Modes (**HOM**) in every cell.
- 4 wake field monitors (**WFM**) with 2 RF pick-ups each to extract the TE-like modes and the TM-like modes.

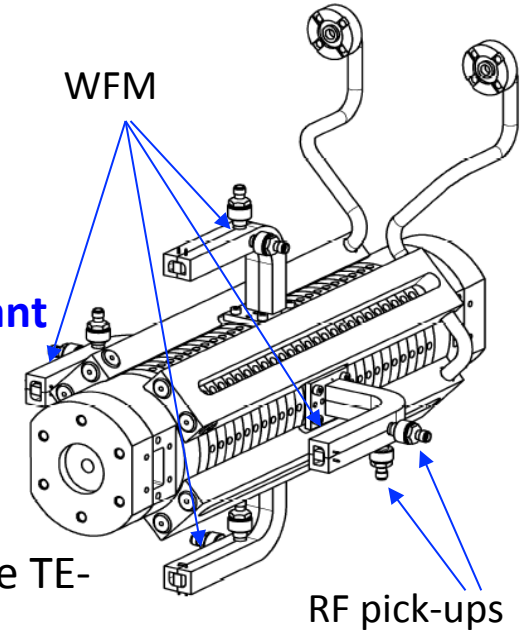

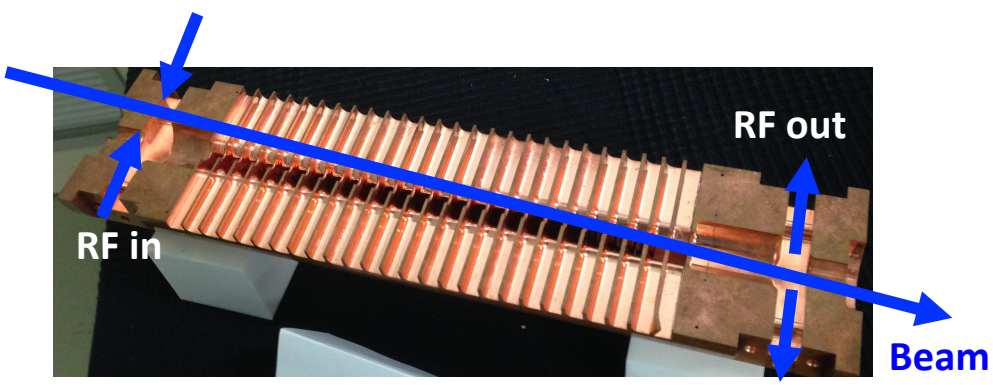

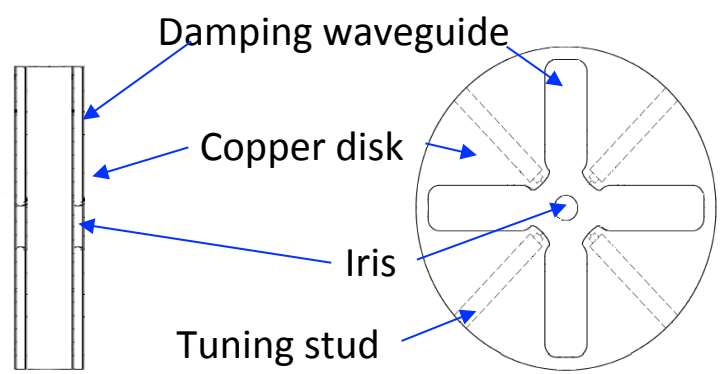

CLIC alignment of the AS.

The CLIC Main Linac will be aligned with the beam with an accuracy of **µm** range in various stages in order to minimise emmitance growth:

1. **Pre-alignment** of the components with a wire system.
2. The **beam-based alignment** is used to correct the residual misalignment from the pre-alignment.

One-to-one steering is used to make the beam pass through the linac.

The Dispersion Free Steering (**DFS**) method is used to optimise the position of the Beam Position Monitors (BPM) and quadrupoles.

The offset of the AS relative to the beam are determined using WFM and minimised using the movers on which the acceleration modules are installed. This process is called **RF alignment**.

Emmitance **tuning knobs** are used to reduce the emmitance growth. These knobs cancel the WF effects globally by moving AS at various locations until the emmitance measured at the end of the linac is minimized.

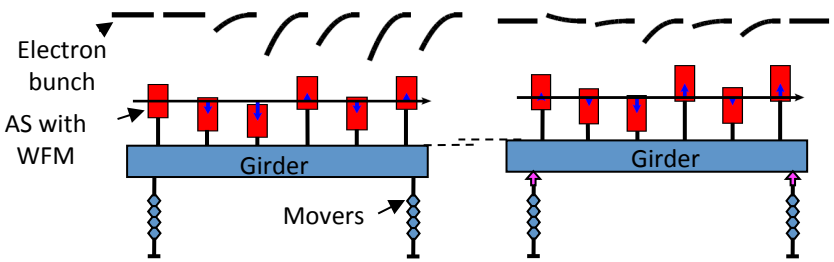

Drawing from "Course B: RF technology normal conducting RF". Walter Wuensch, CERN. Antalya, Turkey. December 2013

Tolerances requirements of the AS

The emmitance growth budget imposes tolerances for every AS.
In the fabrication of the AS, the disks are manufactured individually and then assembled with a bonding process.

The tolerances for each disk (shape accuracy, surface roughness and tolerance flatness) are accomplished in the fabrication process.

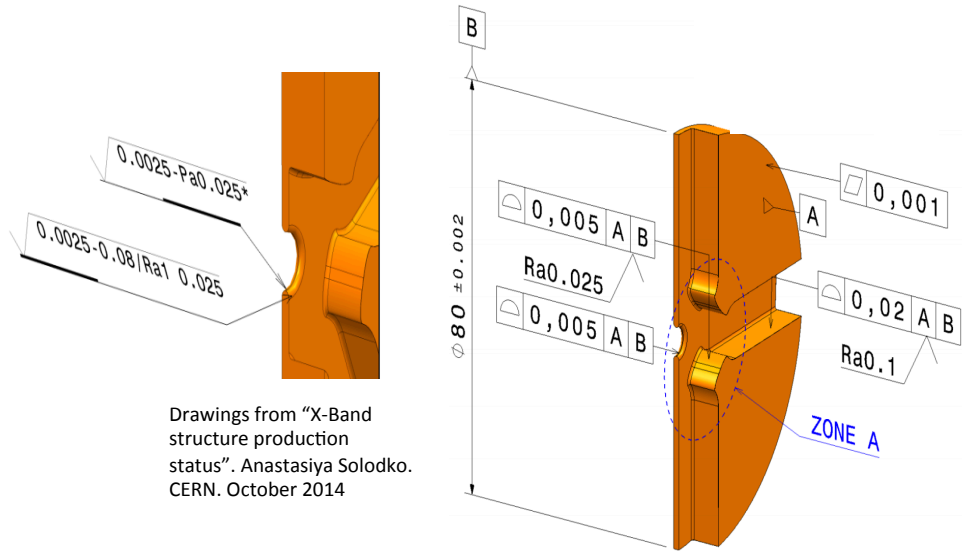

Drawings from "X-Band structure production status". Anastasiya Solodko. CERN. October 2014

These are the errors that could appear after bonding which tolerances have been imposed.

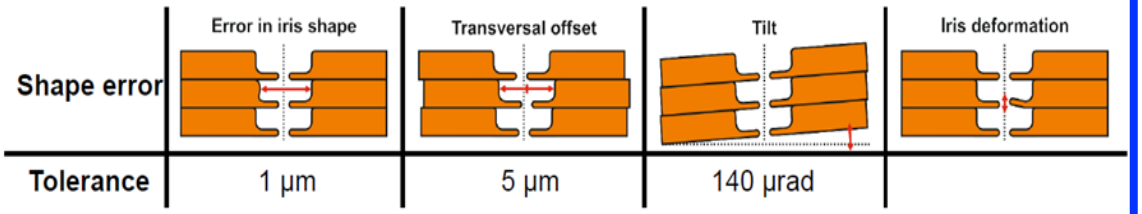

Drawing from "CLIC AS internal metrology". Risto Montonen, Ivan Kassamakov, Edward Hæggström and Kenneth Österberg. University of Helsinki.

When the WFM are assembled in the middle cell, the electrical center of the AS with respect to the WFM must be ≤ **3.5µm**

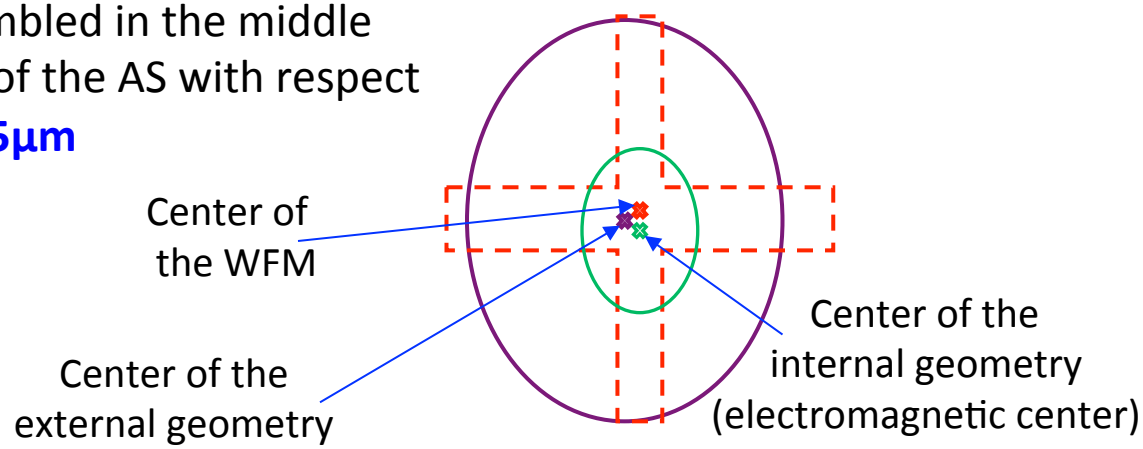

Pre-alignment requirement of the AS

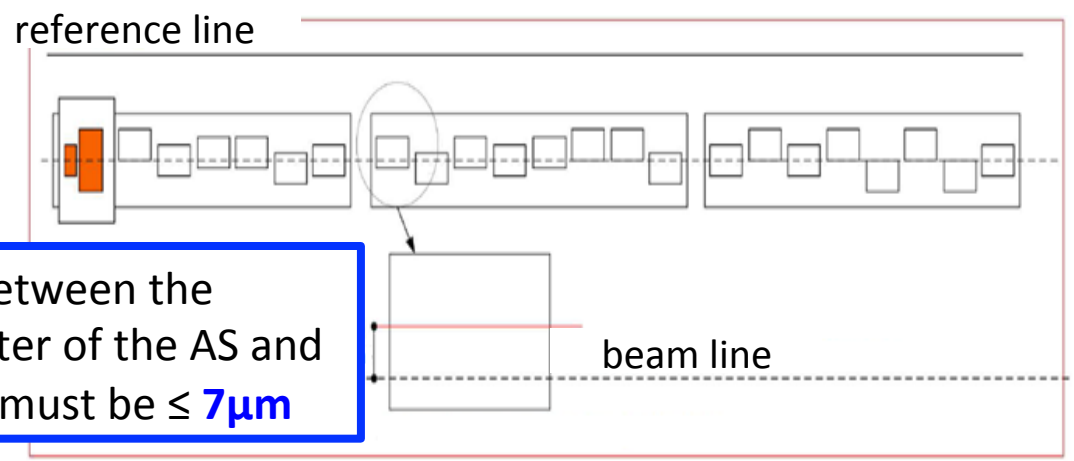

The distance between the electromagnetic center of the AS and the girder axis line must be ≤ **7µm**

Drawing from "RF structure specification" D.Schulte. November 2014. CERN.

PACMAN

Particle **A**ccelerator **C**omponent's **M**etrology and **A**lignment to the **N**anometer scale.

Marie Curie - Ph.D. Training Network hosted at CERN and supported by the European Community.

Contract number: PITN-GA-2013-606839-PACMAN

Universities and research centers

CERN, Cranfield University, ETH Eidgenössische Technische Hochschule Zürich Swiss Federal Institute of Technology Zurich, lapp, SYMME, Università degli Studi del Sannio, IFIC, TU Delft, Sapienza 1343

Industrial partners

dmp, ELTOS circuti stampati professionali, ETALON, HEXAGON METROLOGY, METROlab, NATIONAL INSTRUMENTS, SIGMAPHI, TNO innovation for life

Technical goal and scientific project

The goal of PACMAN is to develop a very high accuracy metrology and **pre-alignment** tools in the **µm** regime for the CLIC components (BPM, quadrupoles and AS) for **nm** displacements of the beam and integrate them in a **single automatic test bench** using **stretched wire** methods.

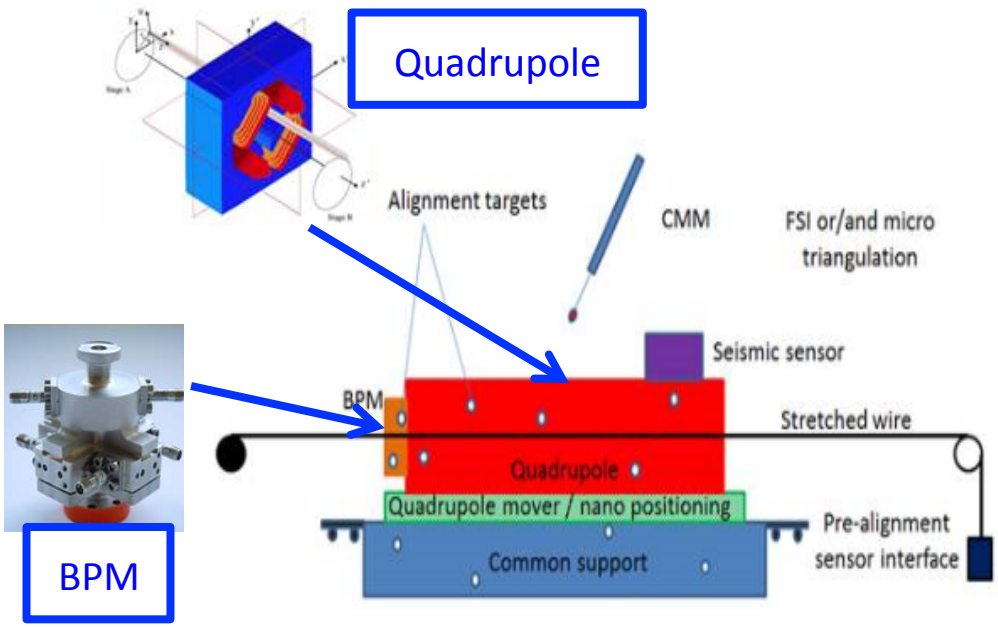

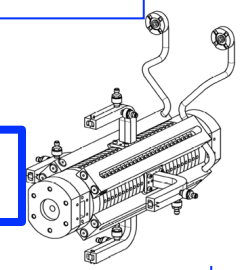

My goals are:

1. To prove the **accuracy of the WFM** to the required level.
2. To device a method of **validating the structure manufacture** by using a stretched wire if possible, so that I could profit from the very accurate ways to measure the position of the wire that are going to be worked out by my fellow colleagues.

Methods investigated

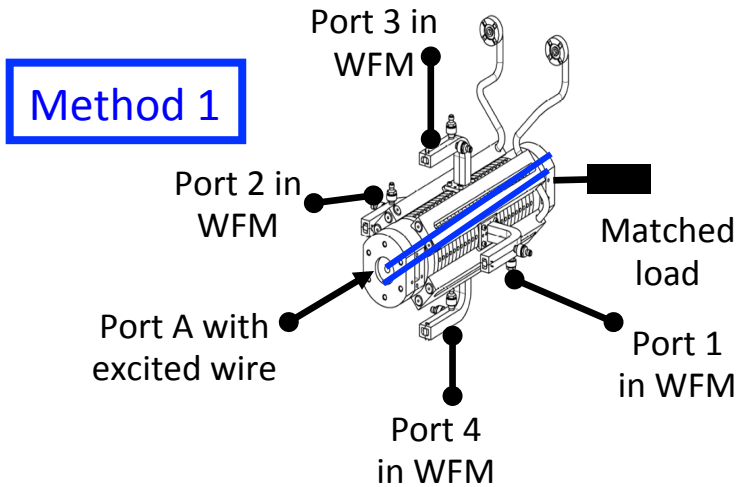

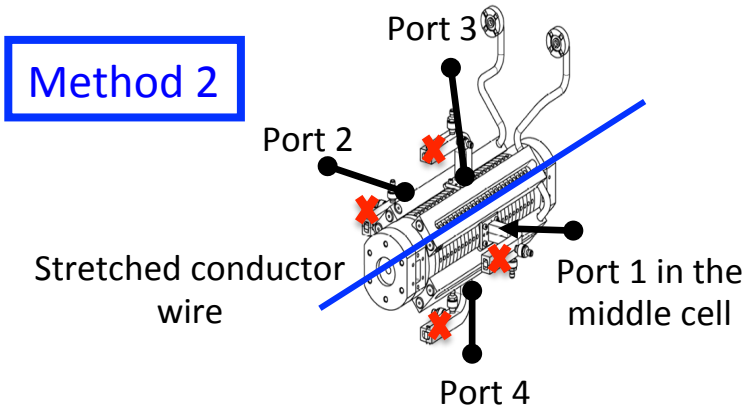

	Method 1: Wire as an excitation	Method 2: Wire as a perturbation
PROS		**Simplicity** of the test bench development. Simplicity of the measurements.
CONS	**More components** required for the measurement: signal launcher, beam pipes, matched circuit. **Mechanical challenge** for two wires in the push-pull mode configuration in a mean iris aperture of 5.5 mm. Would the **power** reach the middle cell from the input coupler without too many losses?	

Method 1:
Wire as an excitation

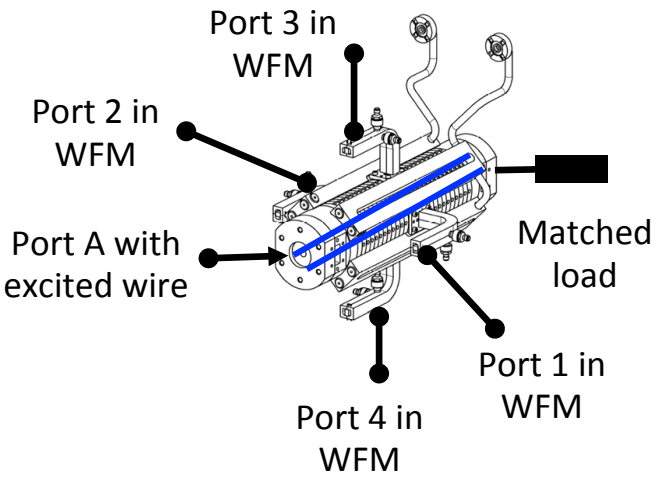

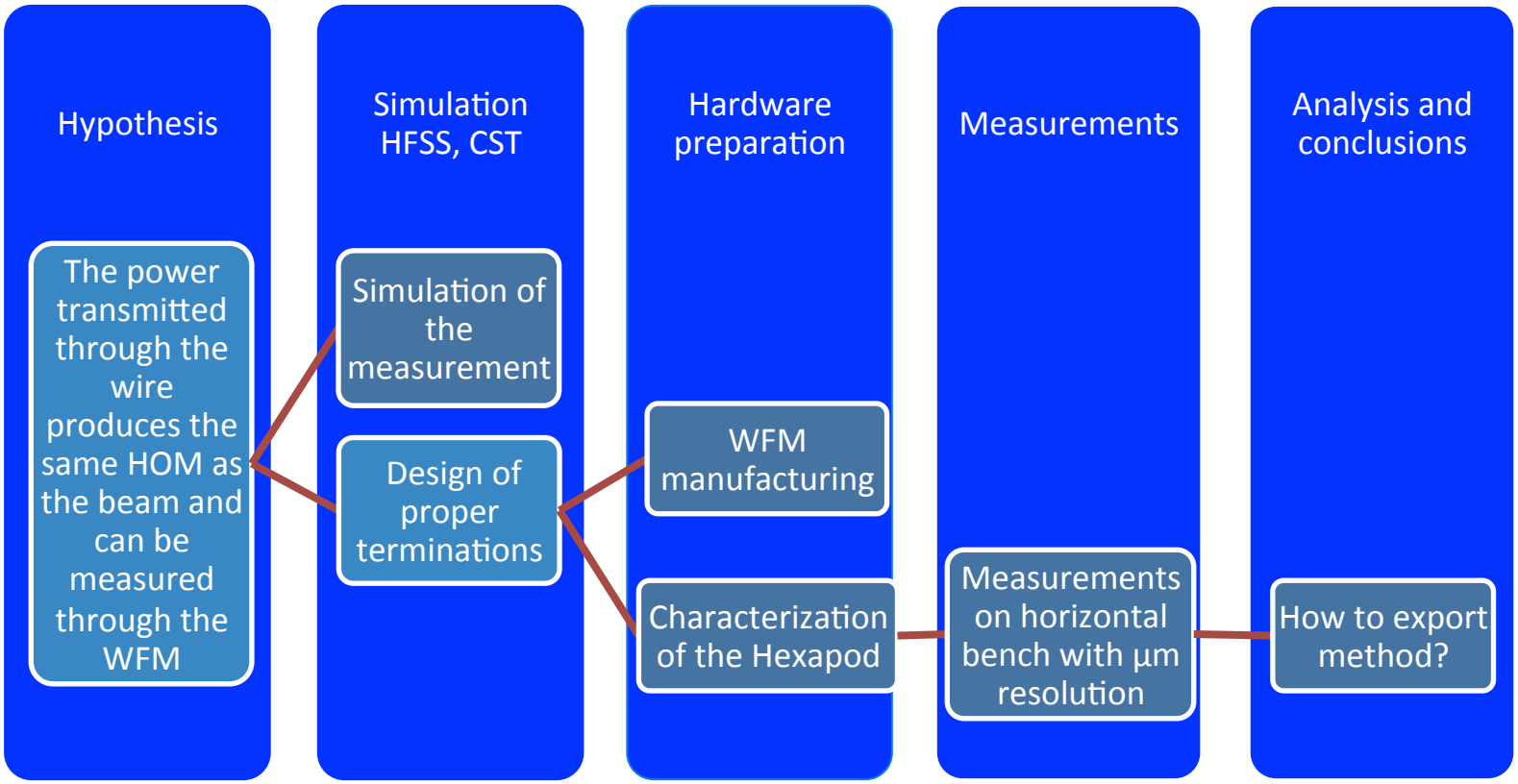

Method 2:
Wire as a perturbation

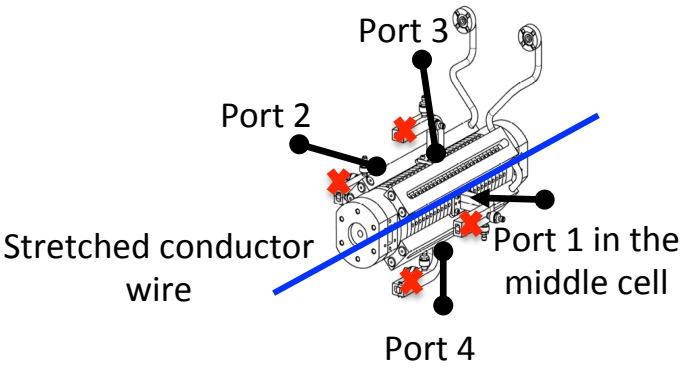

This is the preferred method due to the simplicity of the components required to perform the laboratory measurements.

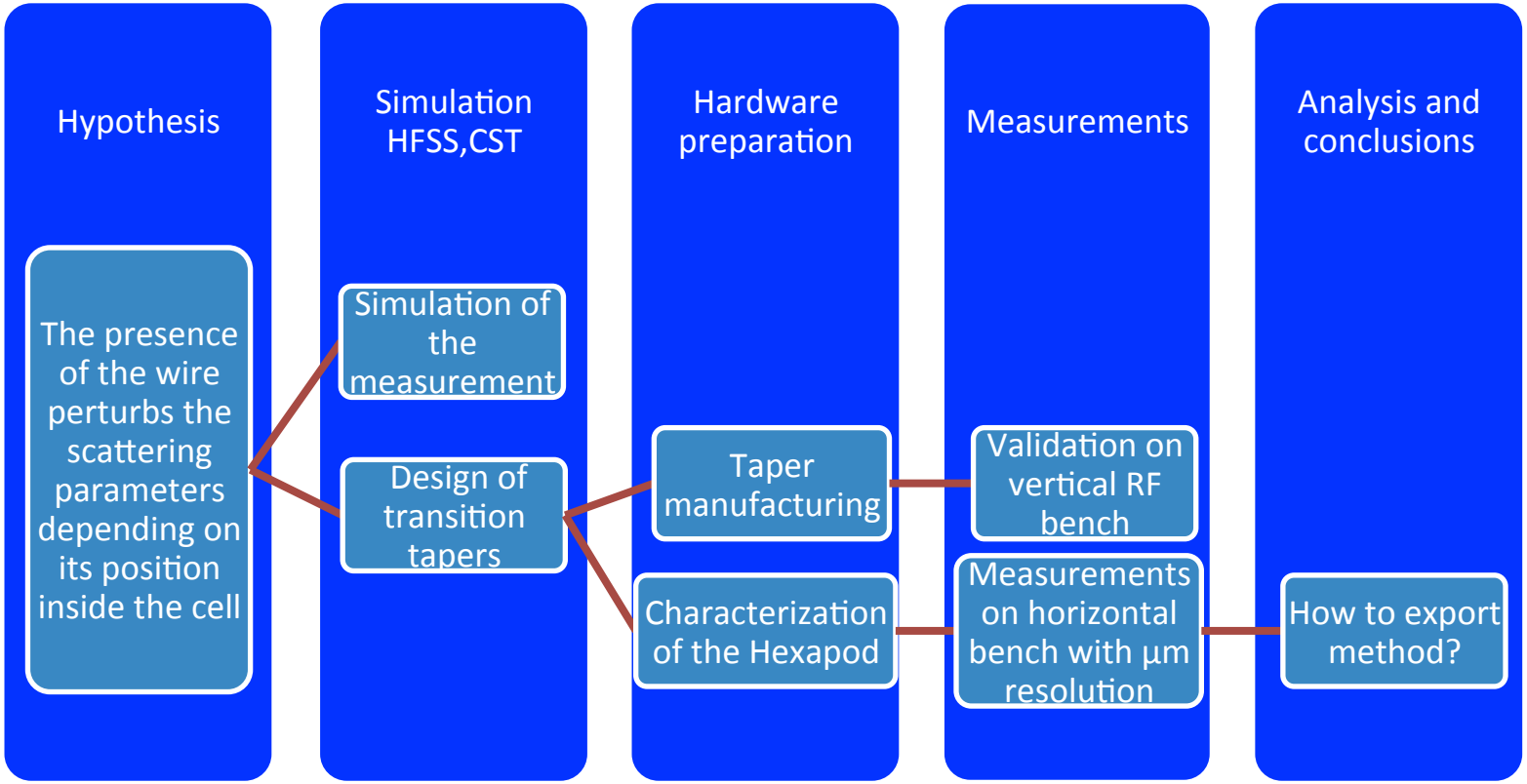

Test Bench

In collaboration with Silvia Zorzetti (WP4. ESR 4.1)

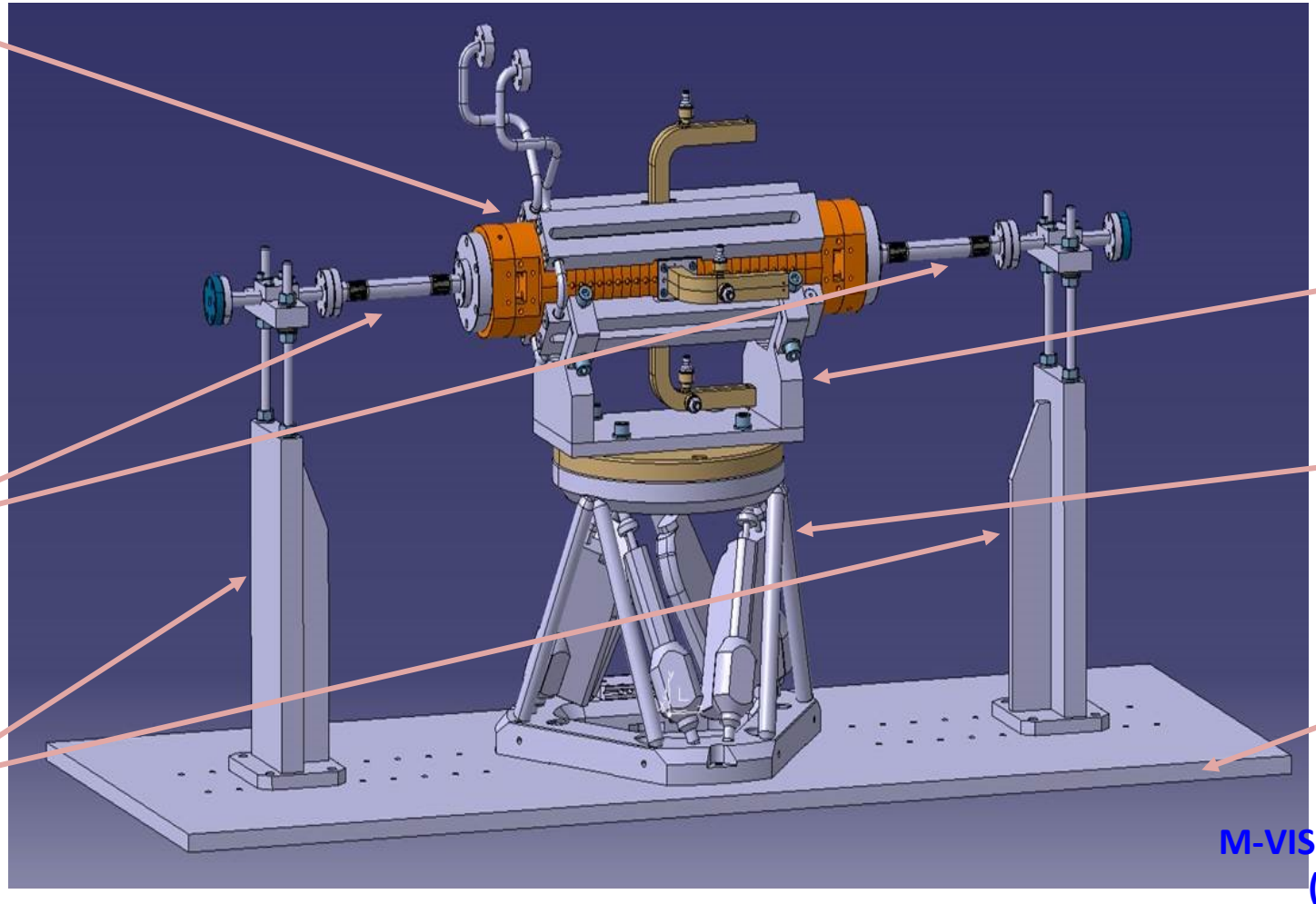

CLIBPMMB0031
drawing of the test bench

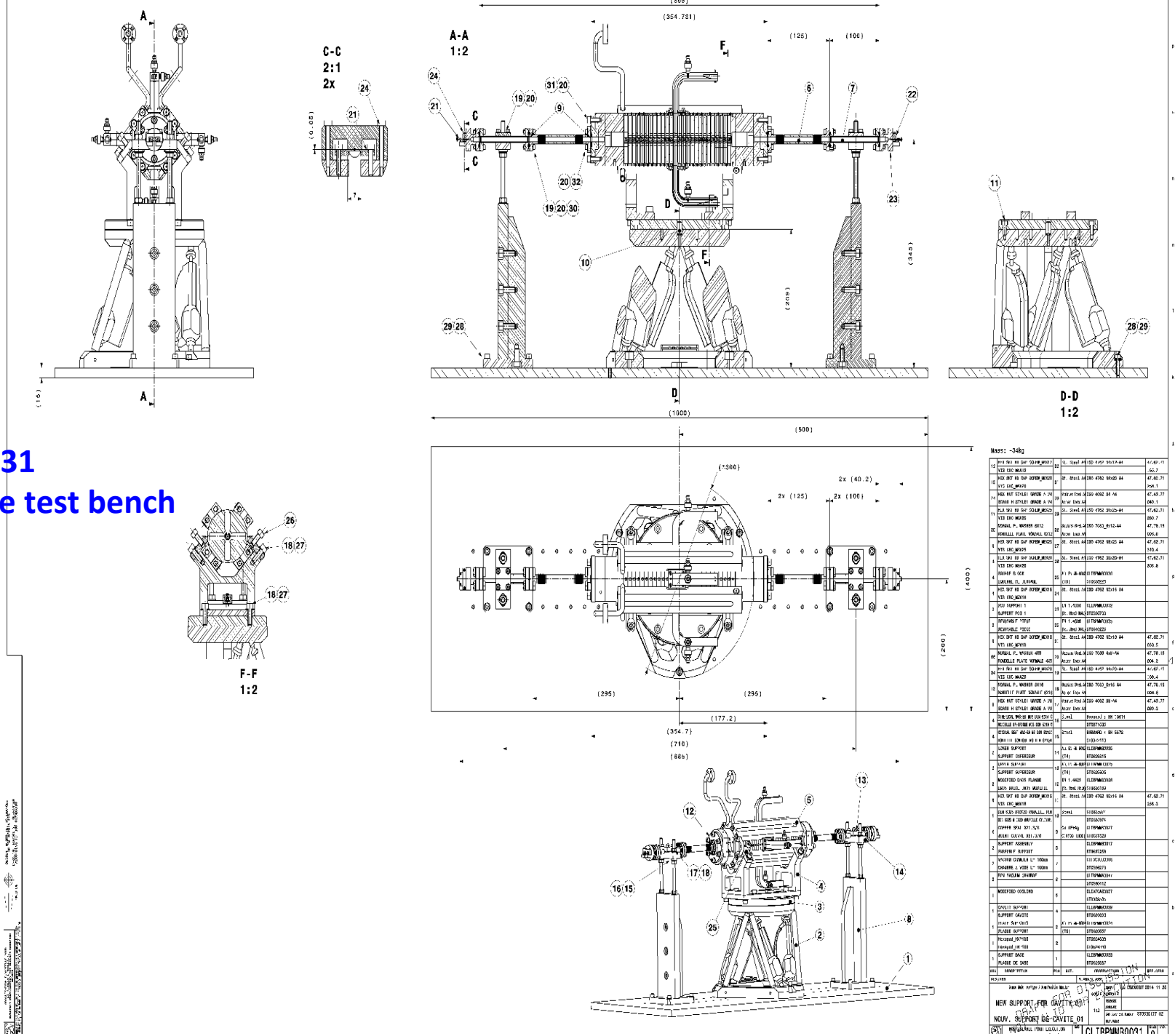

Hexapod's specifications:

HXP100-MECA

Travel (X, Y, Z) [mm]	±29, ±26, -1 to +27
Travel (θ_x, θ_y, θ_z) [°]	±12, ±10, ±20
Minimum incremental motion (X, Y, Z) [µm]	0.5, 0.5, 0.25
Minimum incremental motion (θ_x, θ_y, θ_z) [°]	0.00025 (5µrad), 0.00025, 0.0005
Uni-directional repeatability (X, Y, Z) [µm]	0.5, 0.5, 0.25
Uni-directional repeatability (θ_x, θ_y, θ_z) [°]	0.00025 (3µrad), 0.00025, 0.0005
Bi-directional repeatability (X, Y, Z) [µm]	4, 4, 2
Bi-directional repeatability (θ_x, θ_y, θ_z) [°]	0.002, 0.002, 0.004

Taper
(middle cell to WR-51)
developed for method 2

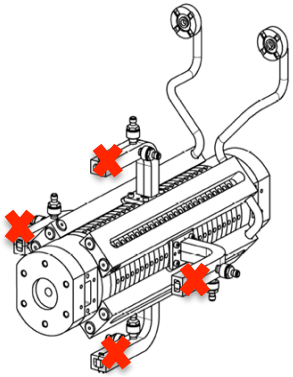

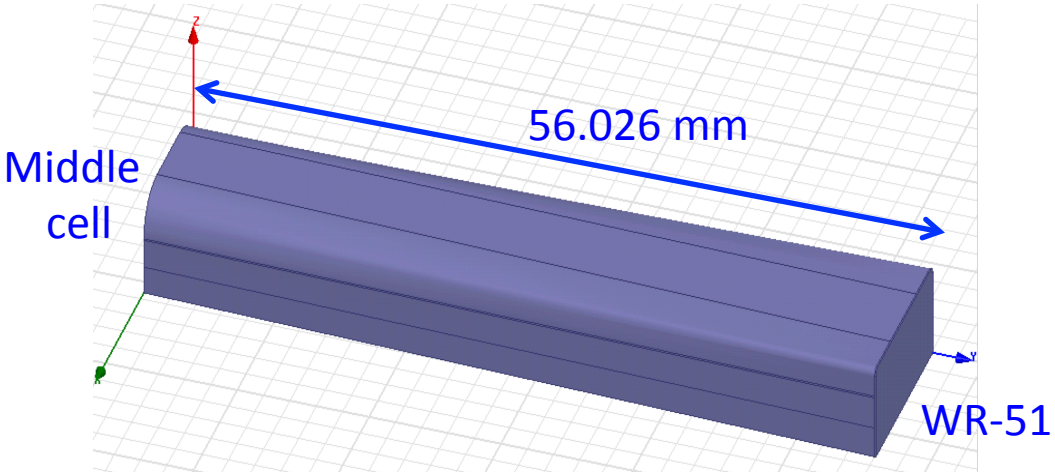

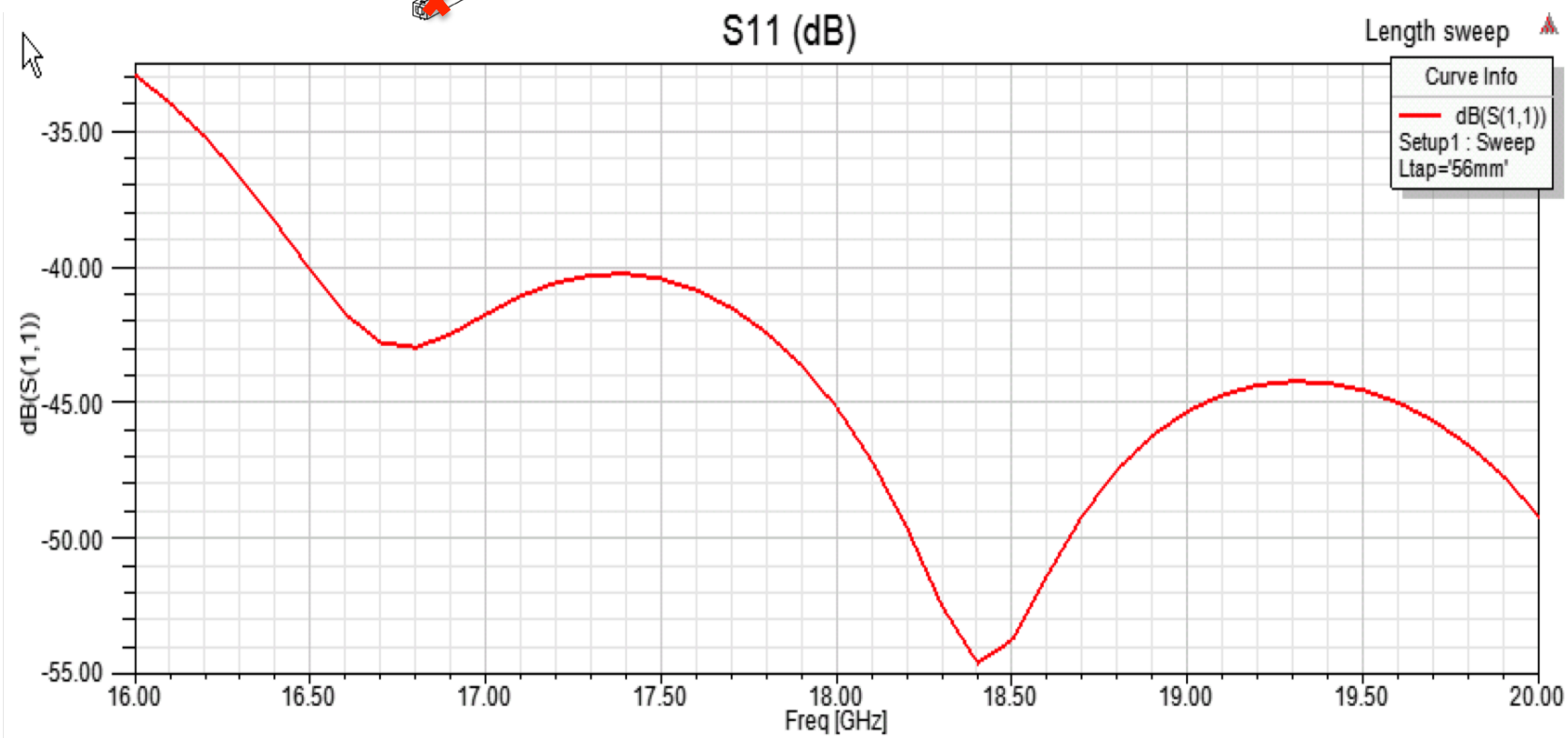

RF simulations using HFSS

The next slides show the simulation results belonging to the RF study of the **method 2**, in which all ports were defined in the middle cell of the AS.

The simulations consisted on studying the Scattering Parameters obtained when exciting from one port the following models:

Simulation of the middle cell

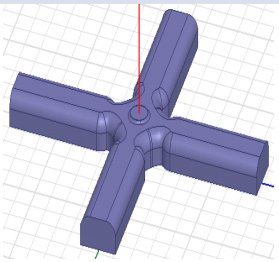

Simulation of 3 cells

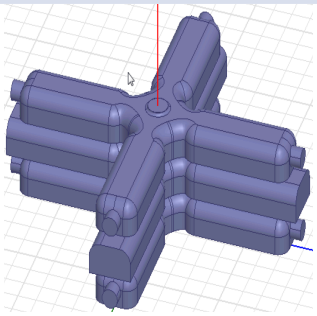

Simulation of 5 cells

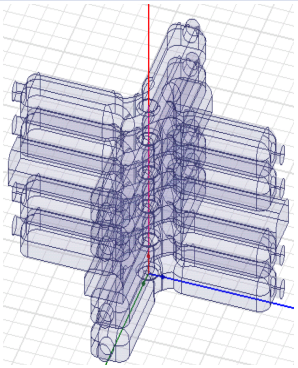

Simulation of the full structure

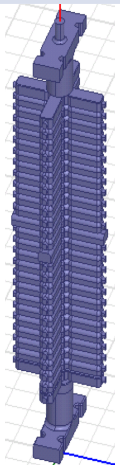

Middle cell

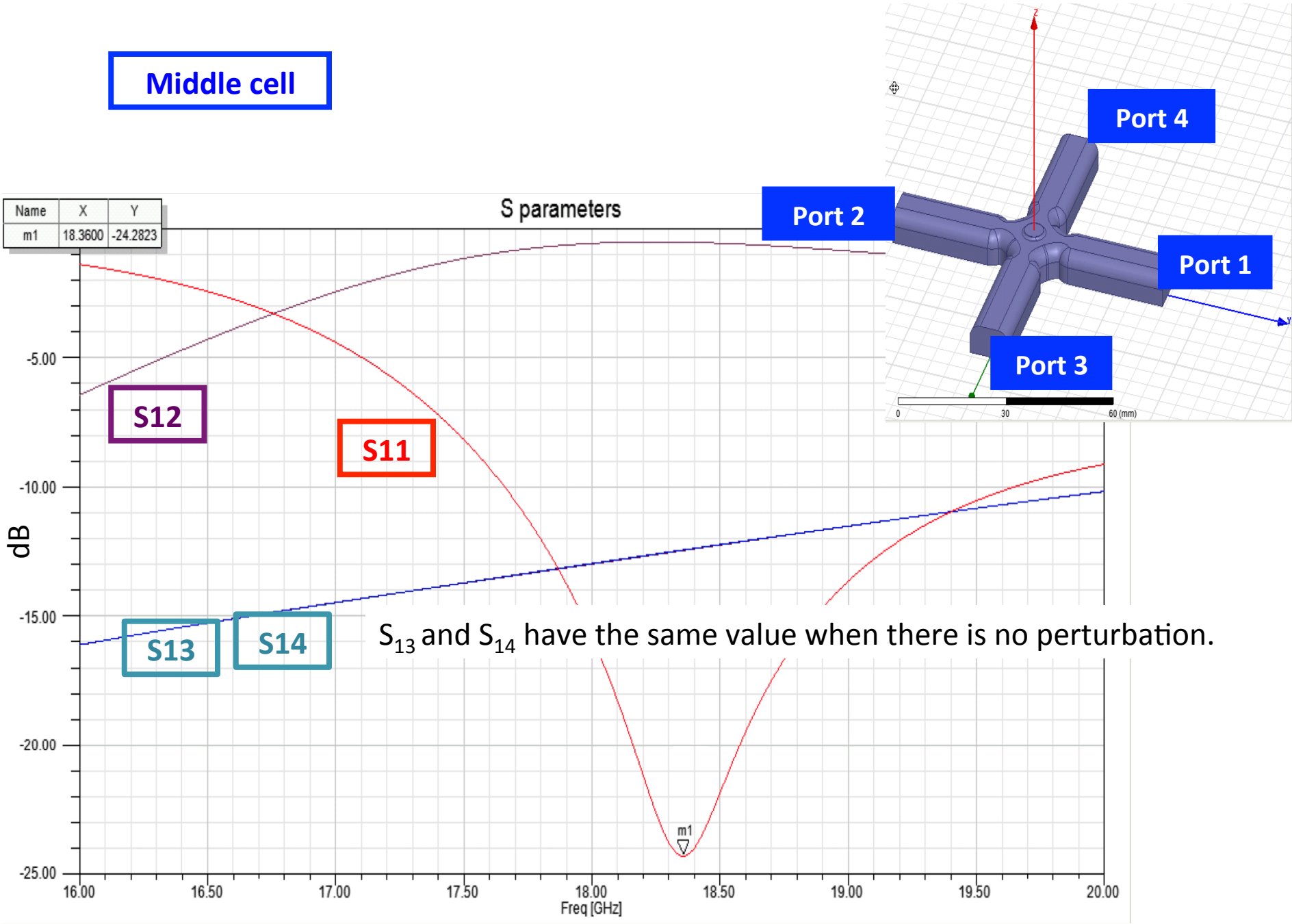

S_{13} and S_{14} have the same value when there is no perturbation.

Middle cell with wire

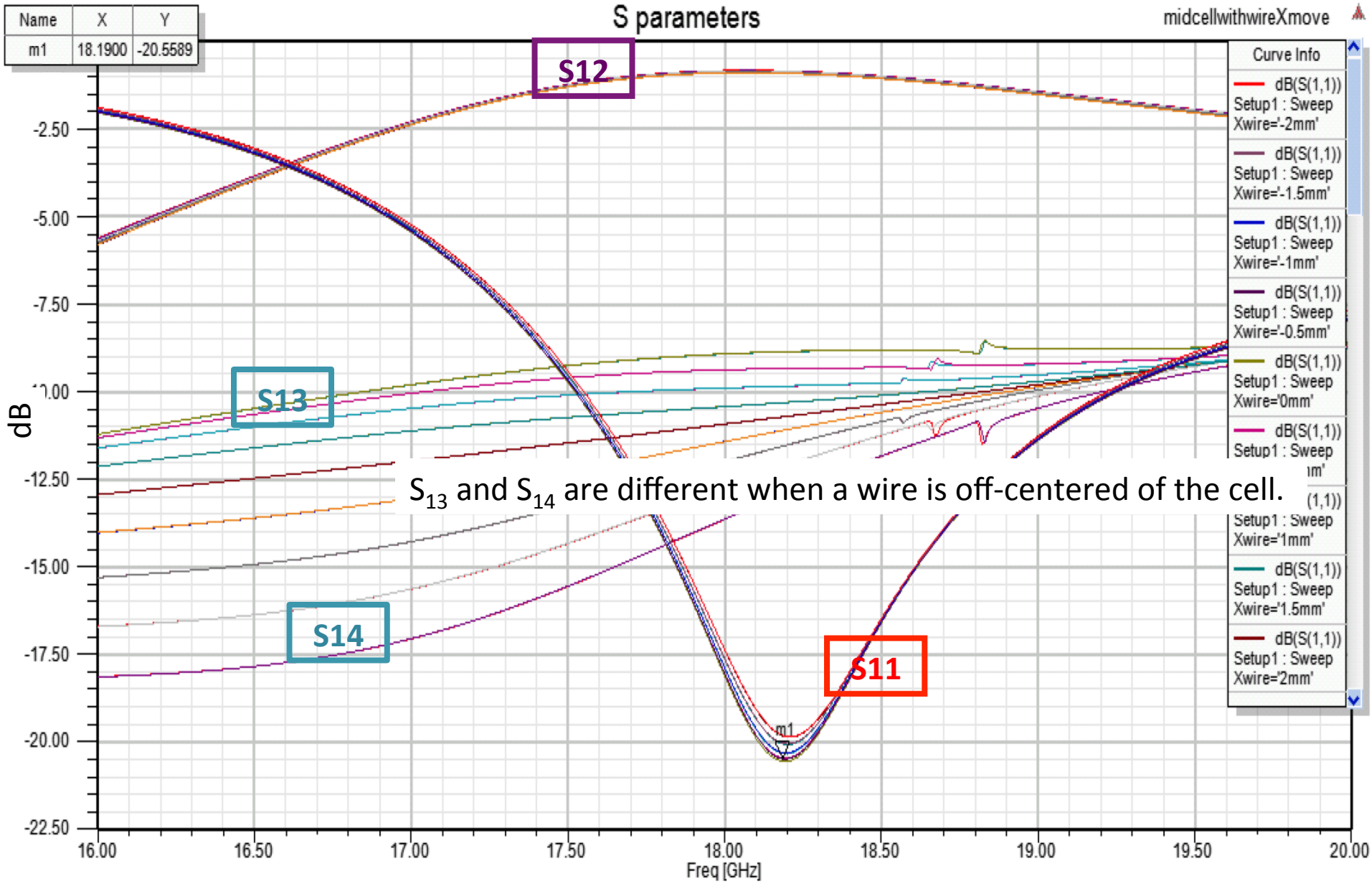

S_{13} and S_{14} are different when a wire is off-centered of the cell.

Now, only focusing on the change of S_{13} and S_{14} when the wire comes closer to the center c

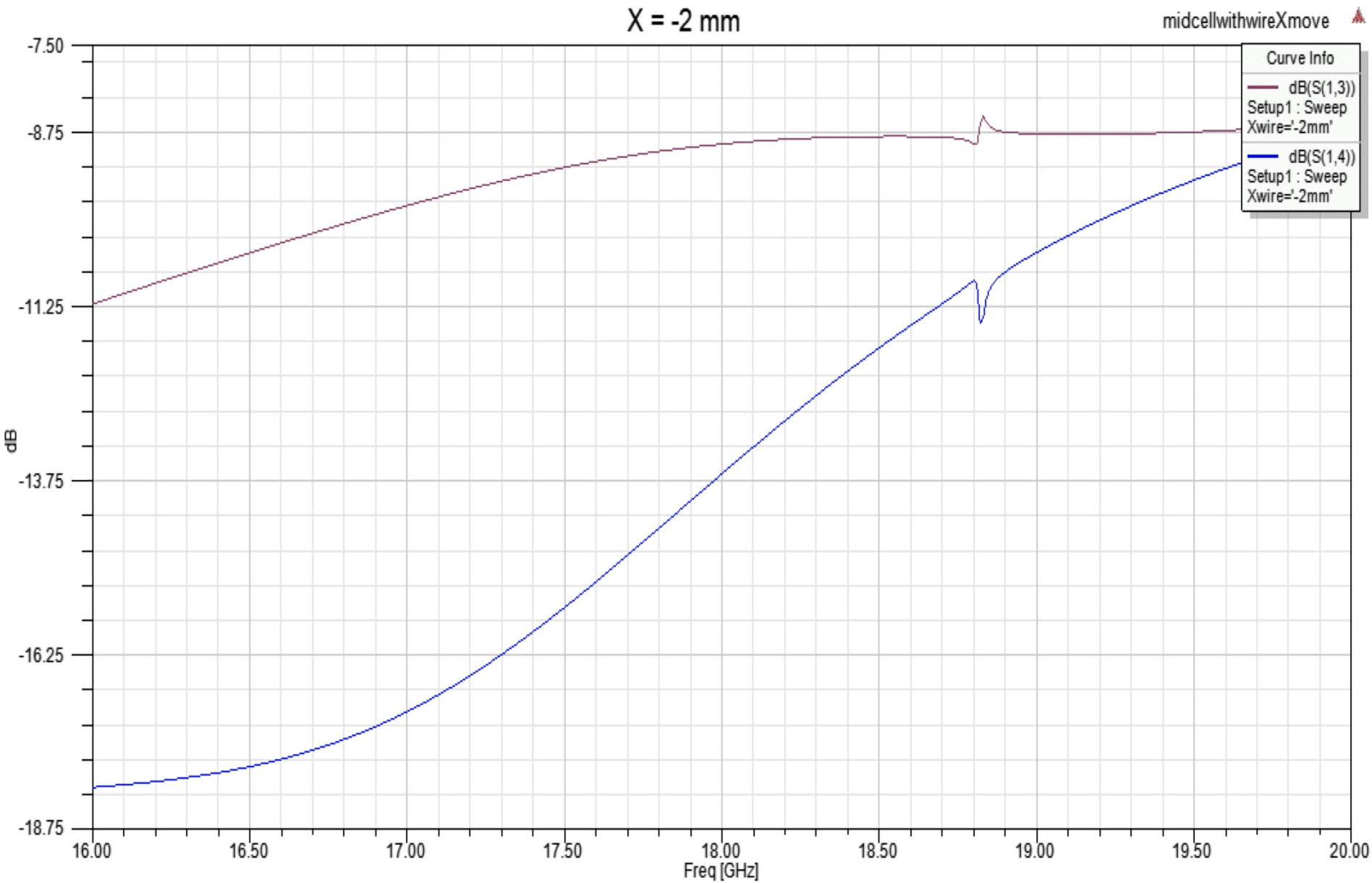

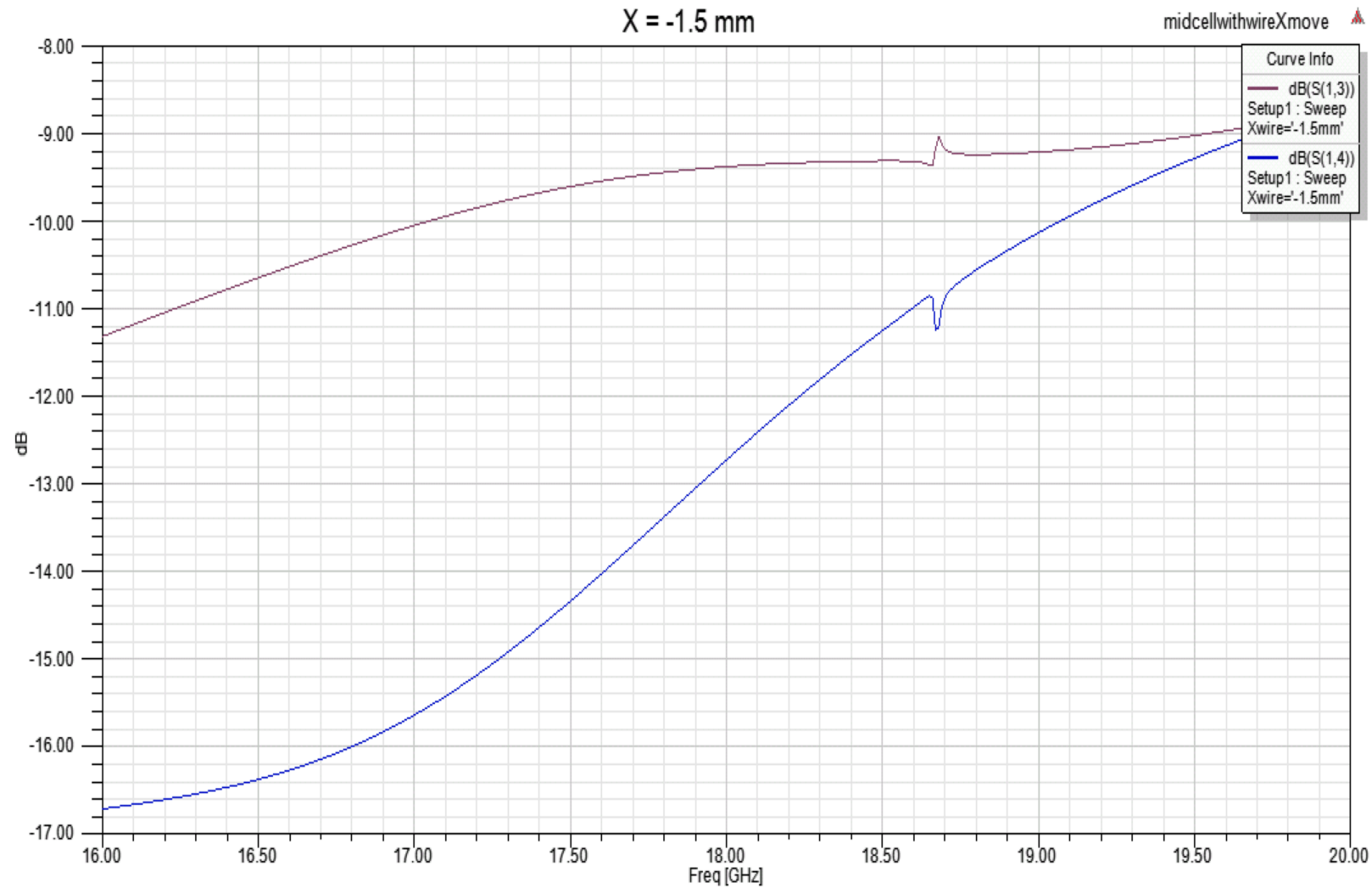
X = -1.5 mm
midcellwithwireXmove
Curve Info
dB(S(1,3))
Setup1 : Sweep
Xwire='-1.5mm'
dB(S(1,4))
Setup1 : Sweep
Xwire='-1.5mm'
dB
-8.00
-9.00
-10.00
-11.00
-12.00
-13.00
-14.00
-15.00
-16.00
-17.00
16.00
16.50
17.00
17.50
18.00
18.50
19.00
19.50
20.00
Freq [GHz]

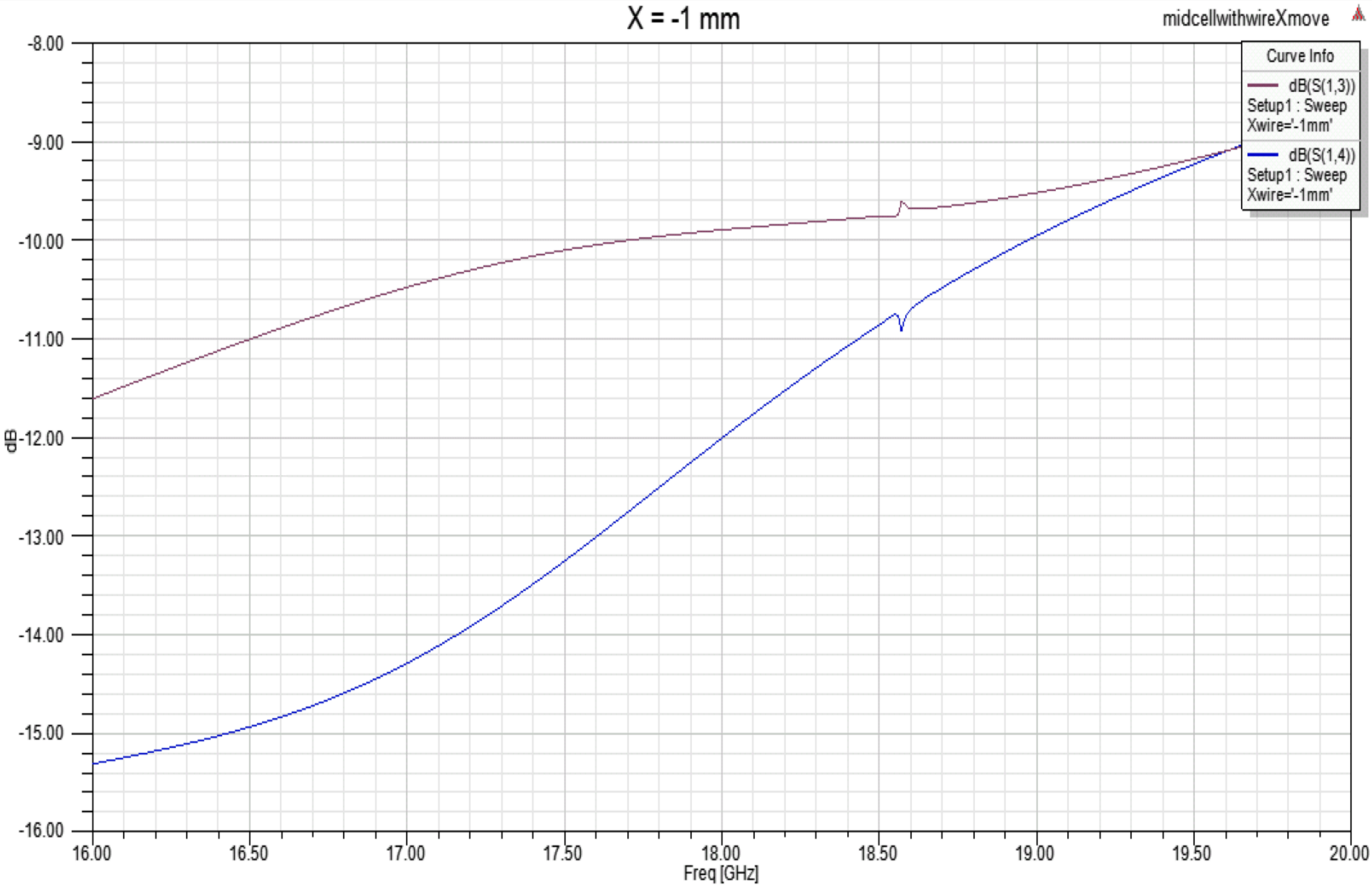
X = -1 mm
midcellwithwireXmove
Curve Info
dB(S(1,3))
Setup1 : Sweep
Xwire='-1mm'
dB(S(1,4))
Setup1 : Sweep
Xwire='-1mm'
-8.00
-9.00
-10.00
-11.00
-12.00
-13.00
-14.00
-15.00
-16.00
dB
16.00
16.50
17.00
17.50
18.00
18.50
19.00
19.50
20.00
Freq [GHz]

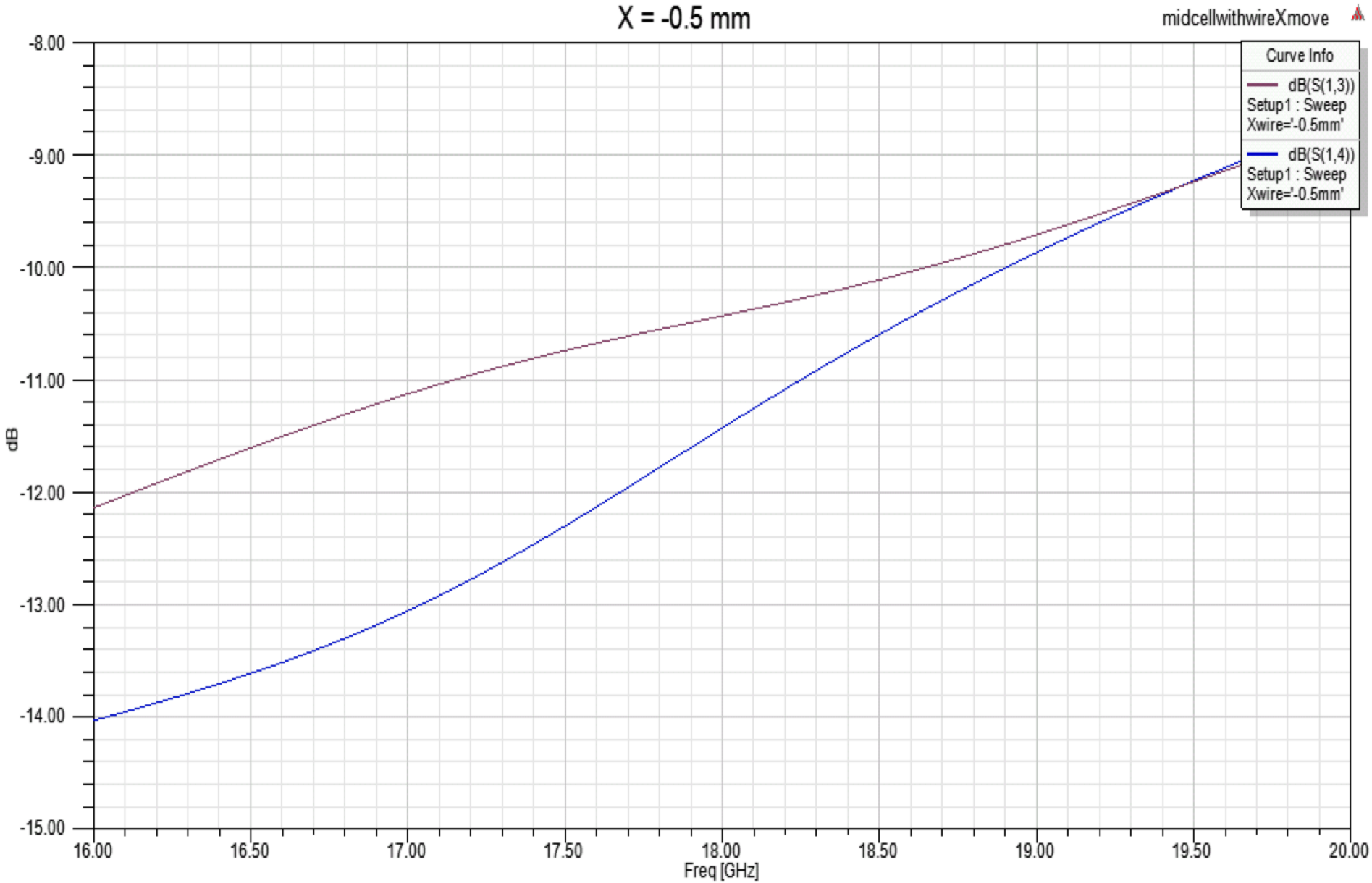
X = -0.5 mm
midcellwithwireXmove
Curve Info
dB(S(1,3))
Setup1 : Sweep
Xwire='-0.5mm'
dB(S(1,4))
Setup1 : Sweep
Xwire='-0.5mm'
-8.00
-9.00
-10.00
-11.00
-12.00
-13.00
-14.00
-15.00
dB
16.00
16.50
17.00
17.50
18.00
18.50
19.00
19.50
20.00
Freq [GHz]

S_{13} and S_{14} come closer and closer until they are the same when the wire is in the center of the cell.

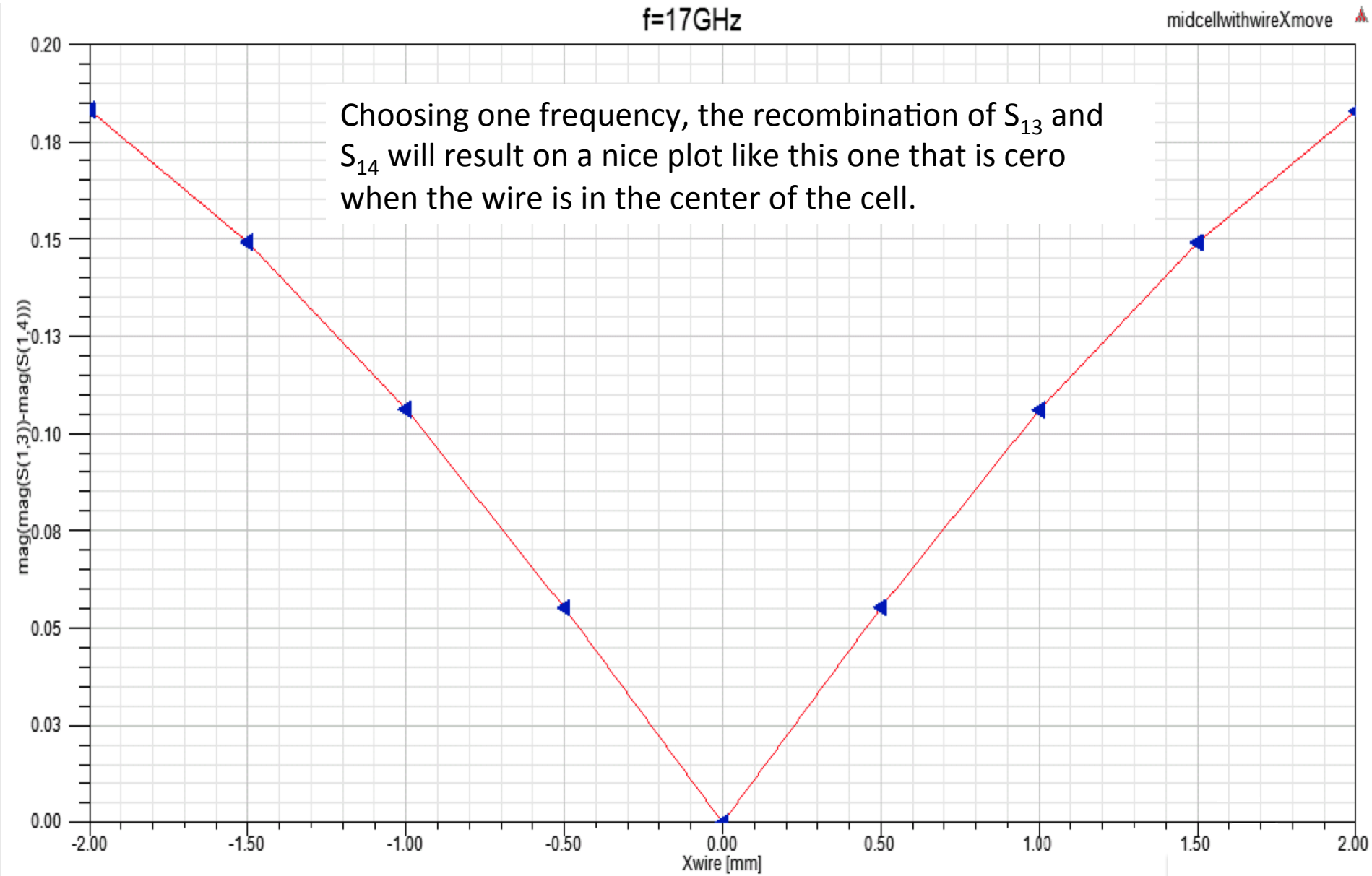

Choosing one frequency, the recombination of S_{13} and S_{14} will result on a nice plot like this one that is cero when the wire is in the center of the cell.

3 cells without wire

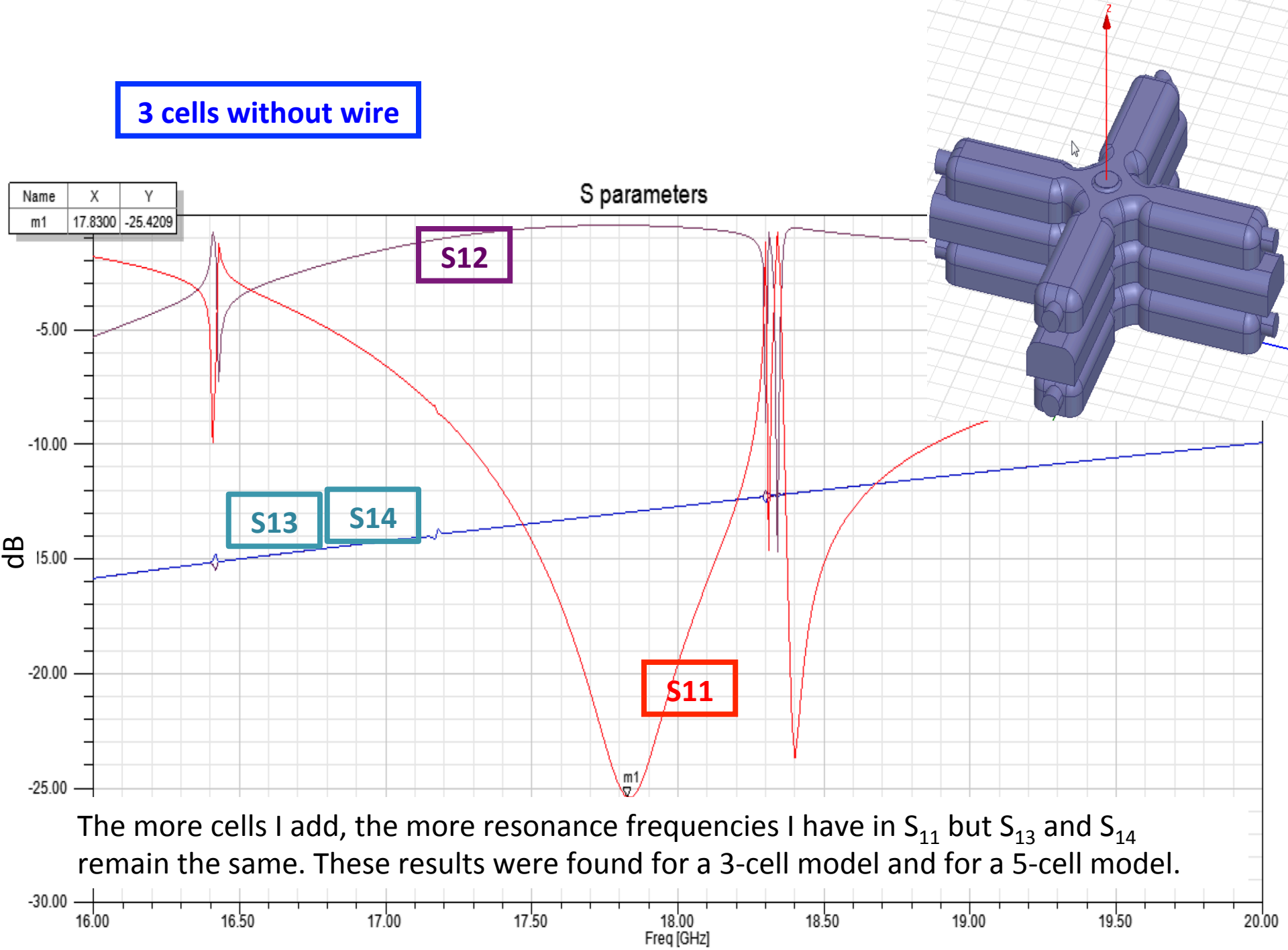

The more cells I add, the more resonance frequencies I have in S_{11} but S_{13} and S_{14} remain the same. These results were found for a 3-cell model and for a 5-cell model.

Full structure no wire

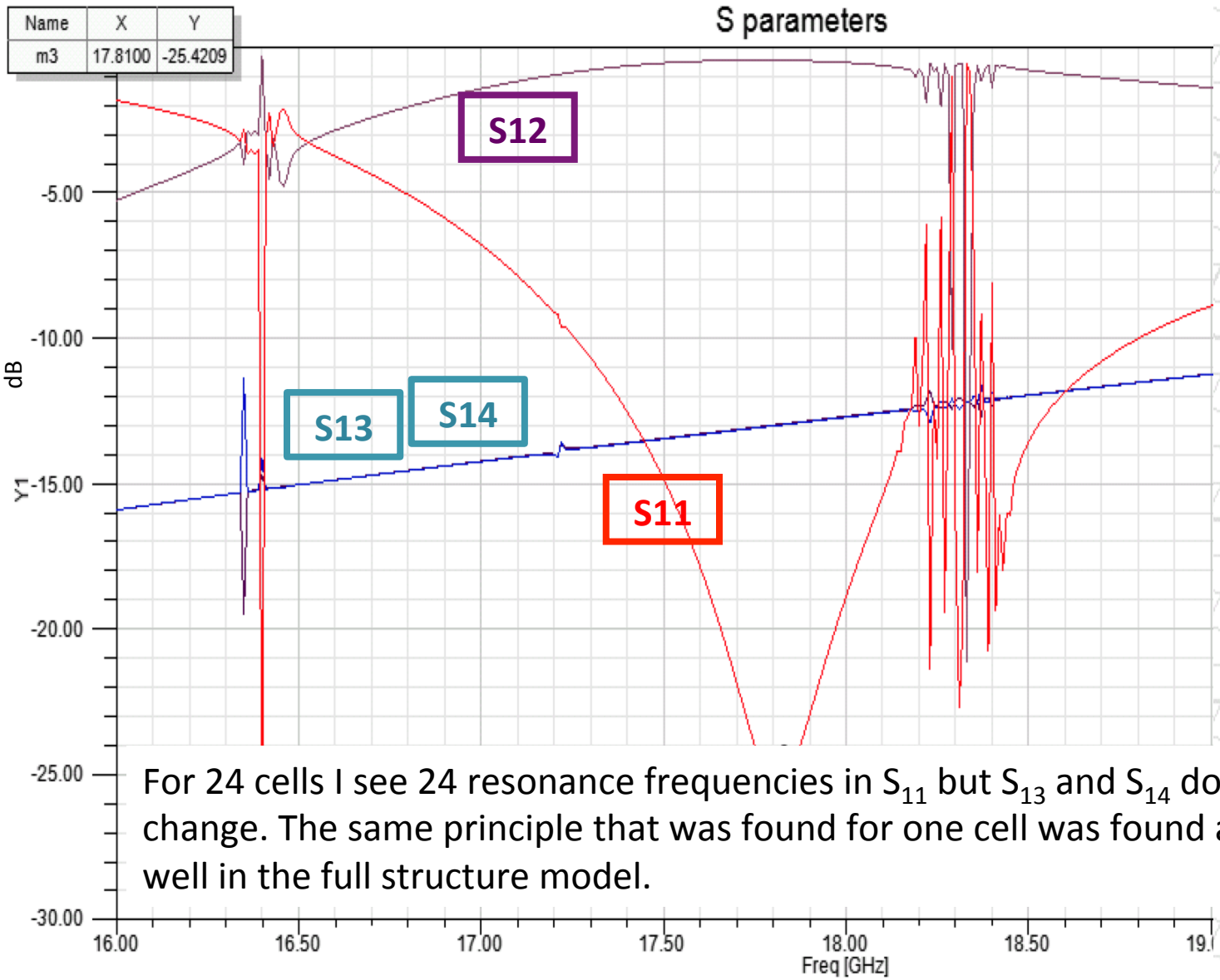

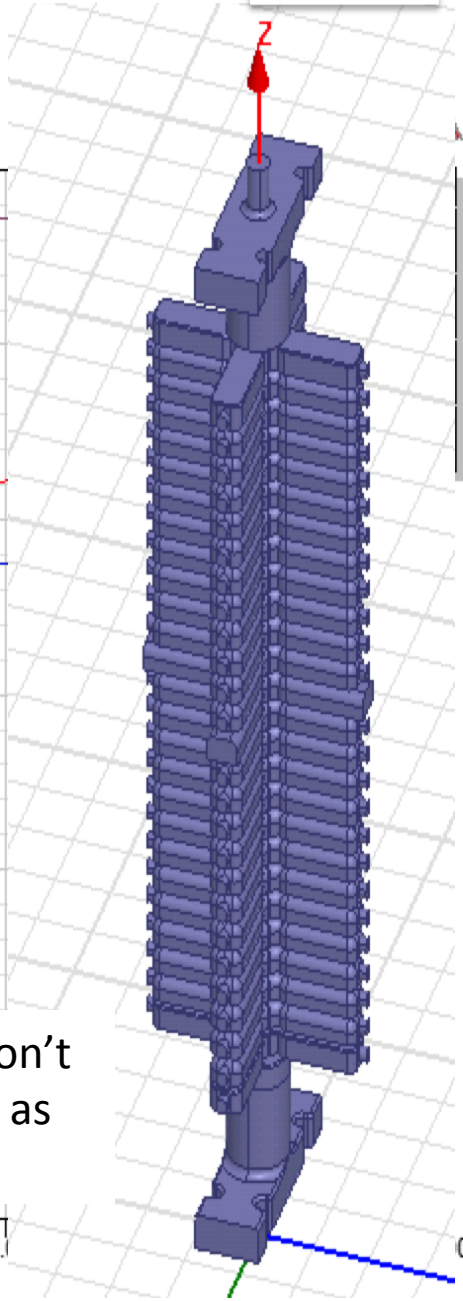

For 24 cells I see 24 resonance frequencies in S_{11} but S_{13} and S_{14} don't change. The same principle that was found for one cell was found as well in the full structure model.

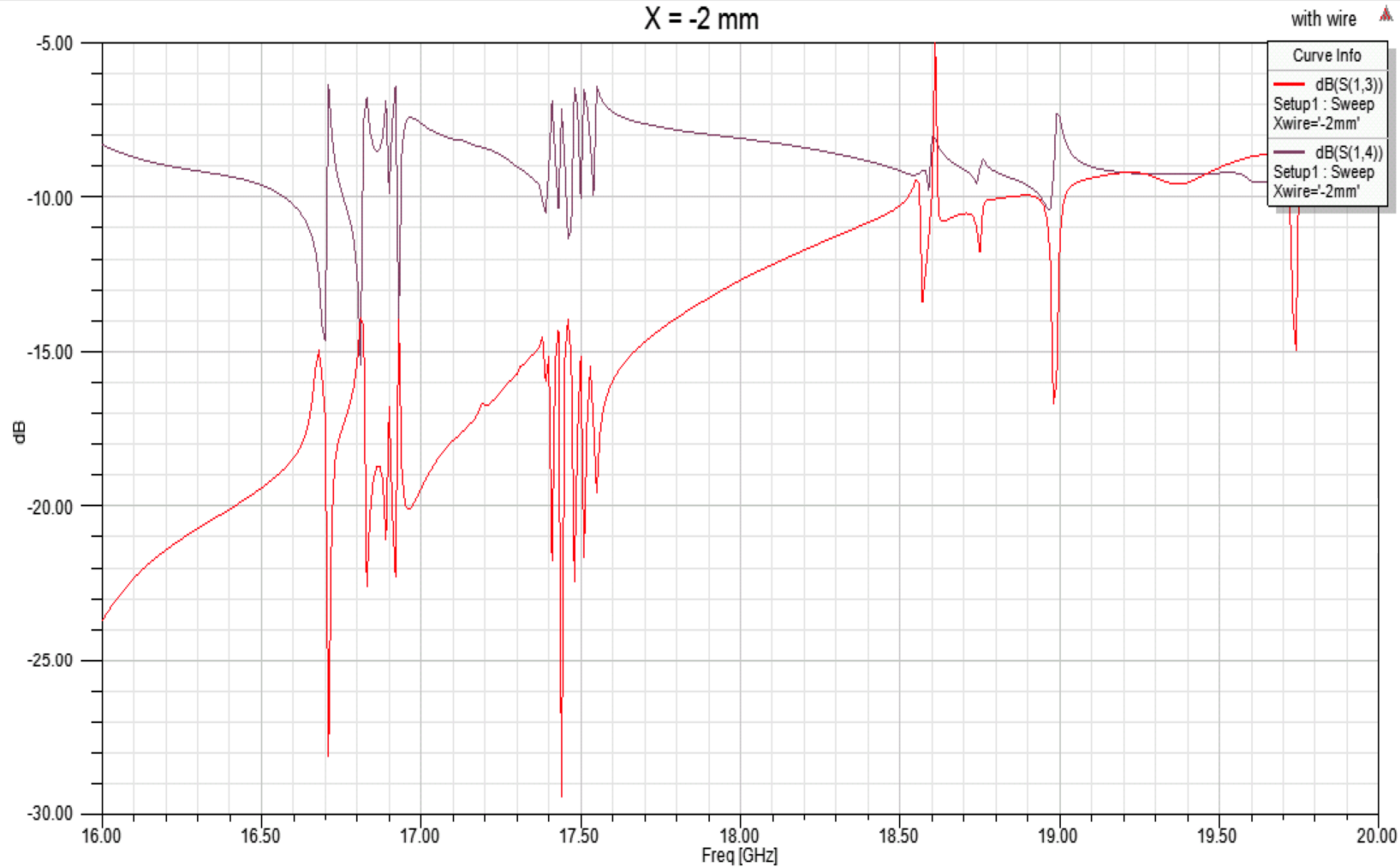
X = -2 mm
with wire
Curve Info
dB(S(1,3))
Setup1 : Sweep
Xwire='-2mm'
dB(S(1,4))
Setup1 : Sweep
Xwire='-2mm'
-5.00
-10.00
-15.00
-20.00
-25.00
-30.00
dB
16.00
16.50
17.00
17.50
18.00
18.50
19.00
19.50
20.00
Freq [GHz]

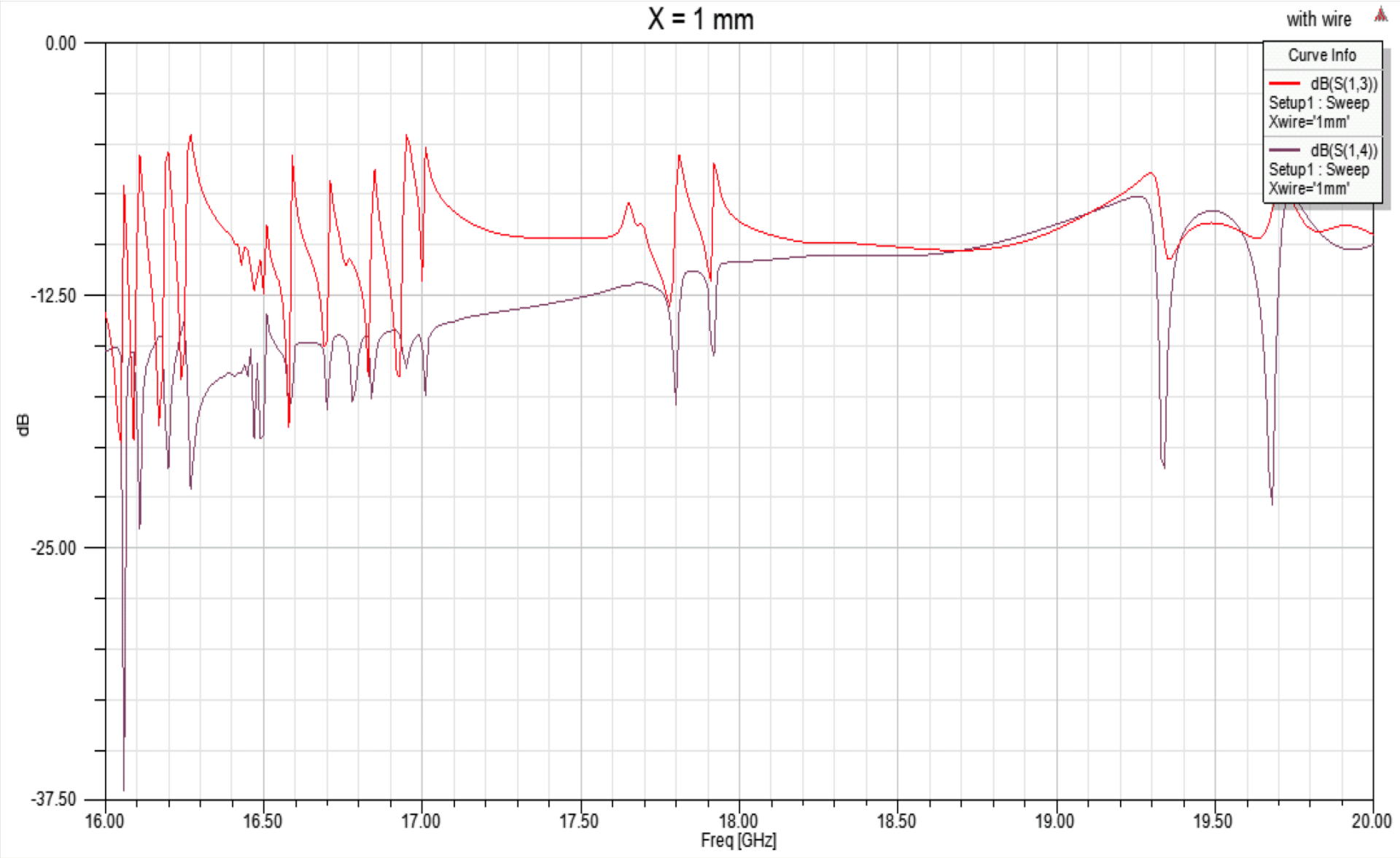
X = 1 mm
with wire
Curve Info
dB(S(1,3))
Setup1 : Sweep
Xwire='1mm'
dB(S(1,4))
Setup1 : Sweep
Xwire='1mm'
0.00
-12.50
-25.00
-37.50
dB
16.00
16.50
17.00
17.50
18.00
18.50
19.00
19.50
20.00
Freq [GHz]

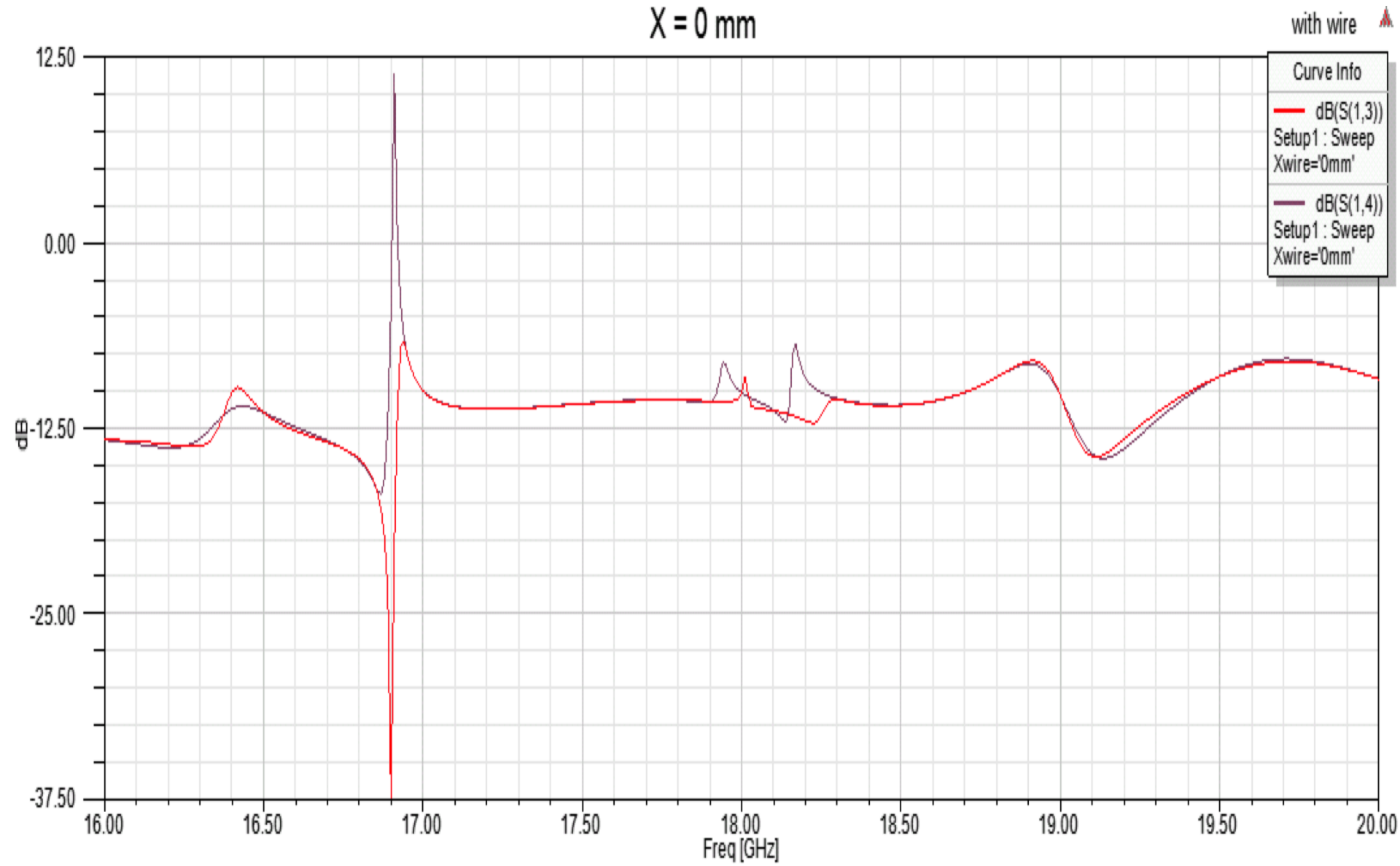
X = 0 mm
with wire
Curve Info
dB(S(1,3))
Setup1 : Sweep
Xwire='0mm'
dB(S(1,4))
Setup1 : Sweep
Xwire='0mm'
12.50
0.00
-12.50
-25.00
-37.50
dB
16.00
16.50
17.00
17.50
18.00
18.50
19.00
19.50
20.00
Freq [GHz]

Conclusions

- The study of the Scattering parameters in the middle cell of the RF structure when a wire perturbs the electromagnetic fields inside would allow me to determine the electromagnetic center of the AS with the micrometer resolution required for the CLIC project.
- More simulation work will be done in the following days in order to determine the S parameters change when a conductor wire is off-centered in all axes and the structure is tilted.
- The first measurements will be done hopefully in March 2015 once the taper needed has been manufactured.
- More laboratory measurements will be done once all the components of the test bench have been fabricated.
- The next stages of the research depend on these laboratory results.
- The method 2 will be done in the laboratory using the WFM.
- The idea of measuring the internal misalignment between irises is still under investigation.

Thank you for your attention!

And thank you to those who give me your feedback everyday!

Nuria Catalan Lasheras, Alexej Grudiev, Walter Wuensch, Manfred Wendt, Silvia Zorzetti, Anastasiya Solodko,…