UNIVERSITÄT BERN

AEC
ALBERT EINSTEIN CENTER
FOR FUNDAMENTAL PHYSICS

A compact silicon based PET detector with ATLAS phase-II like sensors

Alberto Cervelli
Universität Bern
On Behalf of PET-TT Project team

PET/MRI combined devices

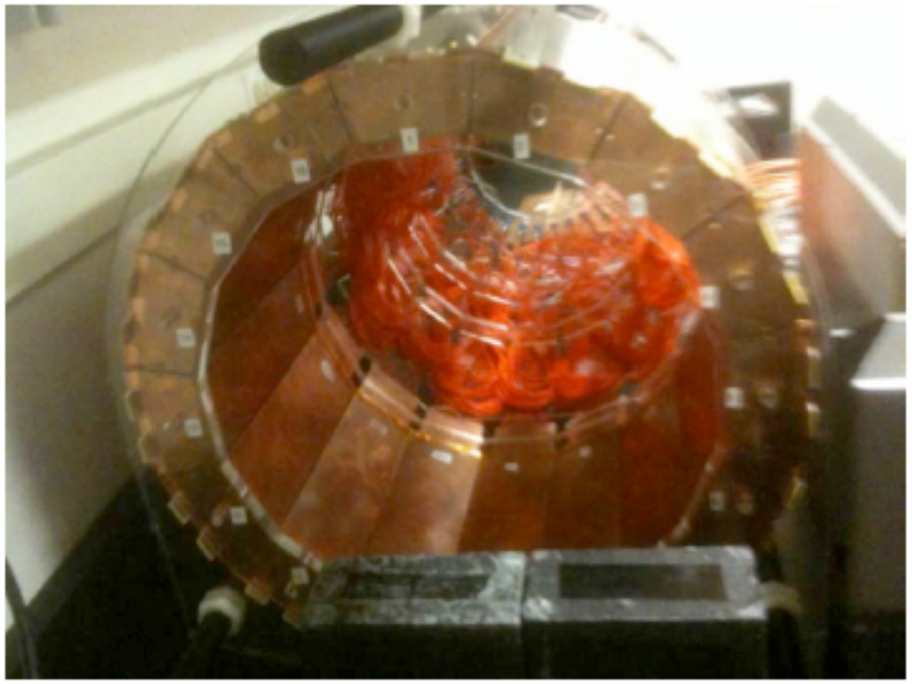

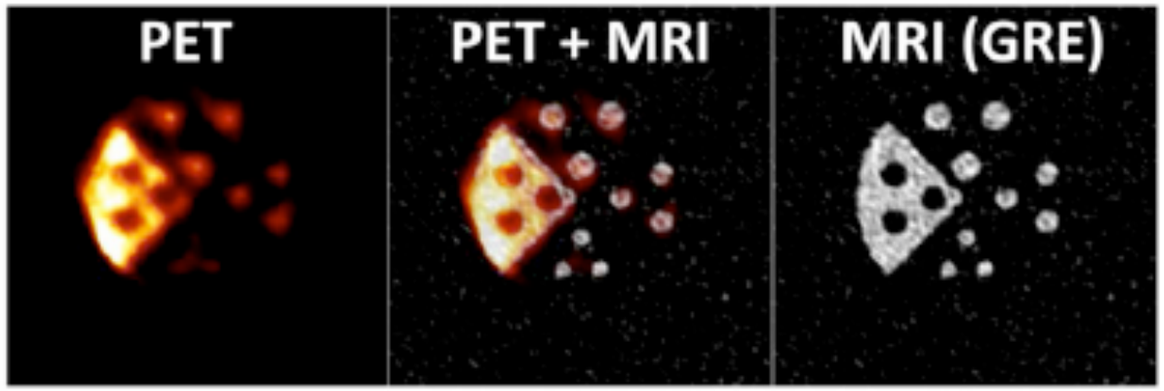

PET and MRI are two of the most important imaging test for the diagnosis many ailments.

PET offer a "molecular" imaging of the body, highlighting the metabolic processes inside the observed organs

MRI provide a "structural" imaging of the same targets

Today the combined devices are bulky and extremely expensive.

The goal of the PET-TT project is to provide a cheap, small, and portable device for PET scan which can be easily coupled to the present day commercial MRI scanners

Thin PET for PET/MRI

UNIVERSITÄT BERN
AEC ALBERT EINSTEIN CENTER FOR FUNDAMENTAL PHYSICS

Compact PET devices will make it possible to have a PET scan with resolutions of <4mm with bore holes with diameter <50cm, present PET scans use bore holes with ~1m diameter.

The device would be portable and large enough for cerebral PET scans

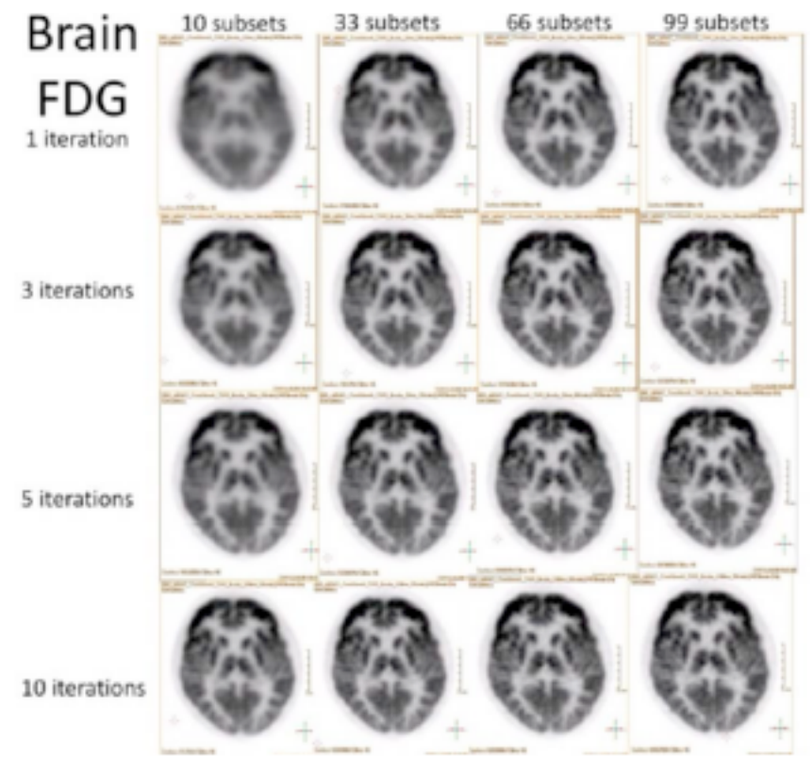

Such a compact device should aim to have a good efficiency for photon detection, and have a stable performance over a wide range of magnetic field, and temperature values.

Silicon detectors provide a good solution to both challenges

Present PET devices

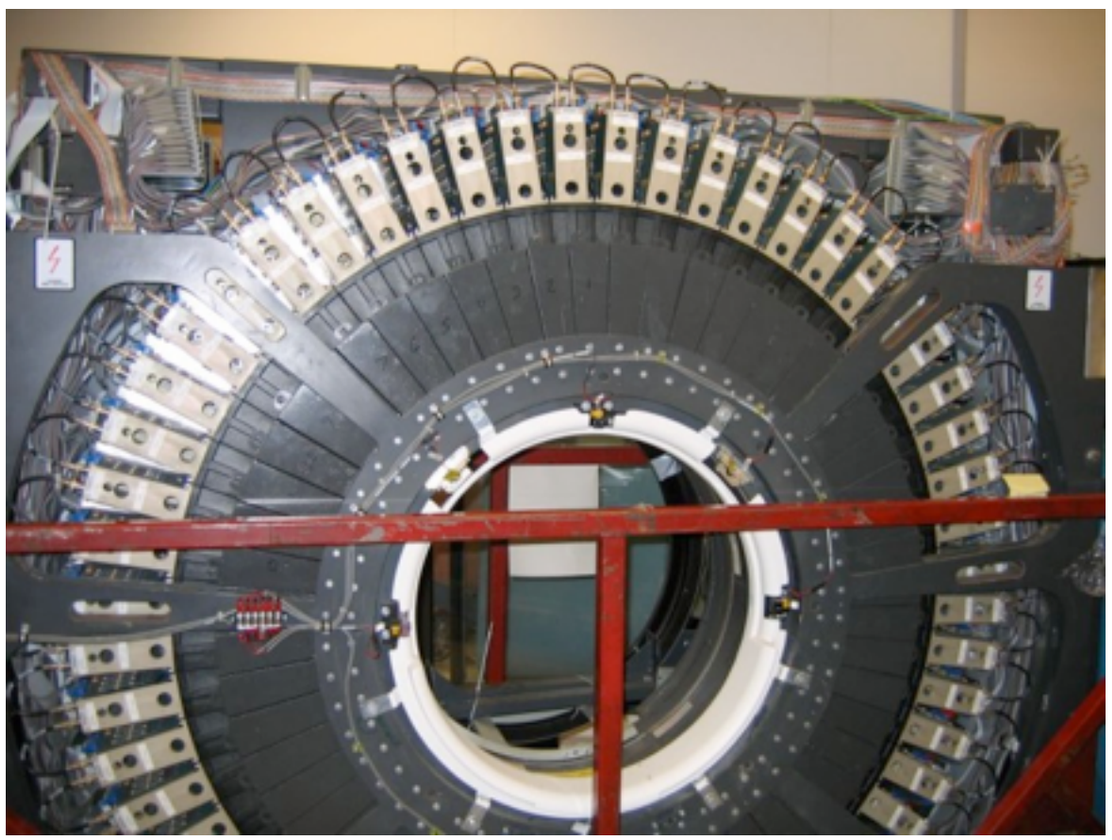

Most of the commercial PET devices are based on Crystals for photon detection.

Most modern ones uses LYSO crystals, which can obtain a 0.5-1mm resolution on the productionof photon pairs over a flight path of ~50 cm

A large background is expected for single electrons, and imaging require a large processing time for background subtraction

APD used for readout offer an efficiency of ~10%

Due to the crystal and APD performance the performance stability is not optimal, in particular if coupled with other scans

TOF PET

UNIVERSITÄT BERN
AEC ALBERT EINSTEIN CENTER FOR FUNDAMENTAL PHYSICS

TOF PET provide a great spatial resolution with small bore holes.

Now a 600ps resolution TOF has been achieved, corresponding to 9cm resolution.

Goal for a <100ps (30ps) resolution which would match PET resolutions

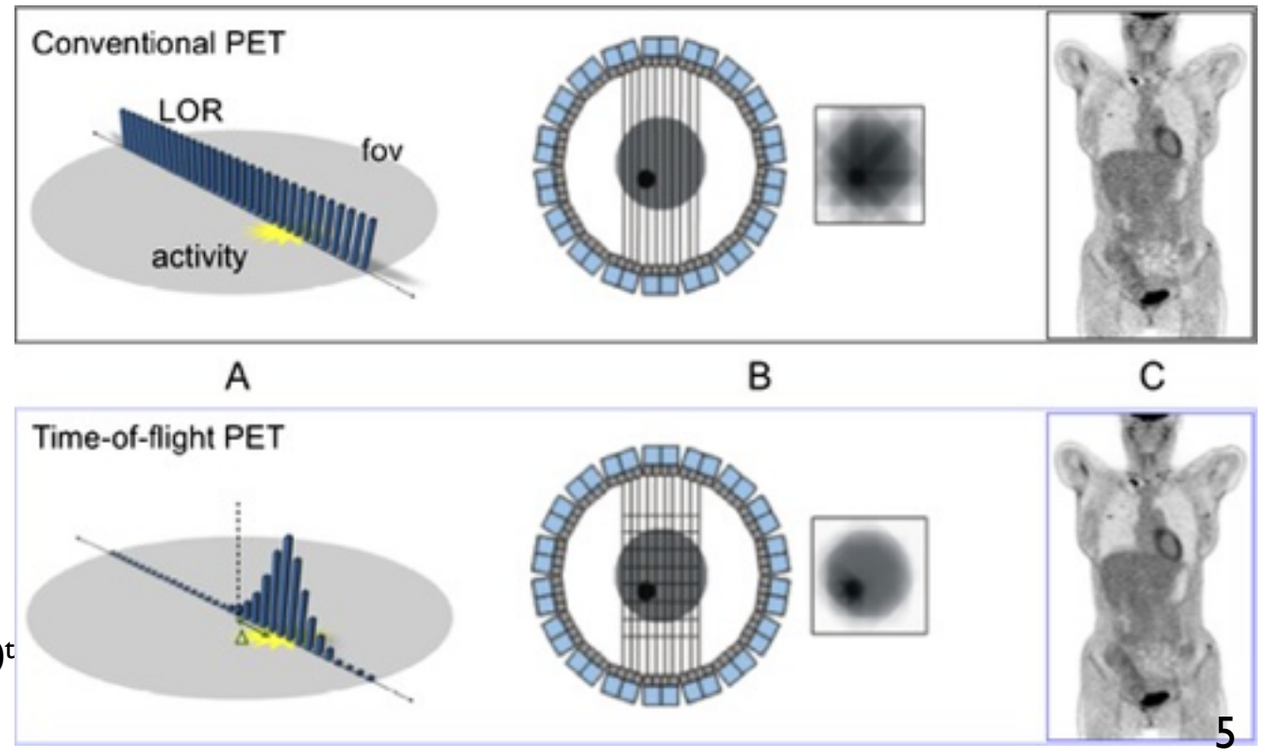

A PET-TOF offers an intrinsic 3D imaging of the body.

The main requirements for the detector are:

- High detector Granularity, Si detector pixel 1x1.2x0.2mm Vs LYSO 4x4x20mm
- High photon conversion detection to reduce statistical backgrounds
- Small readout time to reduce fake coincidences and increase the time resolution of the single hits

Alberto Cervelli
Universität Bern

Detector Layout

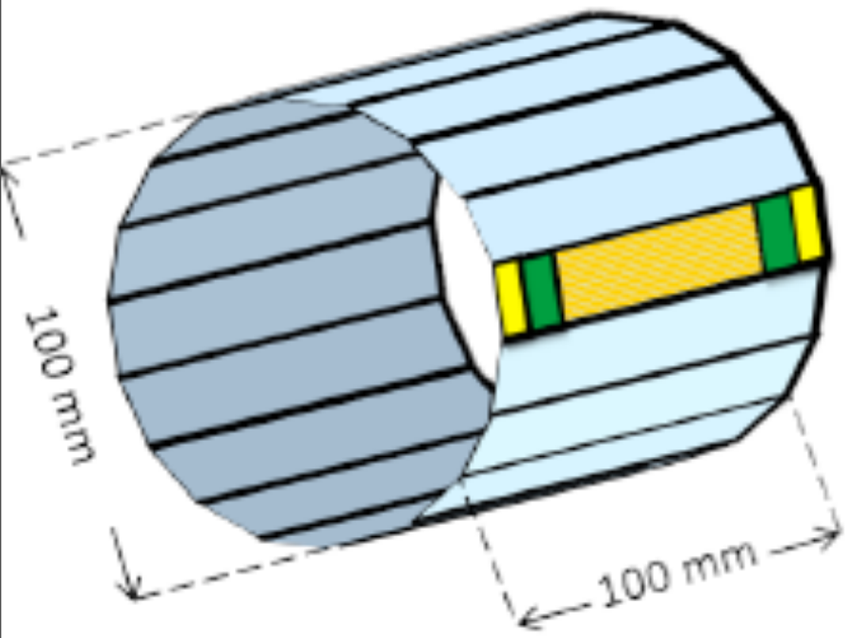

The prototype will be designed for small animals, with a bore hole of 100mm. It will present 32 rectangular Cells made of stacked Stations.

Each Cell is read out on both sides.

The stations are built by stacking an ATLAS like FE chip bonded to a silicon sensor, an high Z converter, and a small SiO_2 electron absorber

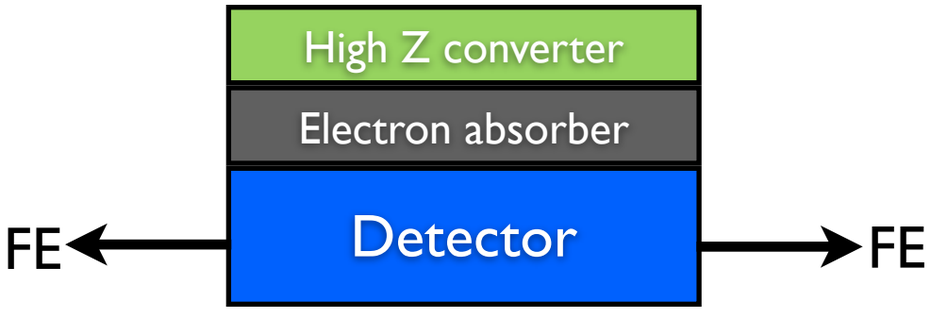

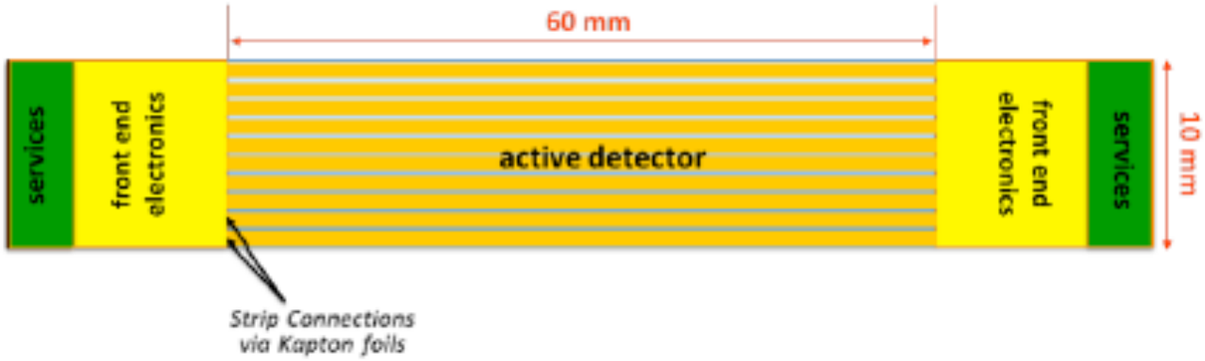

Active Sensor requirements

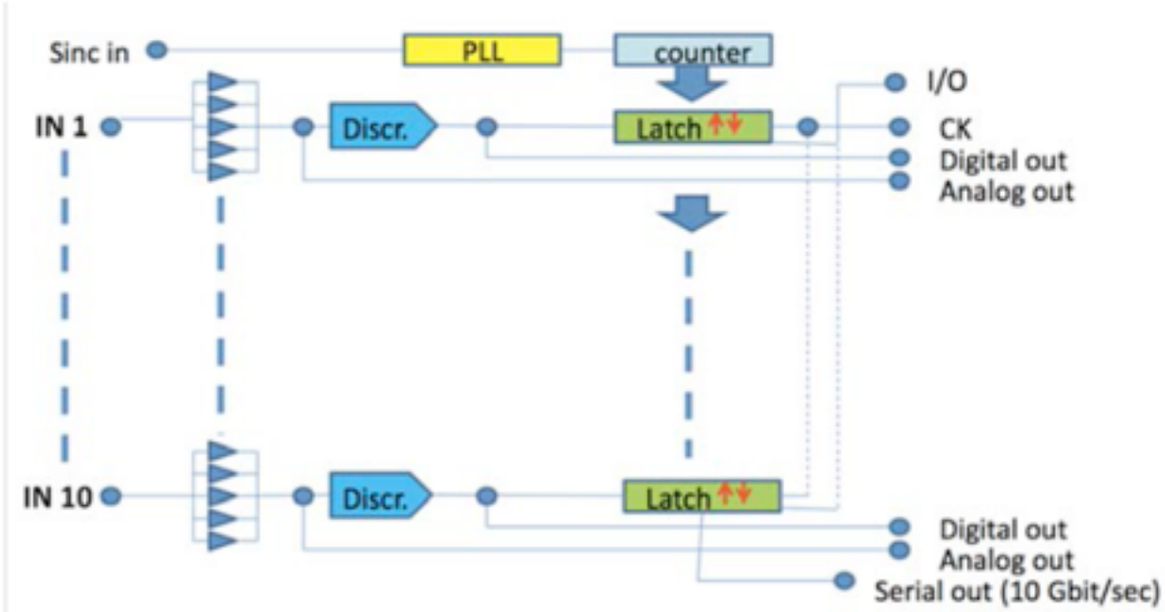

Each sensor will be read out through a line composed of a preamplifier and a discriminator providing both a digital and analog output

The active detector will be based on HV-Cmos technology, and will share the development with the ATLAS inner detector phase-II upgrade.

The Front end requirements have 3 challenges:

- Need a fast discriminator
- Good digital/analog coupling to reduce electronic noise
- PLL sync need to be good for better time resolution

Off-detector Architecture

The off-detector system constitutes the link between the detector and the reconstruction system

It will be based on two different boards optically coupled.

Each PCB pair will serve one side of a cell, so a total of 64 PCB pairs will be needed for the prototype

The off-detector system will provide:

- A fast readout and storage of the raw data coming from the cells of the PET-TOF
- the HV lines for the silicon detectors
- the LV lines for the FE sensors
- the clock to the full system

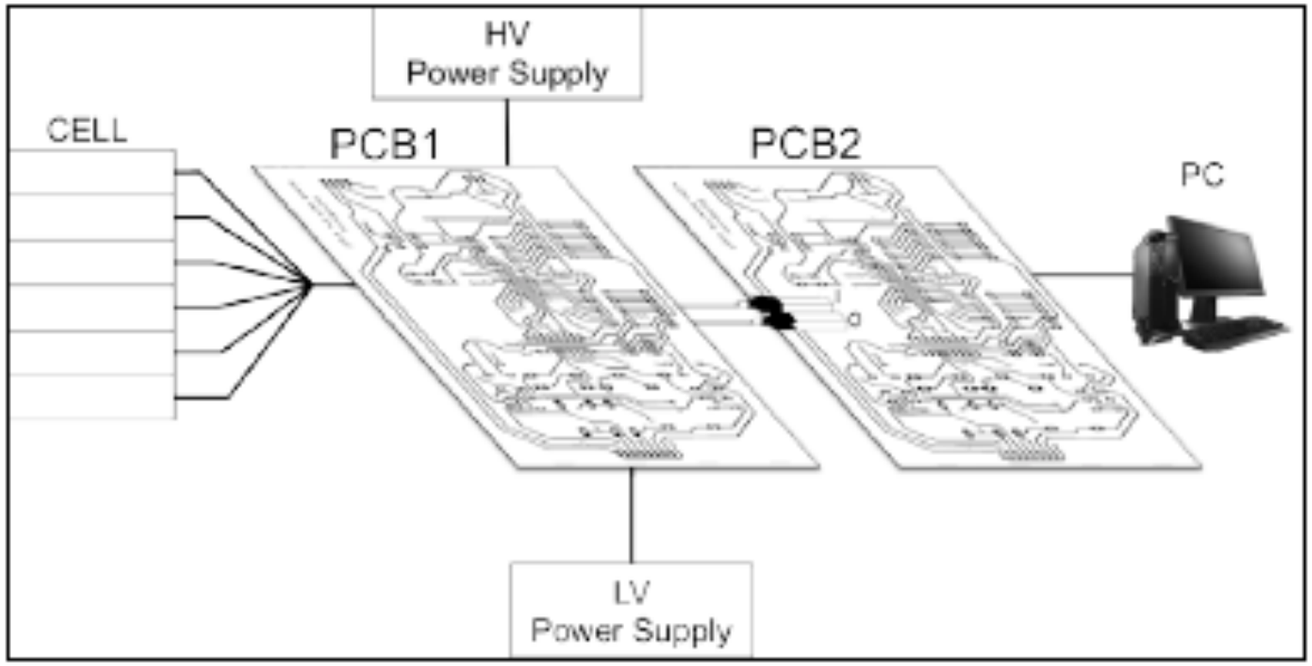

Off Detector PCB1

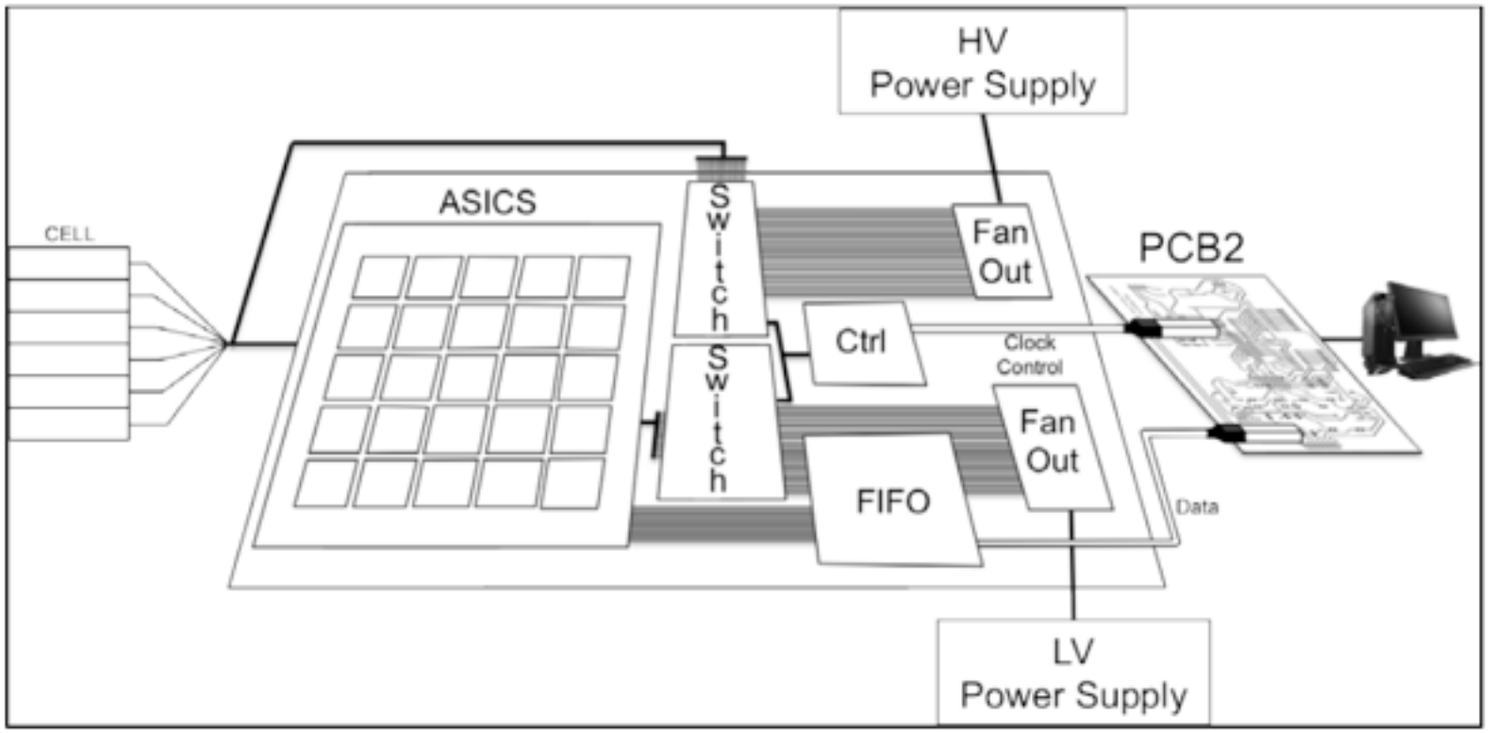

PCB1 is directly linked to the FE through an ASIC array. LV and HV are provided through commercial PS.
To avoid damage due to shorts, and to mask out faulty ASIC power switch will be implemented on the board.
The data stream coming out of the ASIC array is stored in a FIFO memory linked to the PCB2 and eventually to the offline system
Slow Control is provided from PCB2 and operated through a commercial Processor
Clock will be fed by PCB2 at 50MHz and multiplied through ASICs PLL to 50GHz

Off Detector PCB2

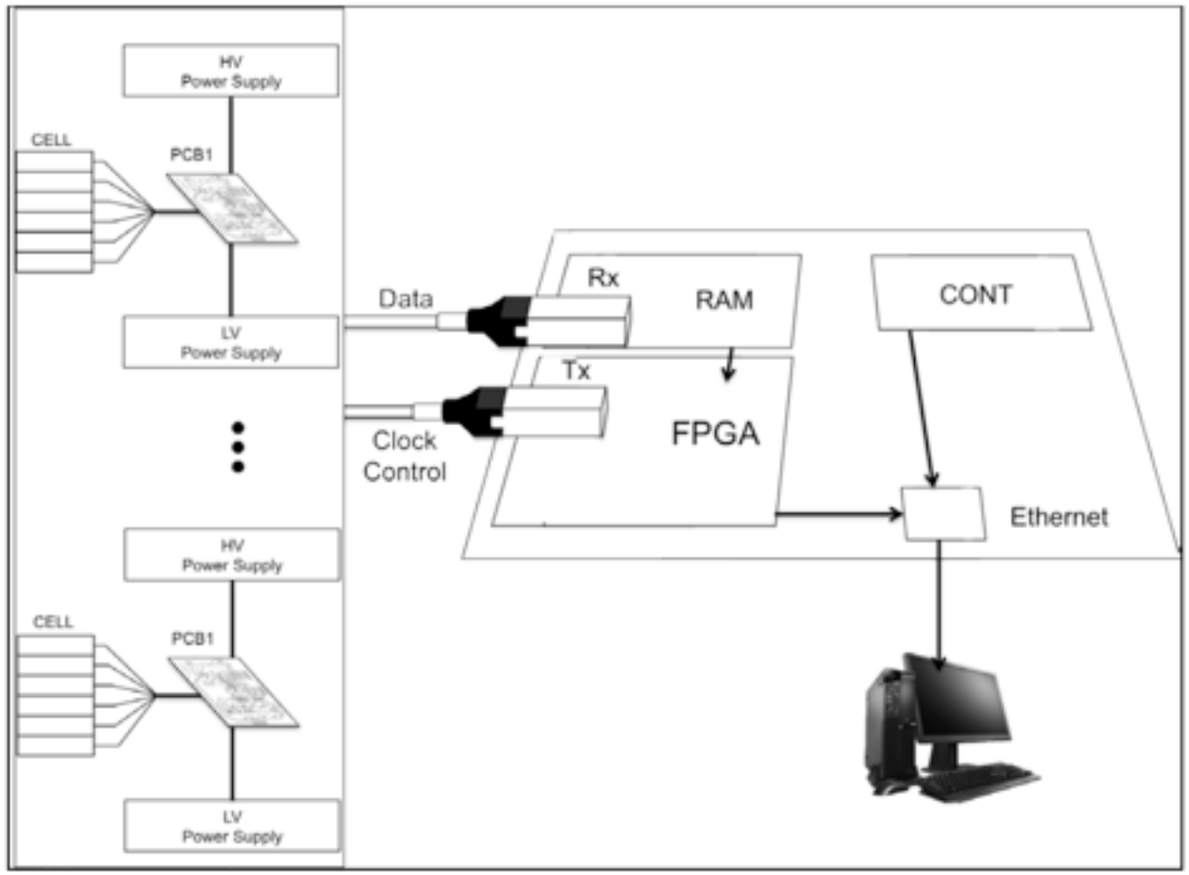

Slow Control will be placed in PCB2.

Slow Control will be fed to PCB1 through a ribboned fiber optic link, operated by a Xilinx spartan 6 FPGA driven by a MicroBlaze processor

The data stream is received through optical links from PCB1.

The Data will be then sent to the offline reconstruction PC-farm through an ethernet connection

Bern Cyclotron Tests

UNIVERSITÄT BERN
AEC
ALBERT EINSTEIN CENTER
FOR FUNDAMENTAL PHYSICS

The calibration of the device will be performed at Bern Cyclotron facility

Bern Cyclotron will provide both radioactive isotopes for PET scans to be tested with ghosts, and an external low energy proton source to assess damage and aging of the active sensor of the PET-TOF prototype

Outlook

UNIVERSITÄT BERN
AEC
ALBERT EINSTEIN CENTER FOR FUNDAMENTAL PHYSICS

- The PET-TT project, composed of University of Bern, University of Geneve, and University Hospital of Geneve will produce a PET-TOF prototype in 3 years time
- The compact PET-TOF prototype is meant to be used in PET/MRI combined scans
- The technology to be developed will profit from the parallel R&D for ATLAS pixel sensors and their FE chips
- The experience of the institutions involved in building the IBL detector and upgrading the optical readout will have direct impact in the PET-TOF construction capabilities