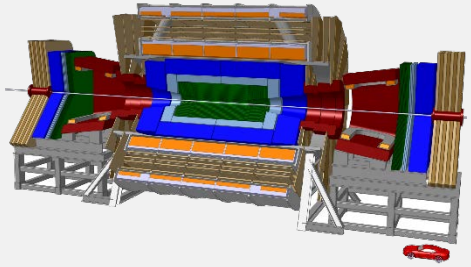

Detector Magnets

for the 100 TeV Future Circular p-p Collider (FCC-hh)

Herman ten Kate

Alexey Dudarev, Matthias Mentink, Helder da Silva, Gabriella Rolando

1. LHC and FCC
2. Physics requirements and design drivers
3. Magnet layout options
4. Scaling of cost of magnets and their services
5. Installation in cavern
6. Future work and R&D issues
7. Conclusion

CEC-ICMC 2015 @ Tucson, June 30, 2015

1. LHC, detectors and their magnets ---> Higgs

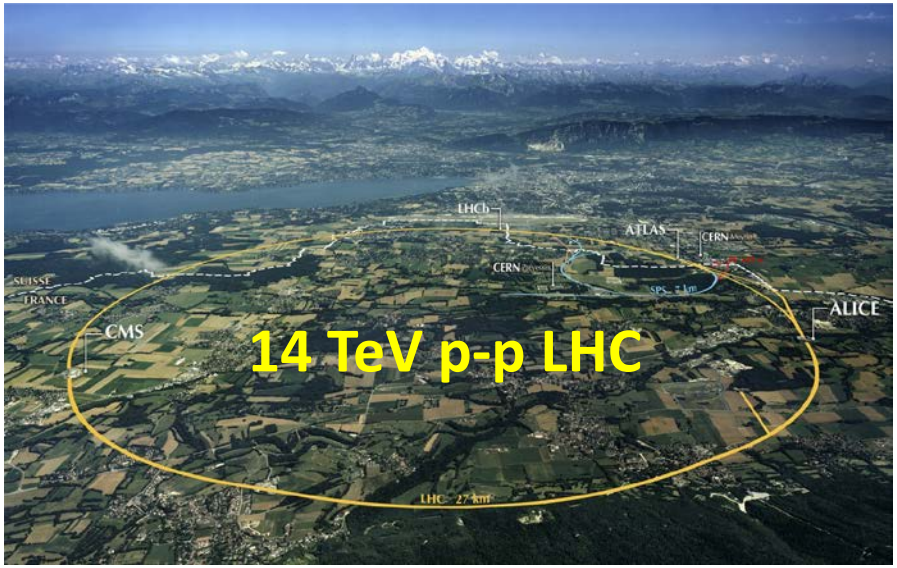

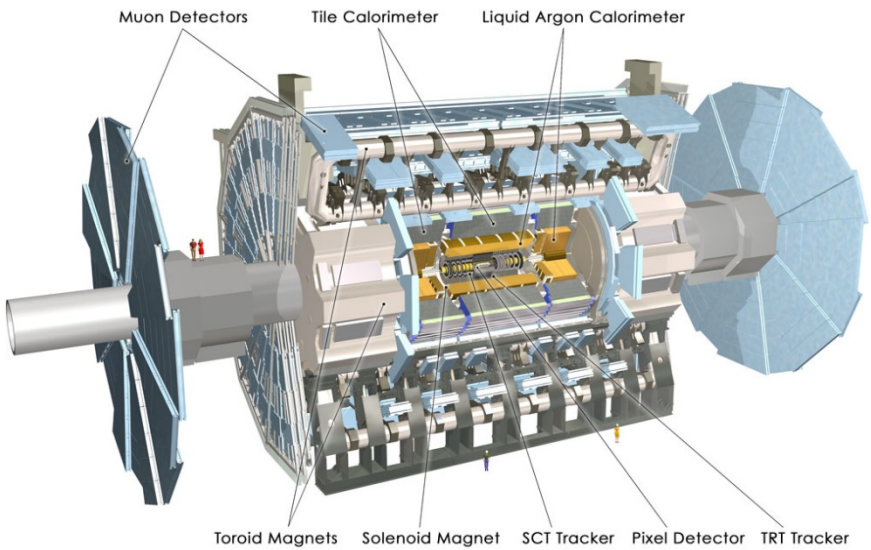

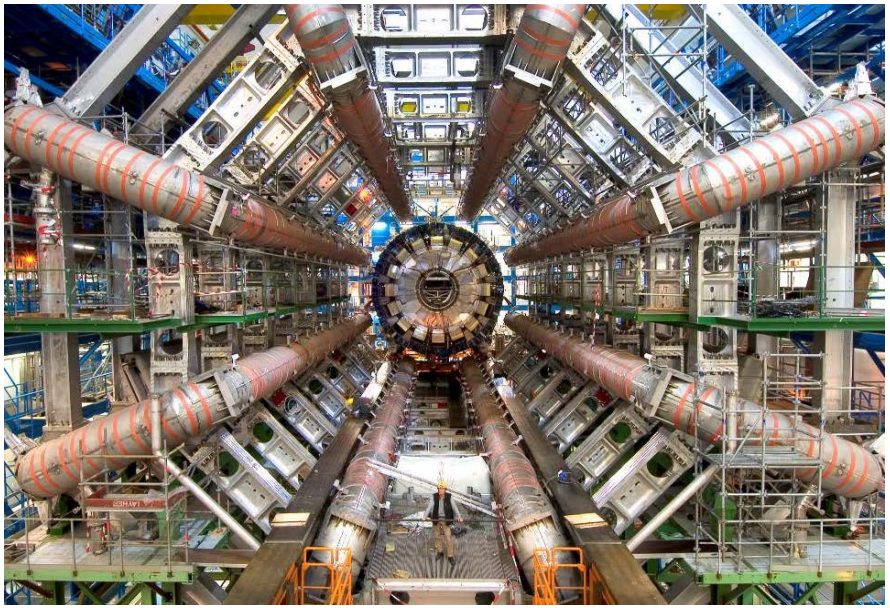

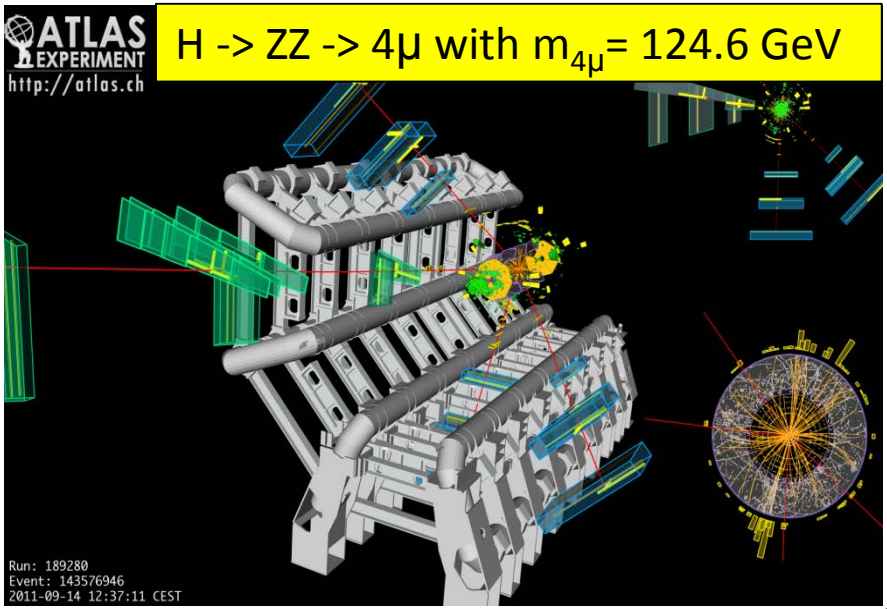

Options for 100 TeV colliding energy

Energy = 0.3 x B x R

B: 1.9 x from NbTi to Nb_3Sn
B: 2.4 x from NbTi to HTS
R: 4-5 x more magnets

- New ≈100 km tunnel in Geneva area
- pp-collider (VHE-LHC) defining the size
- Options for adding an e+e collider (TLEP) pe collider (VLHeC)
- New CERN-hosted study with international collaboration.

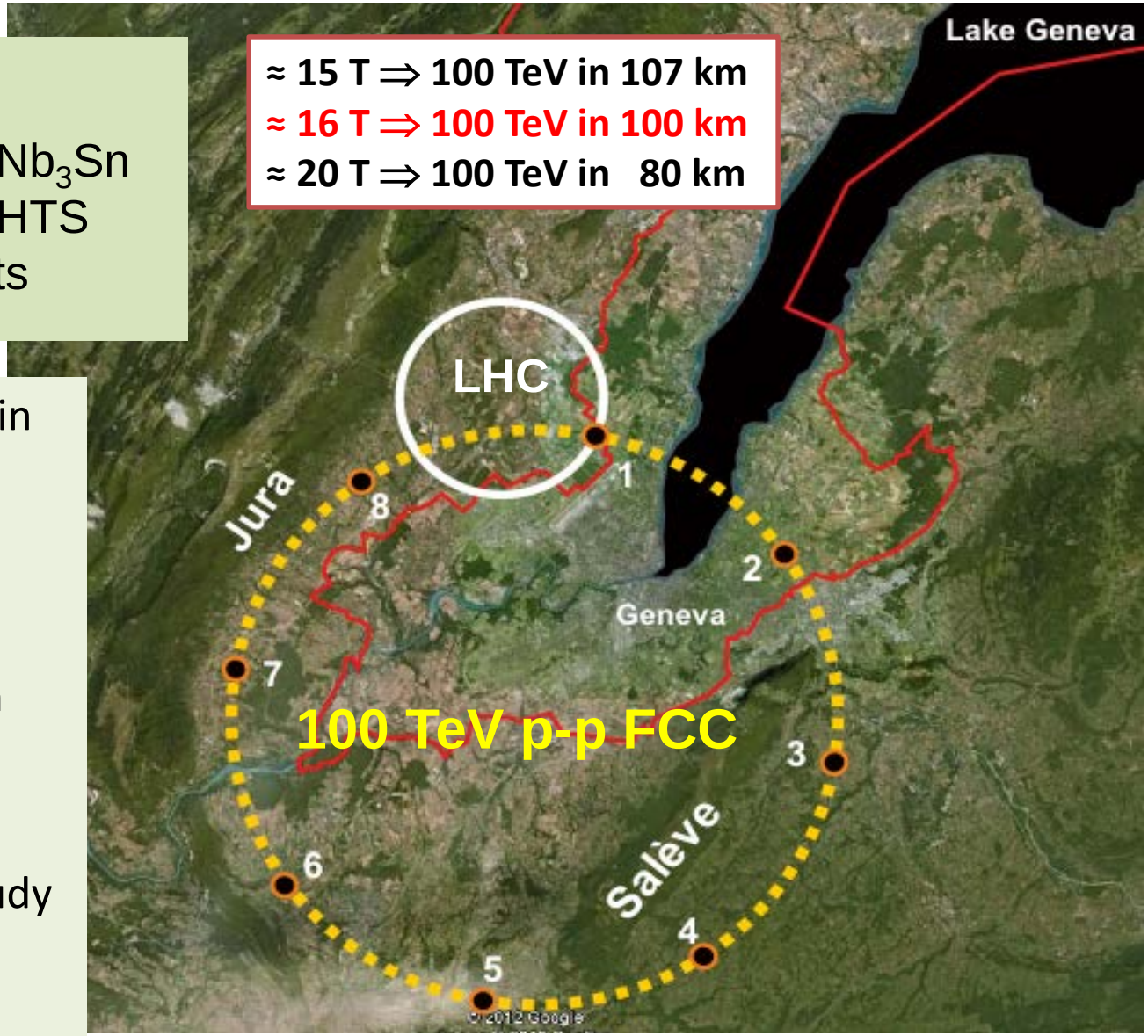

Outcome of LHC and finding new physics

Main outcome of LHC – Run 1 at 7-8 TeV:

- Standard Model consolidated and it works beautifully…
- Standard Model completed with the Higgs boson discovery (a 100 years effort!)
- No-evidence (yet) of new physics….

If new physics pops-up in LHC - Run 2 at 13-14 TeV, then spectrum is heavy:

- Need much more energy and luminosity to explore.
- Since a new machine from concept to collisions takes easily 30 years we have started now.

- This future 100 TeV pp collider is an extremely challenging project.
- It is one of the few options for the future of this research.
- ✓ The options shall be explored……

It easily takes 30 years time……. start now!

*"CERN should undertake design studies for accelerator projects in a global context, with emphasis on **proton-proton** and electron- positron **high-energy frontier machines."***

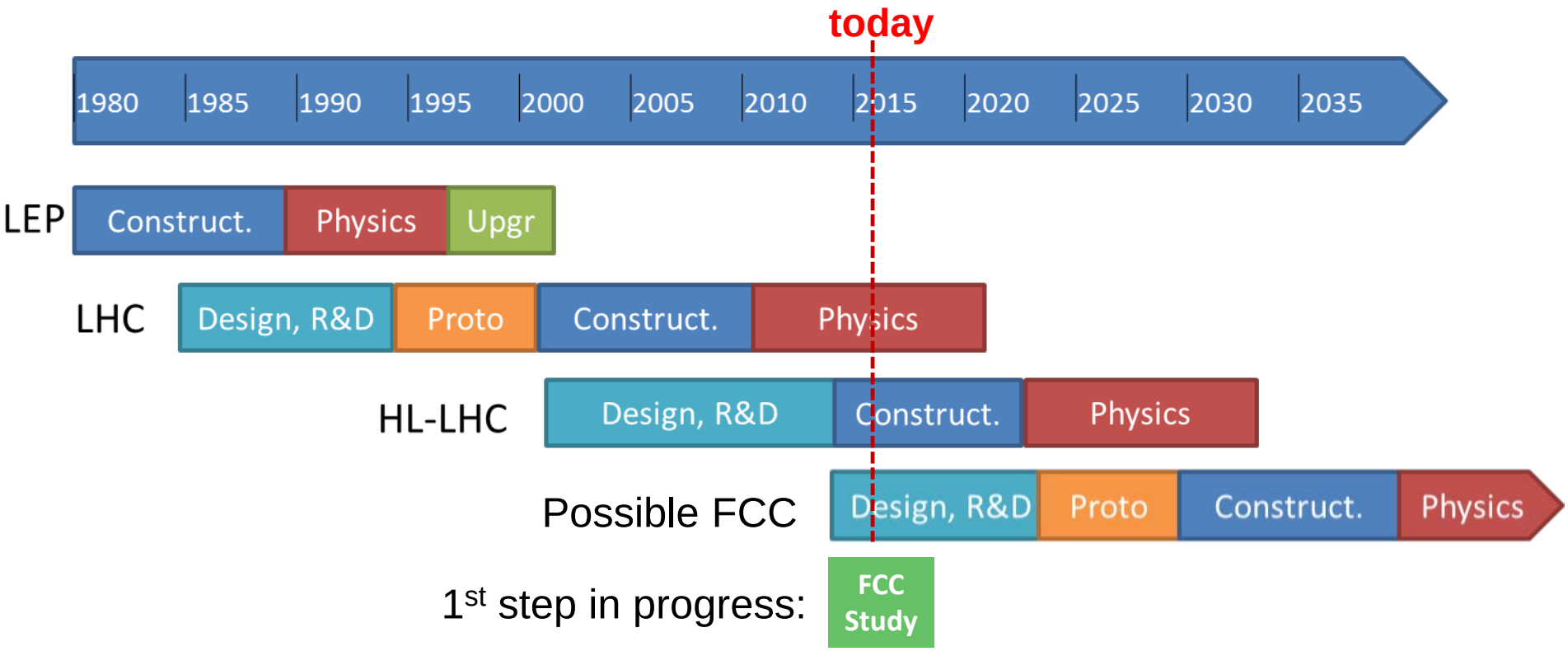

FCC Study: p-p machine to achieve 100 TeV, **CDR & Cost Review in 2018**

2. Design drivers for detector magnets - sizing

Two arguments determining the minimum radii of the detectors:

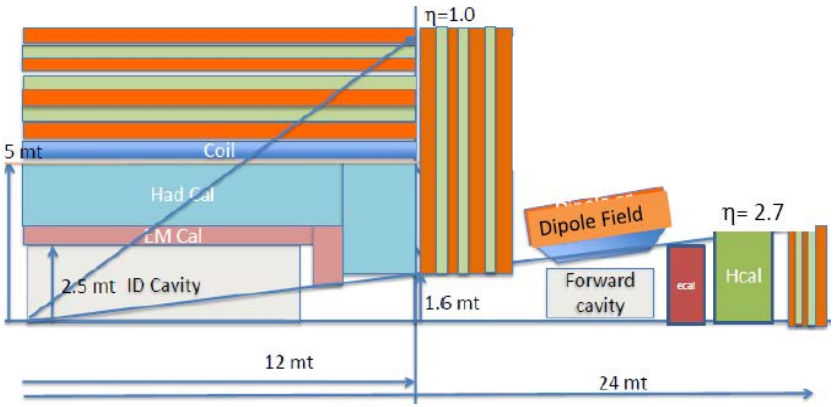

1. Bending power in inner detector tracker and muon system:

- 7 times higher collision energy, 14 > 100 TeV, but same tracking resolution
- Sagitta of charged particles in magnetic field $B \propto B.L^2$
- and momentum resolution $\propto \sigma/BL^2$

Thus **BL^2/σ to be increased by a factor 7 !**

$$\frac{\sigma(p_T)}{p_T} = \frac{\sigma(\kappa)}{\kappa} = \frac{\sigma_x \cdot p_T}{0.3BL^2}\sqrt{\frac{720}{(N+4)}}$$

- Try combination of higher point resolution, higher field and increase of radius.

For detector solenoids this means:

- Scale up magnetic field from 3.5 up to 5 or 6 T and increase bore size.

Design drivers for detector magnets - sizing

2. Calorimeters need minimum depth to stop all particles except muons.

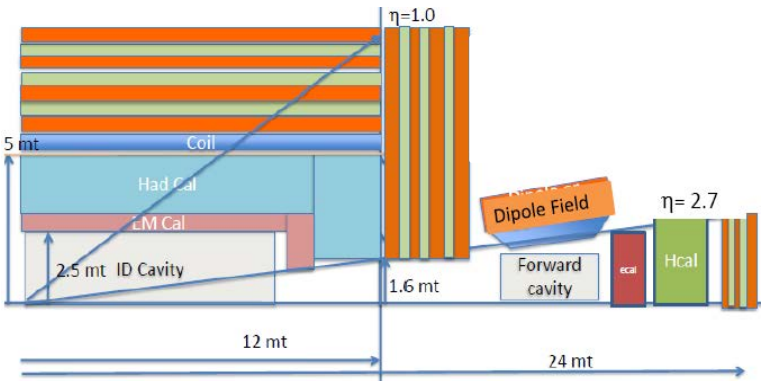

Increase radial thickness from 10 to 12λ!

- Based on steel absorbers(with tungsten eventually less, but expensive)
- With 0.6 m deep ECAL + 2.2 m deep HCAL we see a total radial build of 3.4 m.
- For an inner tracker diameter of 3, 4 or 5 m (depending on field and tracker point resolution anticipated), the bore of the solenoid or toroid, when calorimeters are inside, is in the range of 10.0 to 12.0 m!
- And the length scales accordingly.

Three arguments determining the length of the system:

1. Coverage in forward direction, in central magnet up to 23°

Length of solenoid is 3.84xR , L=R/tan (23°): 10 m bore, means 19 m long

12 m bore, means 23 m long.

Design drivers for detector magnets - sizing

2. Extra forward tracker and ECAL to cover low angles

- Move unit out, from 5 to some 15 m, but the system gets longer!

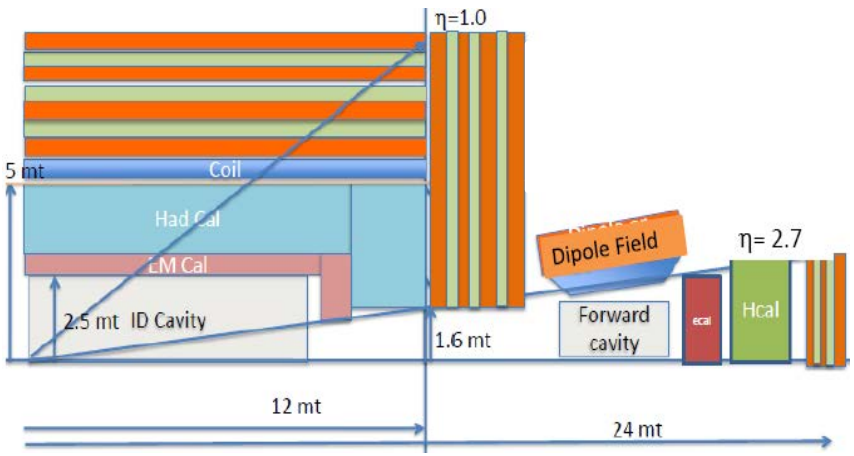

✓ Overall detector length 60-80m!

3. Low angle coverage, η>2.7 (7.7°) with 10 Tm in forward direction

- Solenoid is useless here.
- High field toroid difficult, since all current has to pass the small inner bore close to the beam pipe.

Options:

- Add a dipole (like in LHCb detector) for on-beam bending featuring 10 Tm.
- Or invent another solution, may be a low field toroid.

❖ **Note: presented here are maximum system sizes; for cost or technical reasons they may be scaled down a bit later on in the process……**

3. Option 1: Solenoid-Yoke + Dipoles (CMS+)

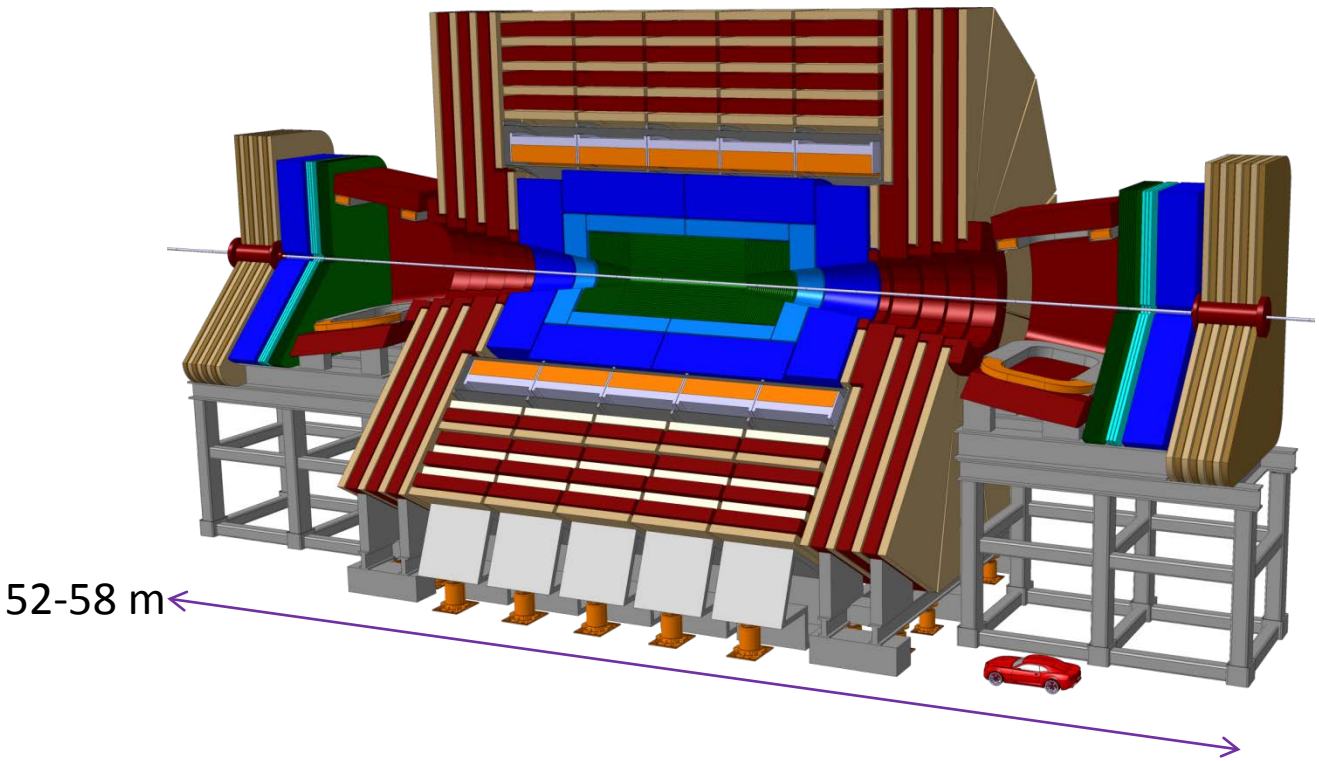

- **Solenoid:** 10-12 m diameter, 19-23 m long, respectively, and 5-6 T + iron yoke for flux shielding and muon tracking.
- **Dipoles:** 10 Tm with return yoke placed at z≈18 m. Practically no coupling between dipoles and solenoid. They can be designed independently at first.

Option 1: Solenoid – yoke size reduction

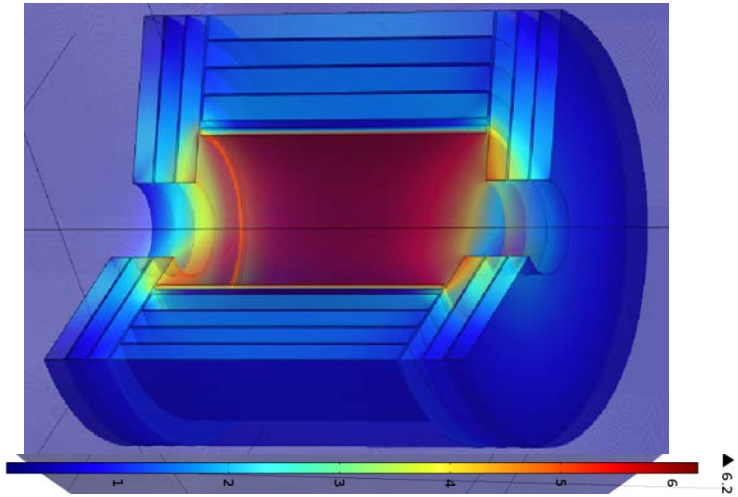

Example: 6 T, 12 m bore, 23 m long,
28 m outer diameter.

- **Stored energy 54 GJ, 6.3 T peak magnetic field.**

Yoke? Thickness depends on use of the yoke:

- **For 100% shielding we need 6.3 m thick iron**

  to get the 10 mT stray field line at 22 m

  ≈15 m^3, **mass ≈ 120 kt** (500-600 M€).

  Huge mass, serious consequences for cavern floor, installation, opening - closing system, not an elegant design.

- **For muon tagging only, yoke thickness can be limited to some 3 m**, some **60 kt** needed (still 250-300 M€).

- When not fully shielding, the fringe field has to be accepted, and/or locally be reduced by active compensation.

Option 1: Solenoid-Yoke + Dipoles

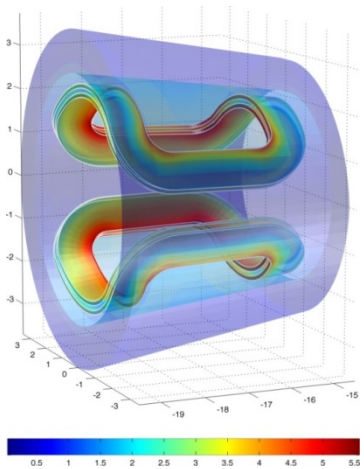

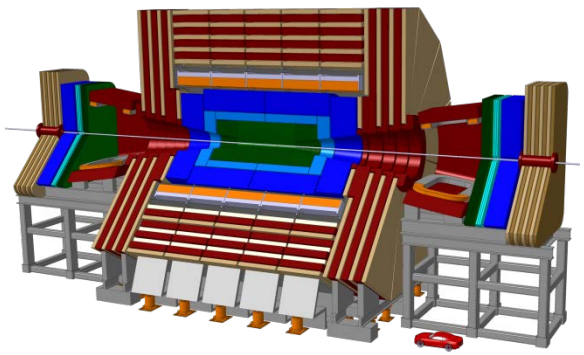

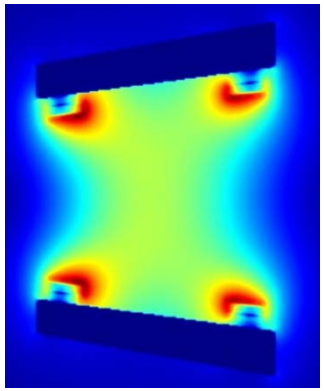

Example of 2 dipole designs, saddle coils (left) or flat racetracks (right).

- 2 dipoles, each generating ≈10 Tm.
- Designs briefly reviewed: inclined saddle coils (left) or inclined racetrack (right).
- 2.2 T in the bore, some 5.6 T in the windings (to be minimized).
- 0.2 GJ per coil.
- **Iron yoke** to guide the field and for shielding the coils.
- No iron? Find a dipole design with no coupling (see later slide).
- Also a compact toroid may be a good option to be checked.

Option 2: Twin Solenoid + Dipoles

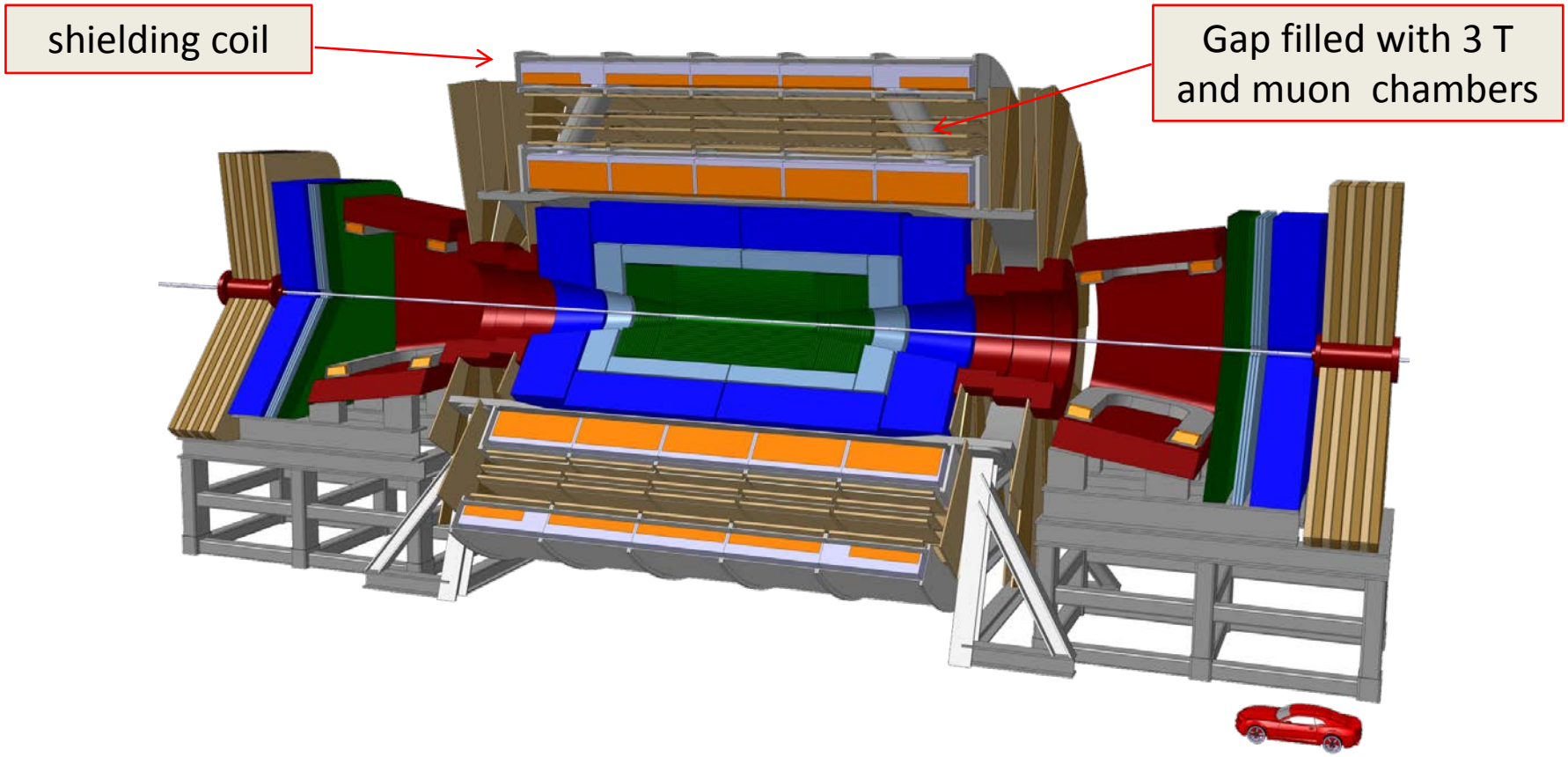

Twin Solenoid: 6 T, 12 m dia, 23 m long main solenoid + shielding coil

Important advantages:

- **Nice muon tracking space:** gap with ≈2-3 T for muon tracking in 4-5 layers.
- **Light:** shielding coil + structure ≈8 kt, much lighter than the iron yoke!

Twin Solenoid Explained - field in main coil & gap

Example: 6 T in 12 m bore, 23 m long:

- 2 to 4 T in gap depending on gap size, to be tuned.
- ≈2 T in a 6 m gap or ≈4 T in a 3 m gap.
- Many ways to adjust to specific requests.

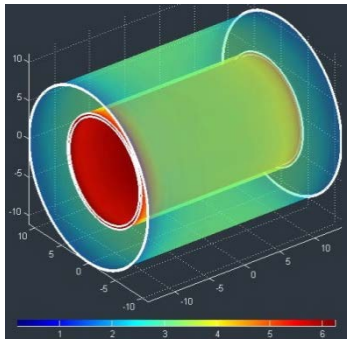

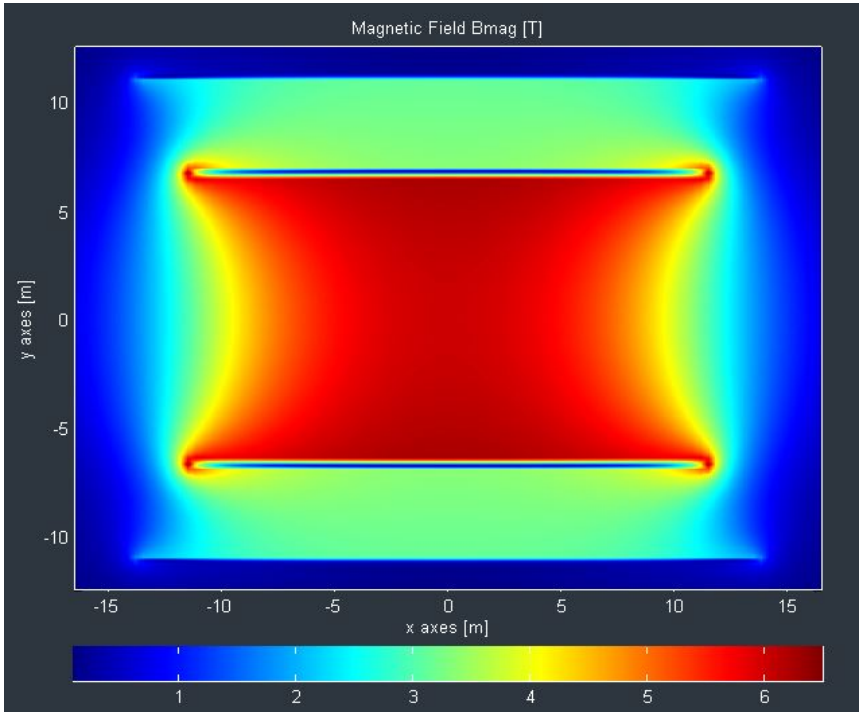

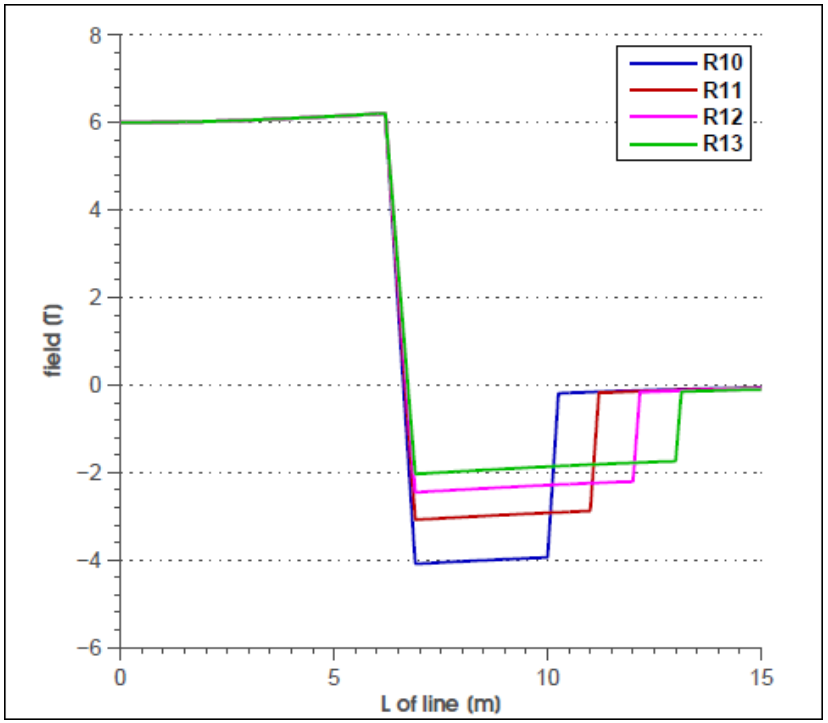

Twin Solenoid - Cold Mass Concept

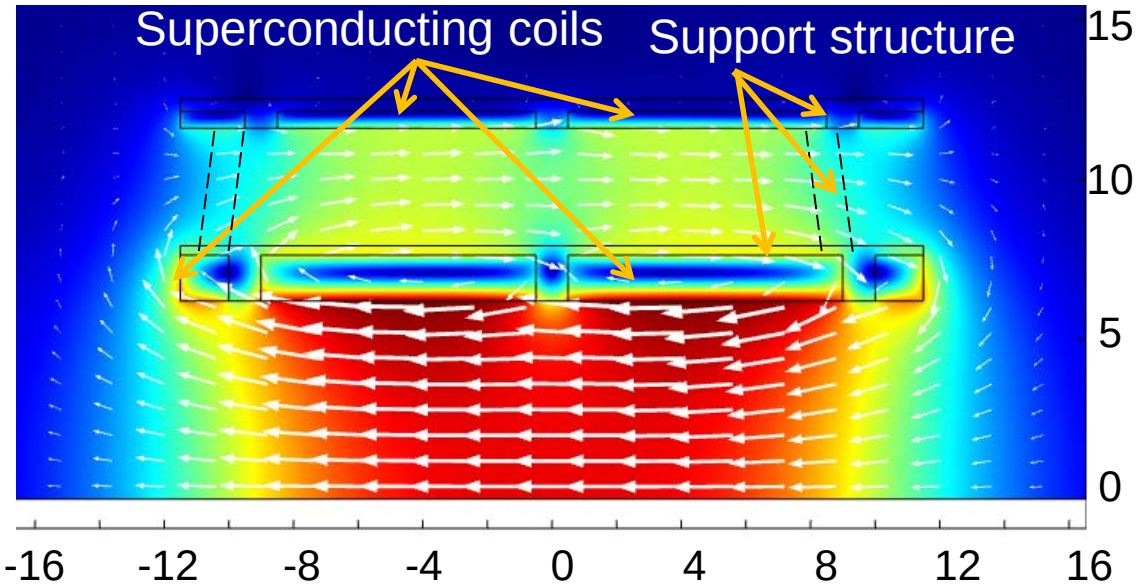

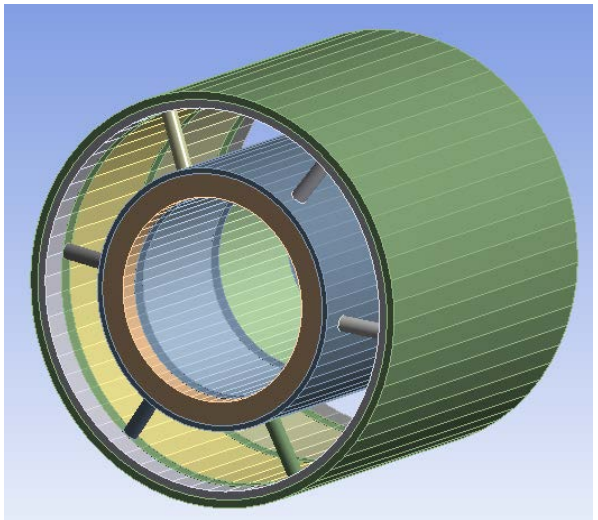

- Stored energy 54 GJ, conductor stored energy density: 12 kJ/kg.
- 6.0 T in center, 6.4 T peak field in turns, Conductor 4 kt, cold mass: ≈ 6 kt.
- 1.4 m thick inner coil and 0.4 m thick outer shielding coil.
- Large forces resulting from minor misalignments between the coils, fix it!
- Support cylinders and spokes are essential parts of the cold mass.
- 2.6 T in 3.5 m gap between solenoids for muon trackers.
- 5 mT line at 28 meters radius.

Twin Solenoid + yoke-free dipole

New design of the 10 Tm dipoles without iron (to avoid forces and torques).

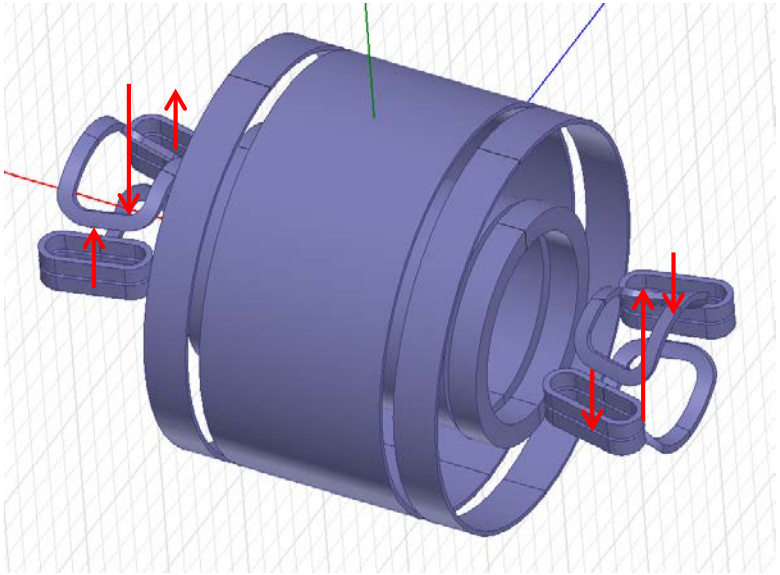

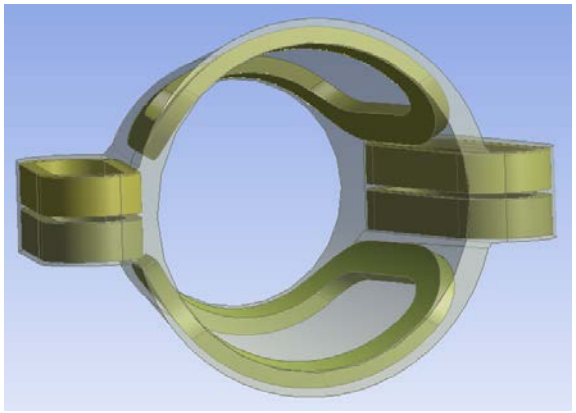

Featuring: a main central dipole + 4 racetrack side-dipoles, and:

- **No torque + no force in axial direction**
- Field integral at 0°: 10 Tm
- Peak field: 5.6 T in main dipole, 6.0 T in side poles
- Stored energy: 1.8 GJ when in Twin Solenoid back ground field
- Coil mass 160 t, support structure 320 t, total 480 t.

Option 3: Toroids + Solenoid + Dipoles (ATLAS+)

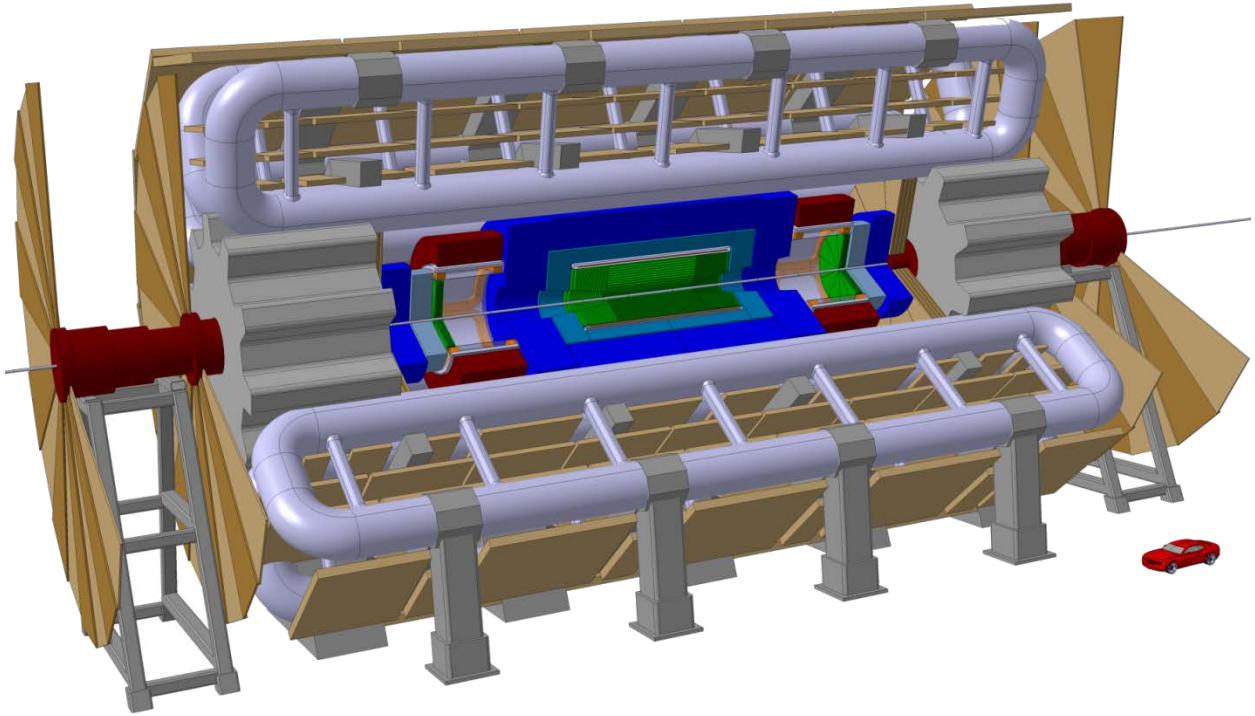

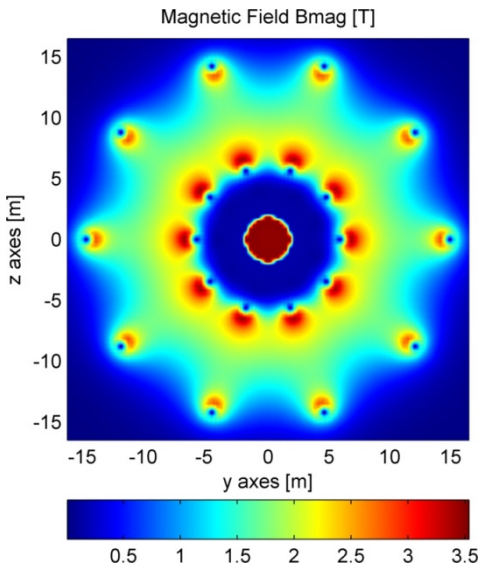

- **3.5 T Central Solenoid** for the inner detector trackers (0.6 GJ)
- One **Air core Barrel Toroid** with 16 Tm in toroid window (48 GJ)
- **Two End Cap Toroids** to cover medium angle forward direction (2x1.6 GJ)
- **Two internal Dipoles** to cover low-angle forward direction with 10 Tm.
- **Size: 30 m diameter x 52 m length (36,000 m^3)**.

Option 3: Toroids + Solenoid + Dipoles (ATLAS+)

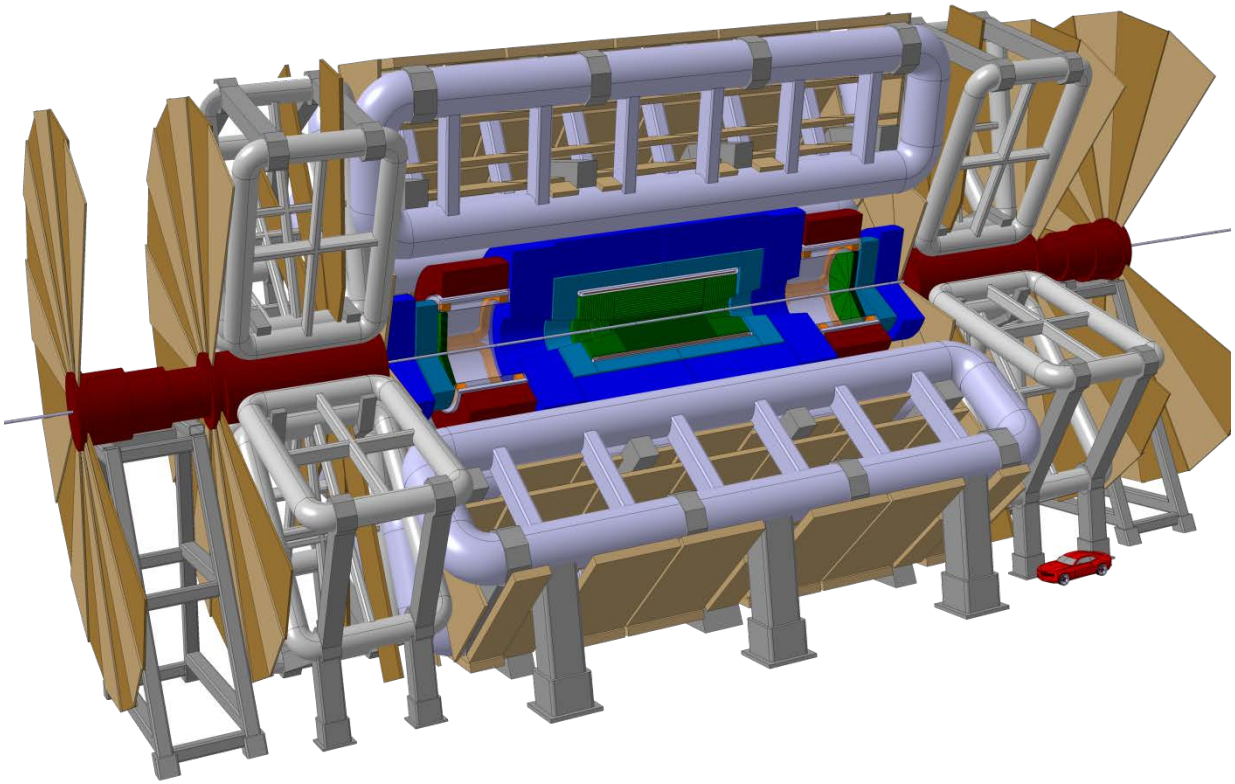

Stored energy	40 GJ (34 GJ BT + 2x 3 GJ ECT)
Conductor mass	3.3 kt (10x 280 t BT modules + 20x 25 t ECT modules)
Length BT [m]	36
Inner radius BT [m]	7
Outer radius BT [m]	15
Length ECT [m]	8
Inner radius ECT [m]	2.5
Outer radius ECT [m]	15

Variant with shorter Barrel Toroid and full diameter End Cap Toroids, both in open structure. Advantages:

- Shorter coils, easier to handle
- Open end cap toroids allowing muon chambers inside
- Improved coverage in overlap sections

4. Cost scaling - impact of size and field

Effect of B and R ∝ L on Solenoid Cost:

- Following scaling rules, calibrated with LEP & LHC detector magnets.
- Cost of 4, 5 and 6 T solenoids (no yoke) with radii of 3.5 to 6 m, length follows for fixed 28° opening angle.
- Same when including a minimum yoke (based on 4 M€/kt all-in).

✓ **Example: 6 T is ~60% more expensive in a 12 m bore than in a 10 m bore……!**

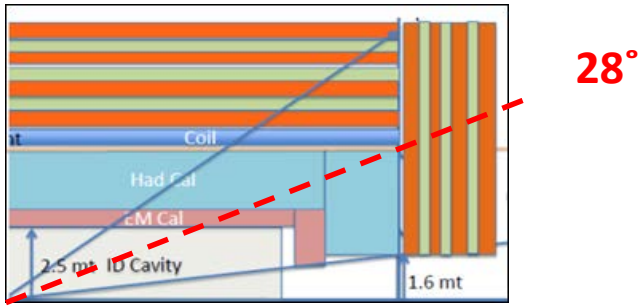

Disclaimer: these cost data are preliminary for such large systems, and a rough guide only !

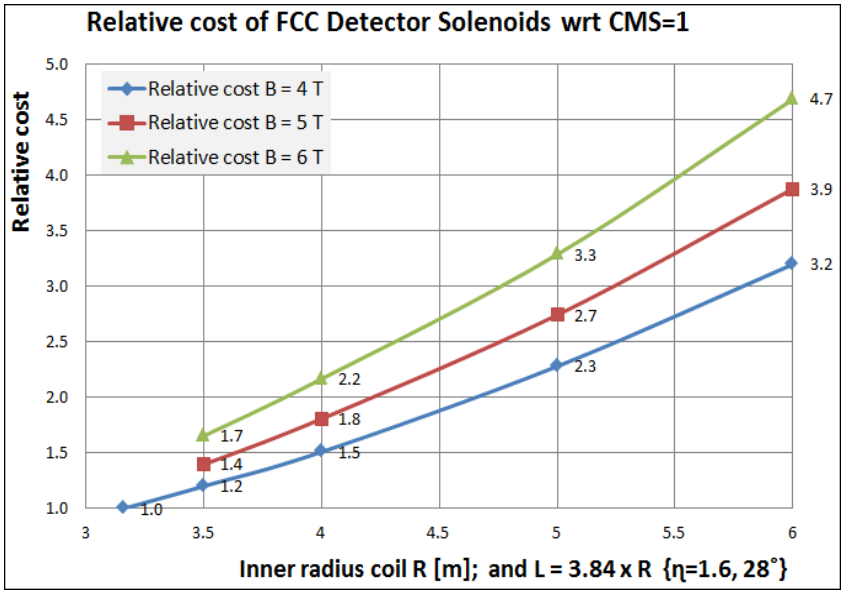

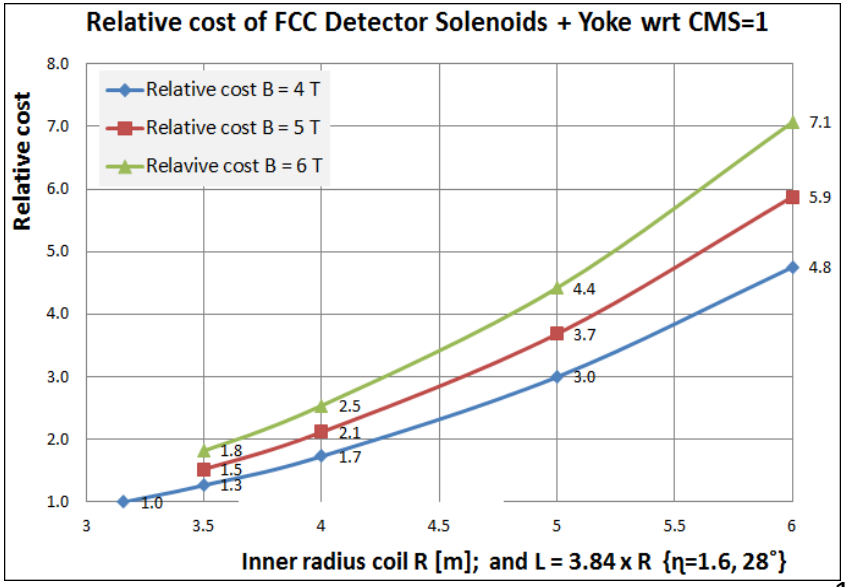

Cost Magnet services – example cryogenics

Cost of a standalone helium plant

He plant cost ≈ 1.2 x 2.6 x P(kW@4K)$^{0.6}$ [in 2015 M€]

(1.2 amplification factor for auxiliaries, transfer lines; 2.6 is a constant, accounting for inflation)

Cryogenics power scales with surface of cryostat, 1 in single solenoid, 2 in twin solenoid 2 and many in toroids.

Example for CMS+ scaling:

- CMS today has 1.5 kW.
- CMS+ in R=6m/L=23m version requires 4x, so 6 kW (8.5 M€).
- Twin Solenoid in R=6m/L-23m requires 12x, so 18 kW (16.5 M€).
- Why? 2 cryostats and more surface on the shielding coil!
- ATLAS+ needs some 20 kW (18 M€).

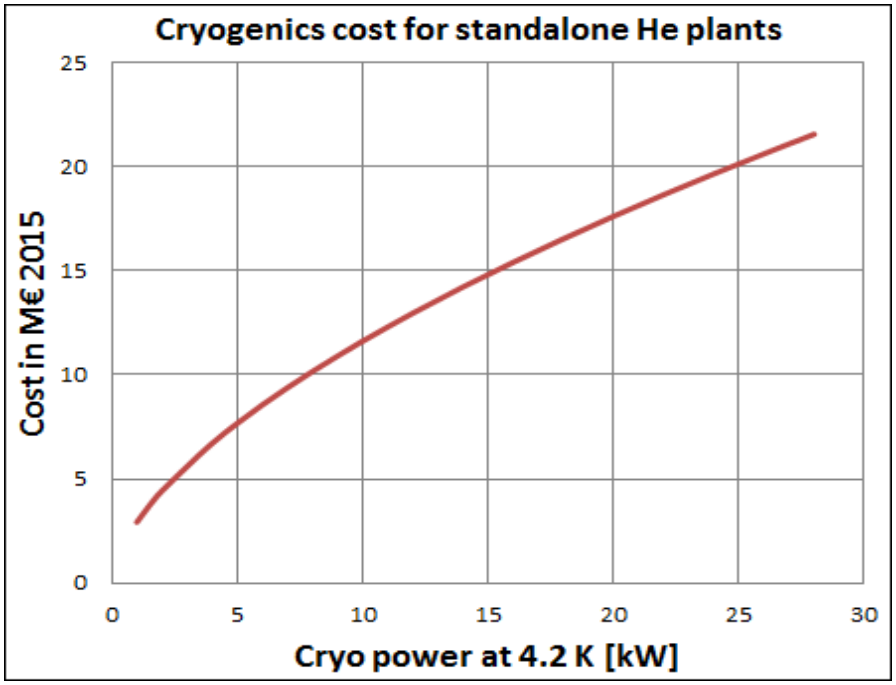

Cryo cost are in the 10-20 M€ range and small when compared to cost of magnets and iron, no worries.

5. Cavern size, shafts, opening and closing

- For all three options we need manufacturing, pre-assembly and installation scenarios.
- And to define and respect limitations on cavern size, adjacent spaces for assembly and shafts diameters.
- Based on the net volume needed for magnet installation, also the additional space needed for opening, closing and repair have to be defined.

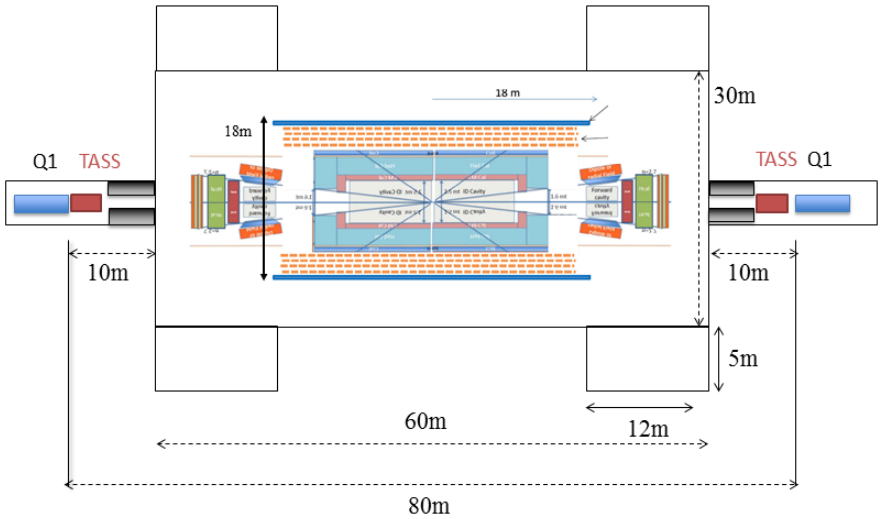

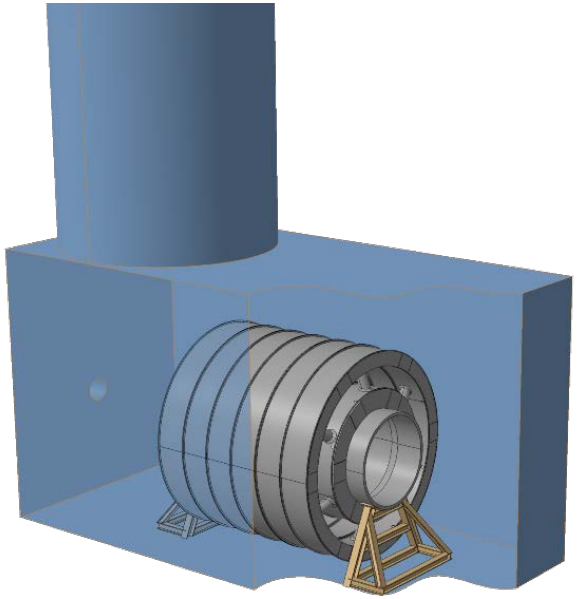

Twin Solenoid - modular design and structure

	Inner coil	Outer coil
Inner radius [m]	6.2	11.5
Thickness [m]	1.73	1.02
Length [m]	23.0	23.0
Mass [t]	4 800	4500
# of Modules	6	

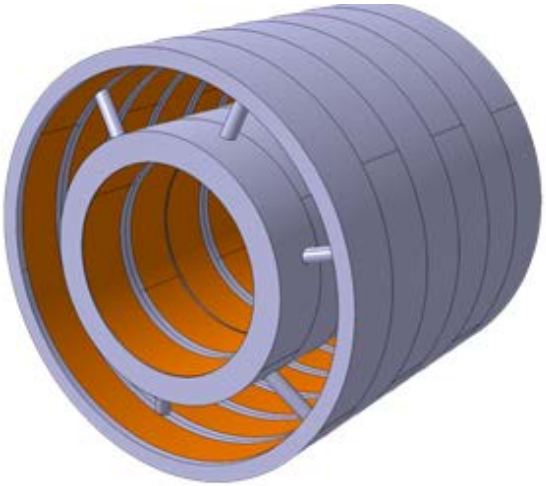

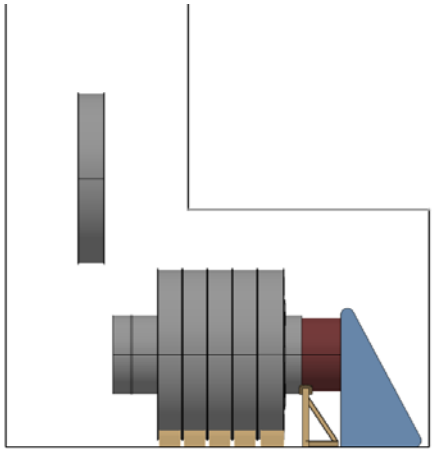

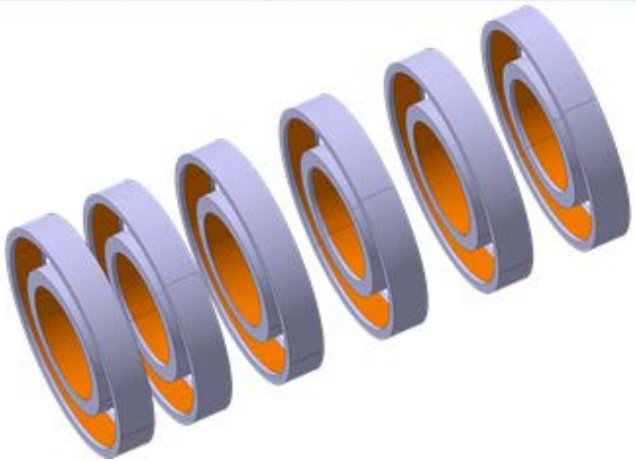

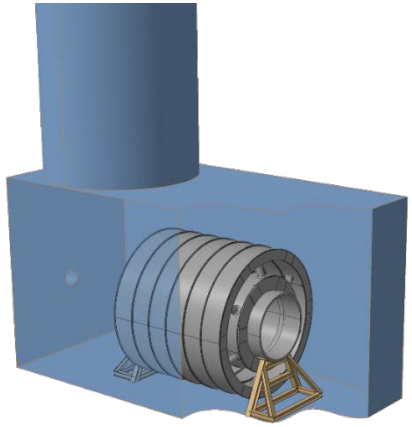

- Twin solenoid solution was studied in more detail.
- Finding a stable structure connecting both coils.
- Seeking a production and assembly scenario.

Twin Solenoid - modularity and shaft size

Cavern shaft of about 28 m needed

- Assembly based on modularity.
- Coil module = Inner + Outer coil + cryostat.
- Cavern shaft diameter is driven by the module's outer diameter and length.
- Clearance for safety is 1 m.
- Mass per module is 2000 t (heaviest part).

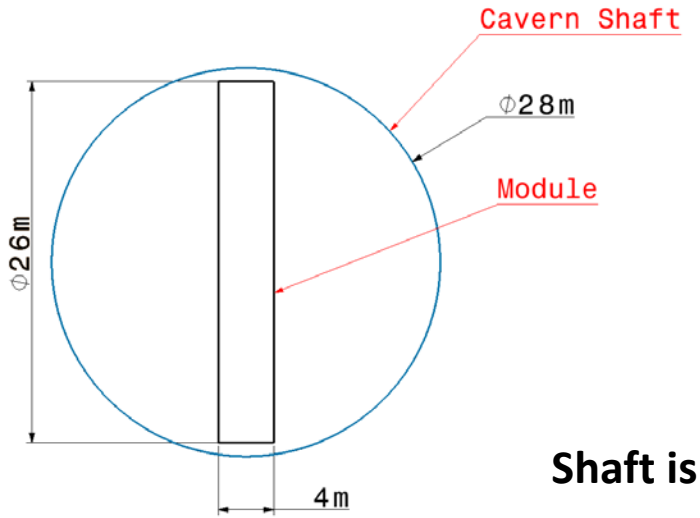

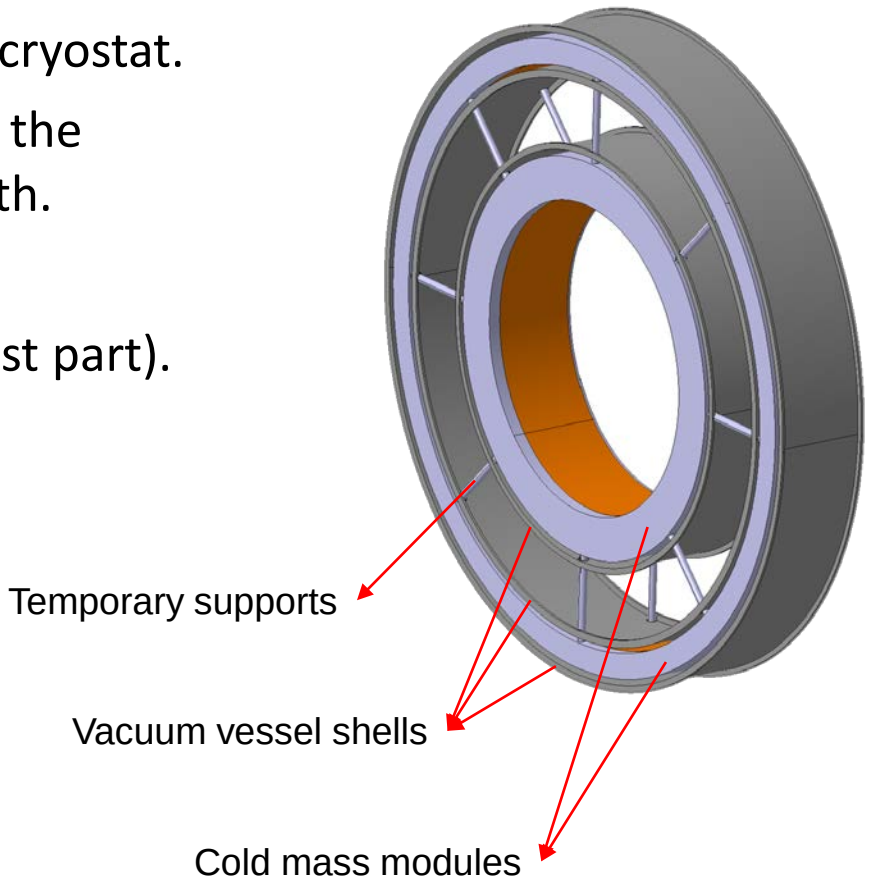

Shaft is deep and wide!

6. FCC Detector Magnets Development group

The dreamed 6 T – 50 GJ class magnets are far beyond what has been demonstrated to work. A rigorous design and engineering effort has to start.

Charge: deliver the Magnets Chapter in the FCC-HH detector CDR (2018)

- Establish a work program and schedule
- Do the necessary design studies and engineering.

New working group established, a team within CERN with participation of other institutes.

Present composition (and Acknowledgements):

- CERN: H. ten Kate, A. Dudarev, M. Mentink, Helder Silva, G. Rolando, B. Cure, A. Gaddi, H. Gerwig, S. Klyukhin, U. Wagner, and students
- CEA-Saclay: C. Berriaud

✓ **..... other institutes welcome, join us!**

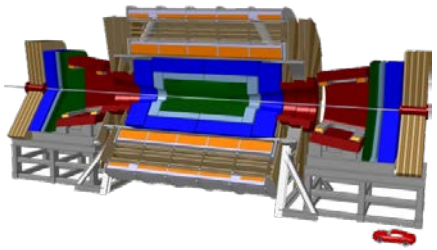

R&D issues

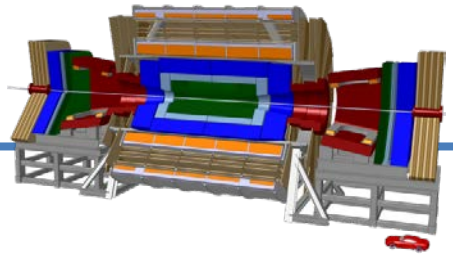

For each magnet variant complete the critical design:

- **Superconductor**: for 6 T class detector magnets, Al-Ni based or CICC, scale up conductors to 75-100 kA @ 6T, demonstrate temperature margin and stability.
- **Cold mass**: handling of stress, strain and temperature.
- **Cryogenics**: conduction or direct cooling of conductor, cooling power needed.
- **Cryostats**: including cold mass supports.
- **Quench protection**: current, voltage, discharge times, temperature.
- **Magnet in modules**: sizing and weight, assembly and installation scenarios.
- Magnetic shielding and Radiation shielding requirements.
- **Realistic schedule**, for R&D, production, installation.
- **Cost estimate**, compare variants including assembly and installation.
- …and more.

Conclusion

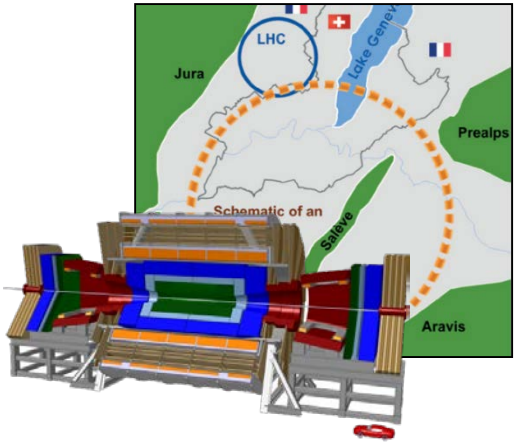

- ✓ Conceptual design study for a Future Circular Collider has started.
- ✓ A first look at 3 options for detector magnets probing 100 TeV p-p collisions completed.
- ✓ Magnet dimensions grow with the collision energy.
- ✓ Magnets are “huge”: 20-30m diameter, 30-50m long, 60-80 GJ.
- ✓ Main focus on 2 main designs featuring 10 + 12 m bore & 5 and 6 T
  - ✓ Twin solenoid concept has nice features: light, elegant, effective, and allowing muon tracking in the intervening space.
  - ✓ Solenoid + Yoke, with minimized yoke.
  - ✓ And the 10 Tm dipoles for covering forward physics.

The good news: there are no principle technical problems impeding the constructing of these magnets.