Numerical Simulation and Experimental Investigation of a Novel Scotch Yoke for a Gifford-McMahon Cryocooler

Mingyao Xu and Takaaki Morie

July 1, 2015

Technology Research Center
Sumitomo Heavy Industries, Ltd.

Contents

- **Introduction**

Introduction

- Since 1990, the efficiency of a 4K GM cryocooler has been continuously improved by optimizing the operation parameter and valve timing, etc.

- In 2012, a high-efficiency cold head was developed at SHI and the input power was reduced by about 30% compared to a conventional 1W 4K GM cryocooler. (ICEC 24, ICC 17)

- In order to improve the efficiency of the cold head, several novel and effective concepts were proposed and investigated.

- One of the novel concepts was to modify the Scotch yoke to carry out an asymmetric GM cycle.

- **Simulation and Analysis**
  - **Conventional and Novel Scotch Yoke**
  - **Simulation**

Two-stage GM Cryocooler

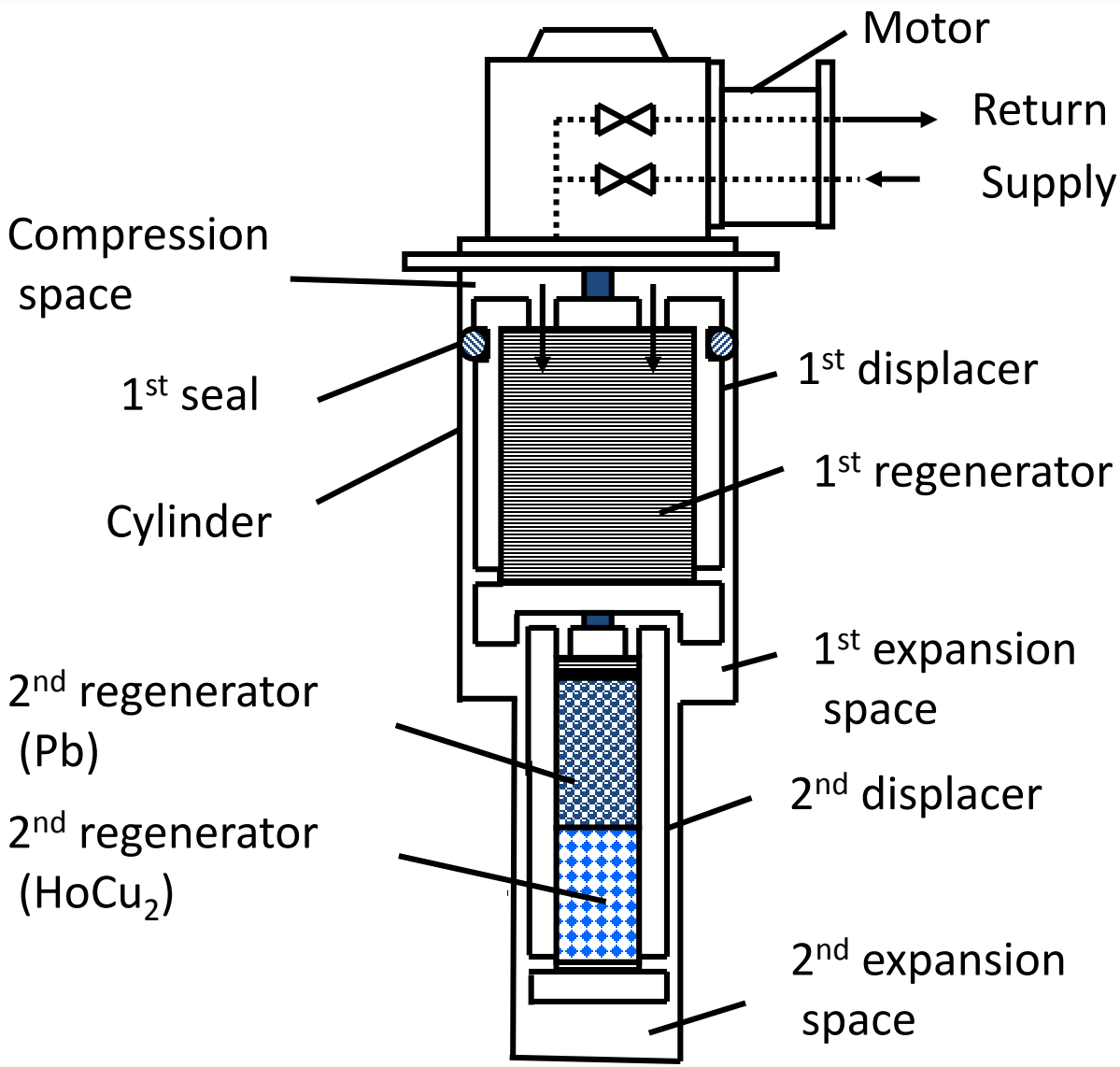

Driving Mechanism of a GM Cryocooler

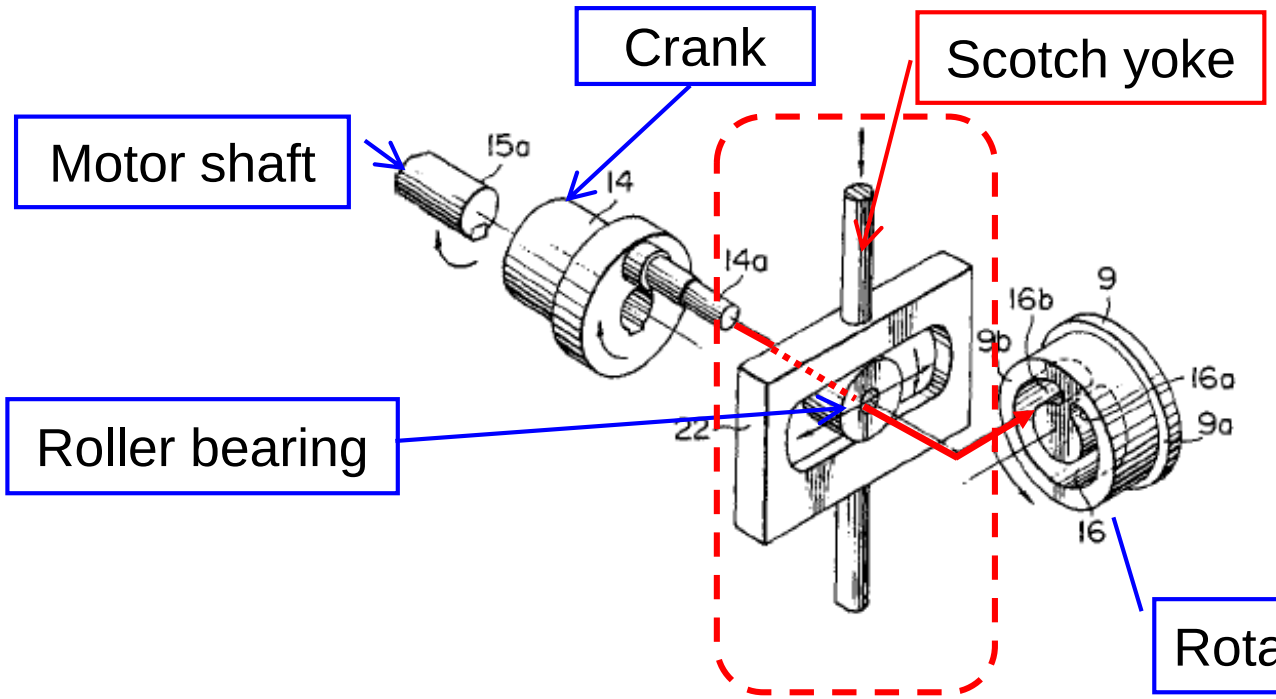

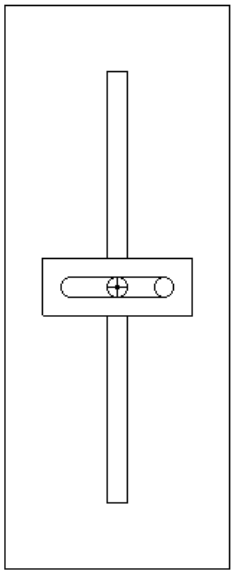

- Scotch yoke is used to transfer valve motor rotation to reciprocating displacer motion

Scotch Yoke

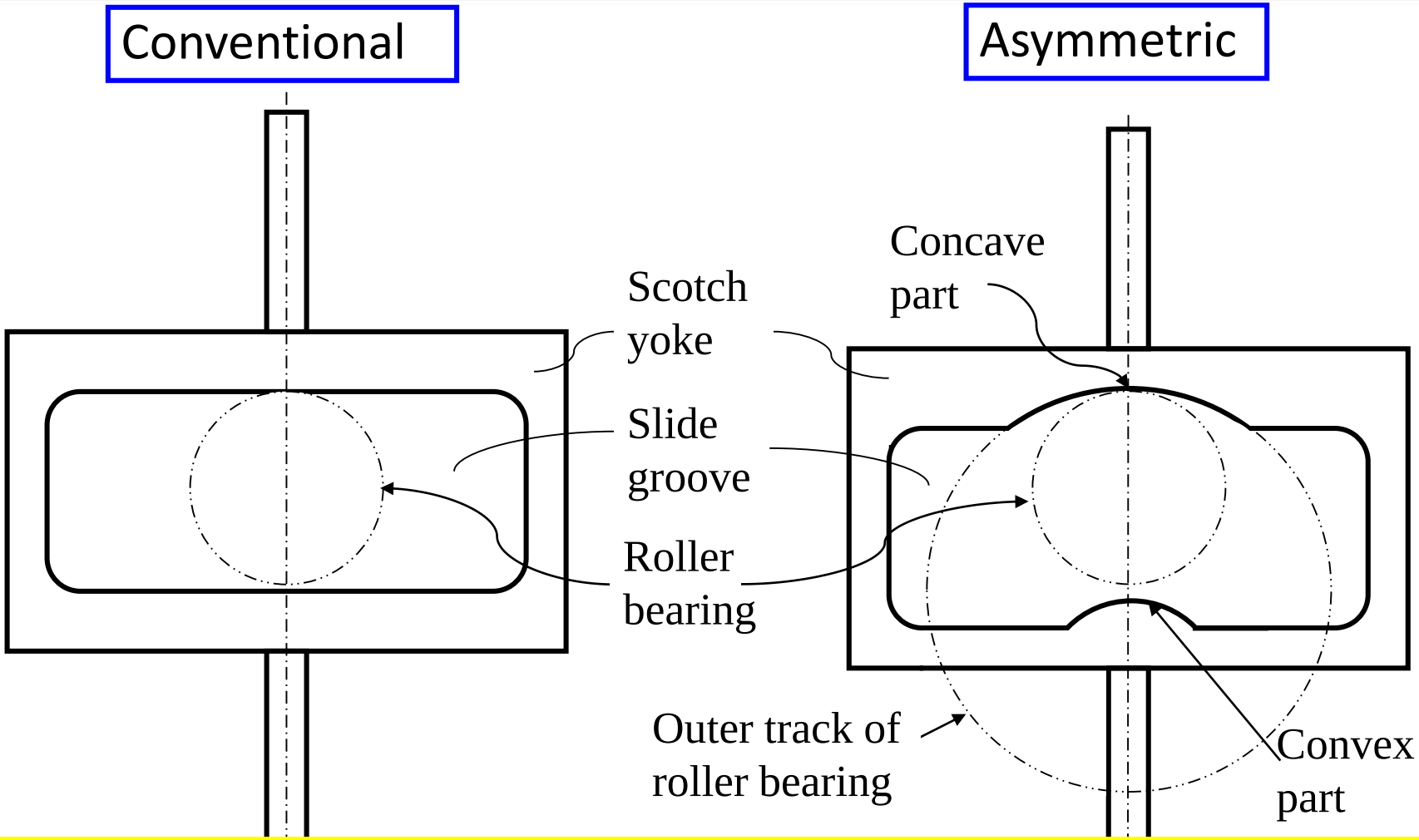

- In the novel Scotch yoke, there is a concave part at the upper center of the slide groove and a convex part at the lower center of the slide groove

Physical Model

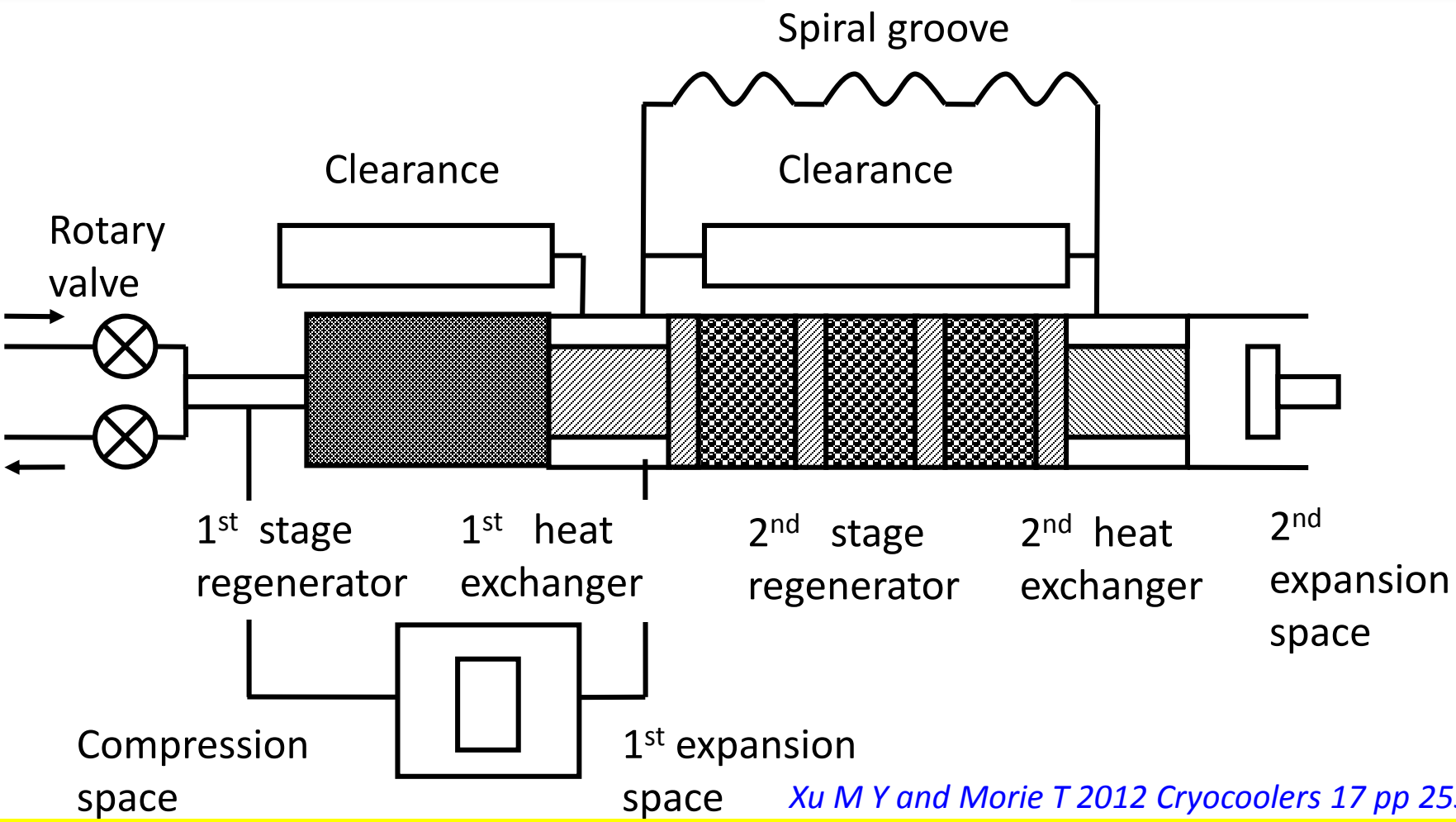

Xu M Y and Morie T 2012 Cryocoolers 17 pp 253-9

- Calculate both the 1st and 2nd stage , simultaneously
- Calculate losses in the clearance and spiral groove

Basic Equations

- Continuity Equation

$$\frac{dm_i}{dt} = \dot{m}_i - \dot{m}_{i+1}$$

- Energy Conservation Equation of Gas Flow

$$\frac{\partial(m_i h_i)}{\partial t} + (\dot{m}h)_{f_{i+1}} - (\dot{m}h)_{f_i} + \alpha_i A_i (T_i - T_{wi}) - V_i \frac{dP_i}{dt} = 0$$

- Momentum Conservation Equation

$$\frac{\partial P_i}{\partial x} = -f_r \frac{1}{d_h} \frac{\rho u_i^2}{2} \frac{u_i}{|u_i|}$$

- Energy Conservation Equation of Regenerator Material

$$V_{wi} c_{wi} \frac{\partial T_{wi}}{\partial t} = -\lambda_{wi} A_{wi} \frac{\partial^2 T_{wi}}{\partial x^2} dx + \alpha_i A_i (T_i - T_{wi})$$

Xu M Y and Morie T 2012 Cryocoolers 17 pp 253-9

Basic Equations

- 1st Displacer Movement with a Conventional Scotch Yoke

$$x_{e1} = S_{ce1} + 0.5 \times S_{e1} \times \left\{ 1 - \cos\left[(\alpha - \varphi_{e1}) \times \frac{\pi}{180} \right] \right\}$$

- 1st Displacer Movement with a Novel Scotch Yoke in principle

$$x_{e1} = \begin{cases} S_{ce1} + 0.5 \times S_{e1} \times \left\{ 2.0 - cos\left[(\alpha - \varphi_{e1}) \times \frac{\pi}{180} \right] - cos\left(\frac{\pi}{180} \theta \right) \right\} & 0 < \alpha \leq \beta \\ S_{ce1} + S_{e1} \times \left\{ 1.0 - cos\left[(\alpha - \varphi_{e1}) \times \frac{\pi}{180} \right] \right\} & \beta < \alpha \leq \gamma \\ S_{ce1} + 0.5 \times S_{e1} \times \left\{ 2.0 - cos\left[(\alpha - \varphi_{e1}) \times \frac{\pi}{180} \right] - cos\left(\frac{\pi}{180} \theta \right) \right\} & 0 < \alpha \leq 180 + \beta \\ S_{ce1} + S_{e1} & 180 + \beta < \alpha \leq 180 + \gamma \\ S_{ce1} + 0.5 \times S_{e1} \times \left\{ 2.0 - cos\left[(\alpha - \varphi_{e1}) \times \frac{\pi}{180} \right] + cos\left(\frac{\pi}{180} \theta \right) \right\} & 180 + \beta < \alpha \leq 360 \end{cases}$$

Movement of Roller Bearing & Displacement of Scotch Yoke

CEC-ICMC 2015 C3OrD-1

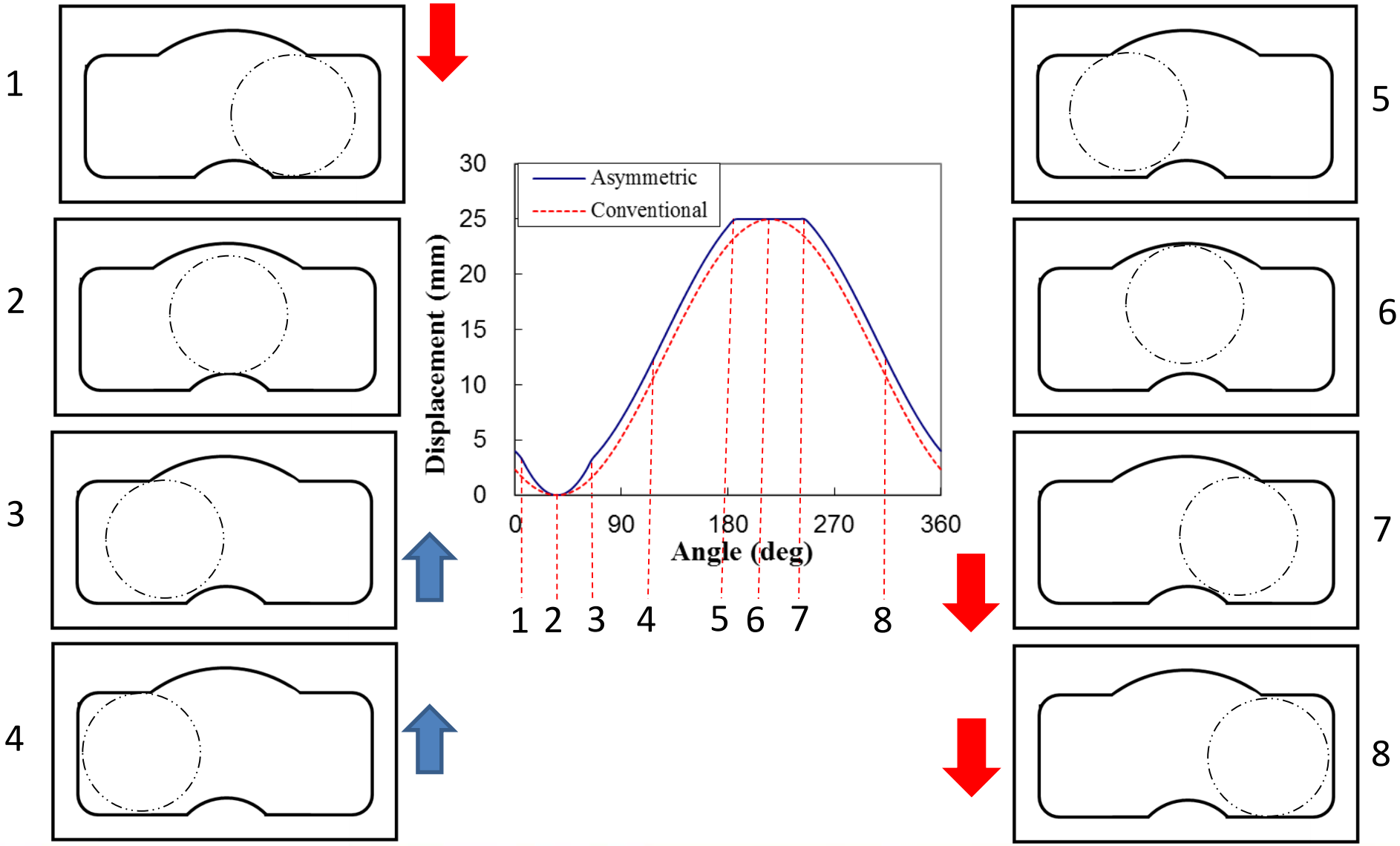

Simulation Results

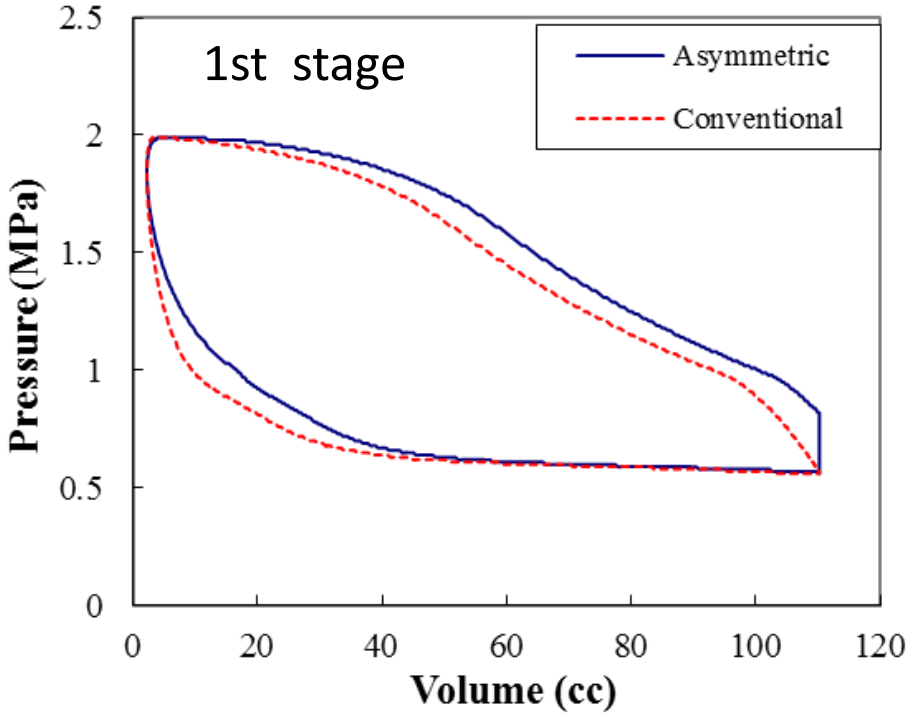

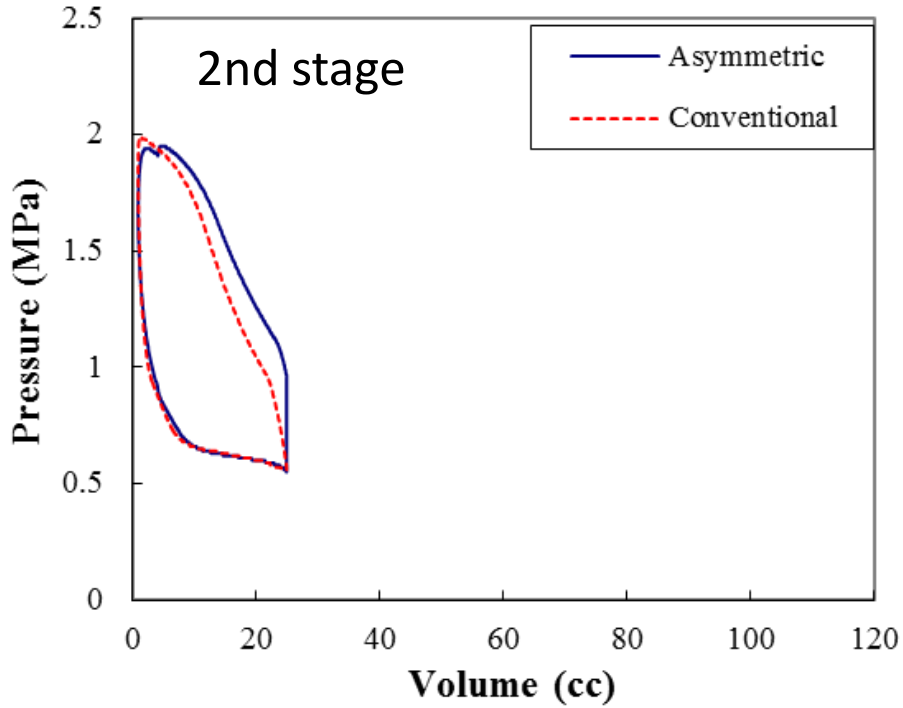

	Cooling capacity		P-V work		Mass flow rate	
	1st stage at 40 K (W)	2nd stage at 4.2 K (W)	1st stage (W)	2nd stage (W)	1st stage (g/s)	2nd stage (g/s)
Conventional	55.3	1.63	91.9	19.7	7.1	2.8
Asymmetric	58.9	1.73	96.8	20.7	7.3	3.1

- **Experimental Results and Discussions**
  - **Scotch Yoke Configuration**
  - **P-V Work and Cooling Capacity**

Experimental Results

- The cooling capacity at the first stage at 40 K was improved by about 10 %, from 51.5 W to 57.3 W.

	Temperature without heat load		Temperature with 44W/1.0W heat load		Estimated cooling capacity	
	1st stage (K)	2nd stage (K)	1st stage (K)	2nd stage (K)	1st stage at 40 K (W)	2nd stage at 4.2 K (W)
Conventional	22.1	2.99	37.4	3.94	51.5	1.27
Asymmetric	22.3	3.00	35.9	3.96	57.3	1.25

- **Conclusions**

Conclusions

- ✓ A novel GM cycle, called an asymmetric GM cycle, was proposed.
- ✓ In the GM cycle, the expansion process is longer, while the discharging process is shorter than in a conventional GM cycle.
- ✓ In order to carry out the GM cycle, a novel Scotch yoke was invented. In the Scotch yoke, there is a concave part at the upper center of the slide groove and a convex part at the lower center of the slide groove.
- ✓ The effect of the Scotch yoke has been confirmed by numerical simulation and experimental investigation. The cooling capacity at the first stage at 40 K was improved by about 10 %, from 51.5 W to 57.3 W.

Thank you!