Performance of an Adjustable Threaded Inertance Tube

Wenjie Zhou, John M. Pfotenhauer, Greg F. Nellis, Shengyu Liu

Department of Mechanical Engineering
University of Wisconsin-Madison

UNIVERSITY OF WISCONSIN MADISON

Can we improve or adjust the performance of a Pulse Tube Refrigerator ? …

… while it is operating?

Adjustments for Regenerative Coolers

Charge pressure

Frequency

Phase angle between the pressure and mass flow oscillations

Development

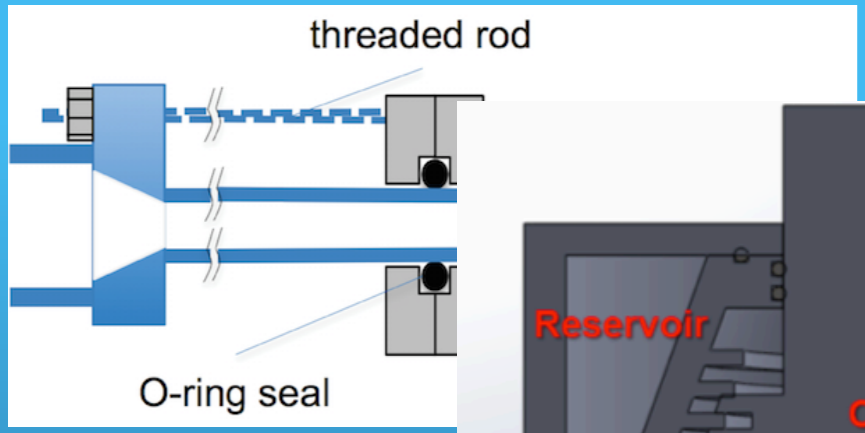

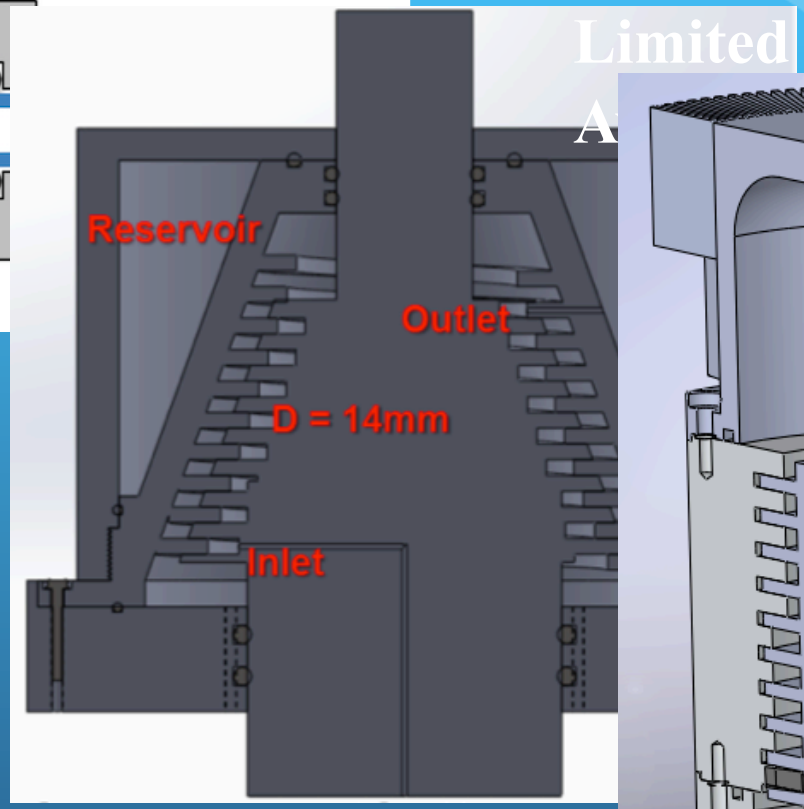

Limited Phase Shift

A

er

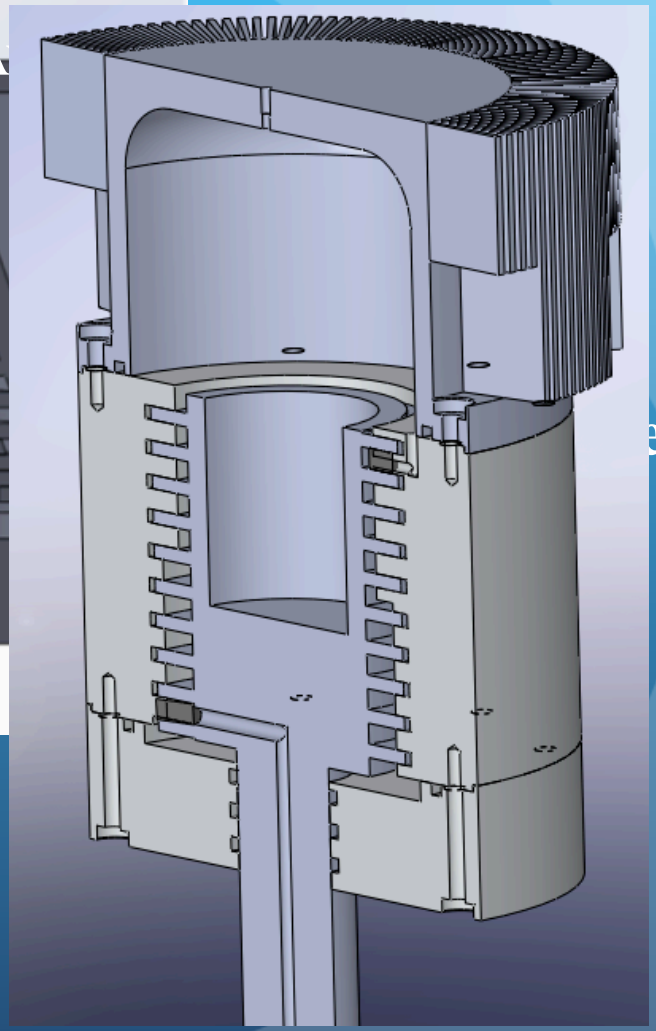

Reasonable Fabrication

Constant Power Phase Shift

UNIVERSITY OF WISCONSIN MADISON

Geometry Details

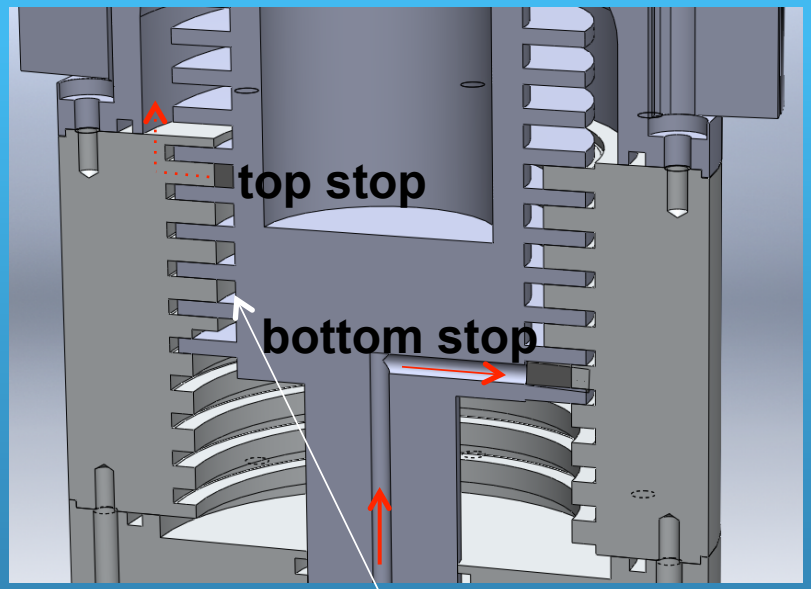

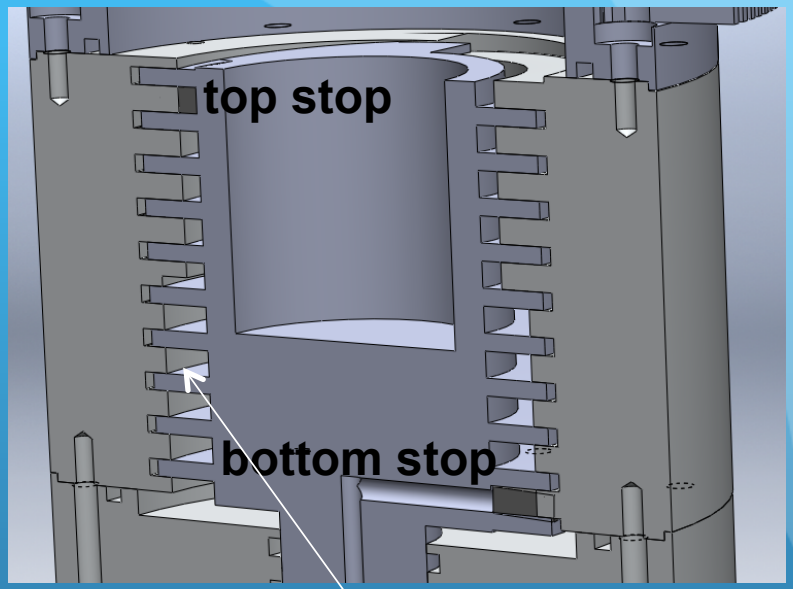

Outer screw at bottom-most position

Inertance channel:

Helical Length = 1.74 m
Hydraulic Diameter = 7 mm

Reservoir volume = 1.42 liters

Outer screw at top-most position

Inertance channel:

Helical Length = 1.74 m + 1.86 m
Hydraulic Diameter = 7 mm, 10 mm

Reservoir volume = 1.59 liters

Overall diameter = 0.25 m
Axial length: = 0.25 m

UNIVERSITY OF WISCONSIN MADISON

Imperfect Seal

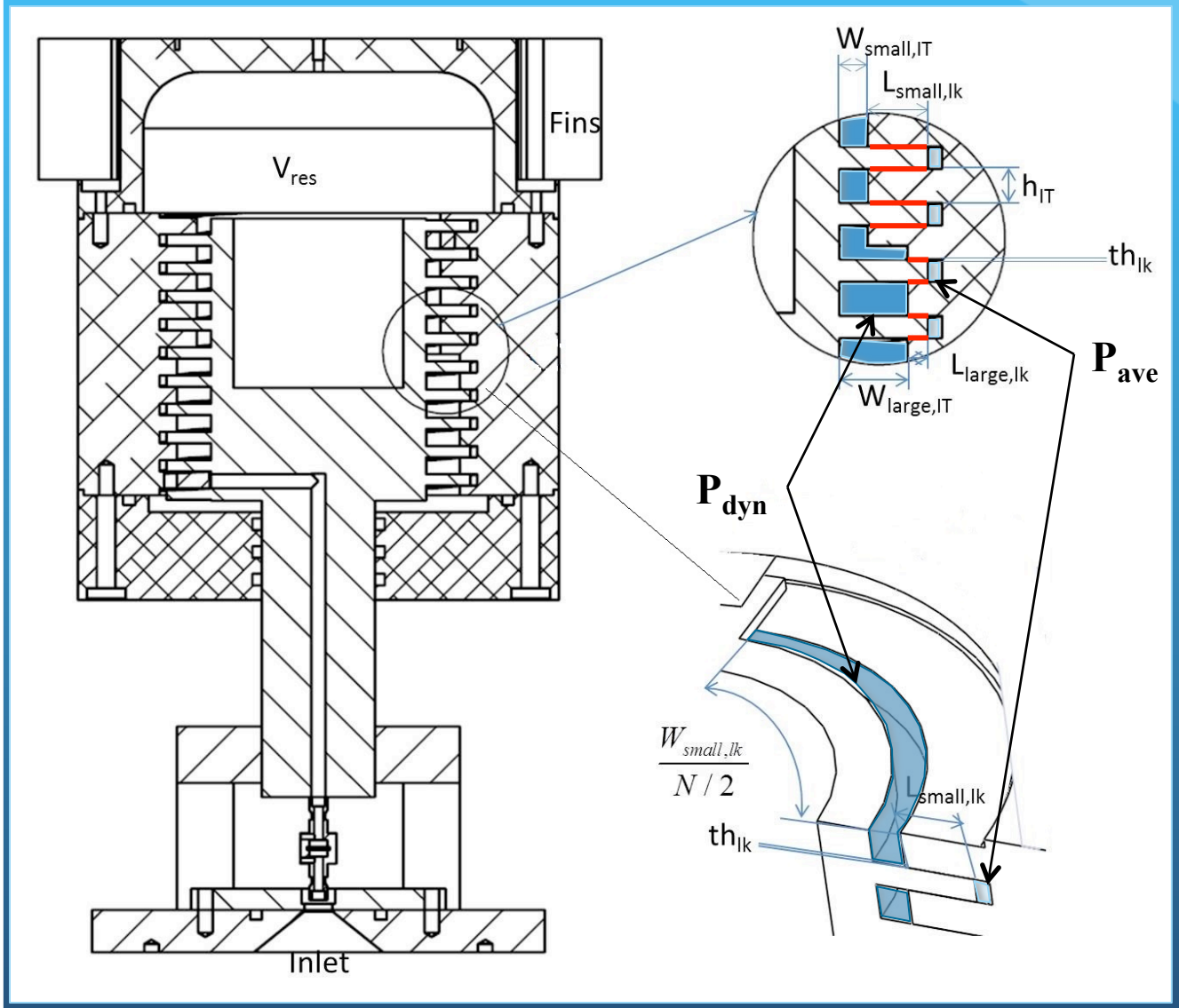

Flow resistance through leak

$$R_{lk} = \frac{V_{lk} f_{lk} L_{lk} N}{2 D_{lk} th_{lk} W_{lk}}$$

Entrance effect: See paper

UNIVERSITY OF WISCONSIN MADISON

Modified Distributed Component Model

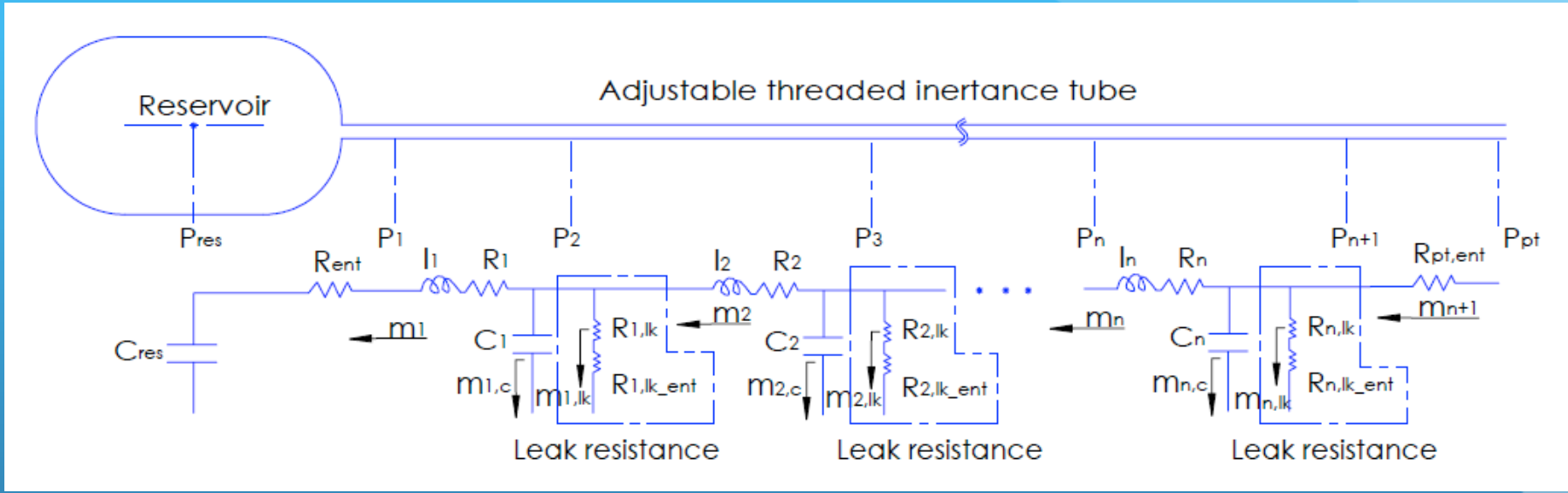

Determines the phase angle between mass and pressure oscillations

… at each node

… especially at the interface with the pulse tube

No leak

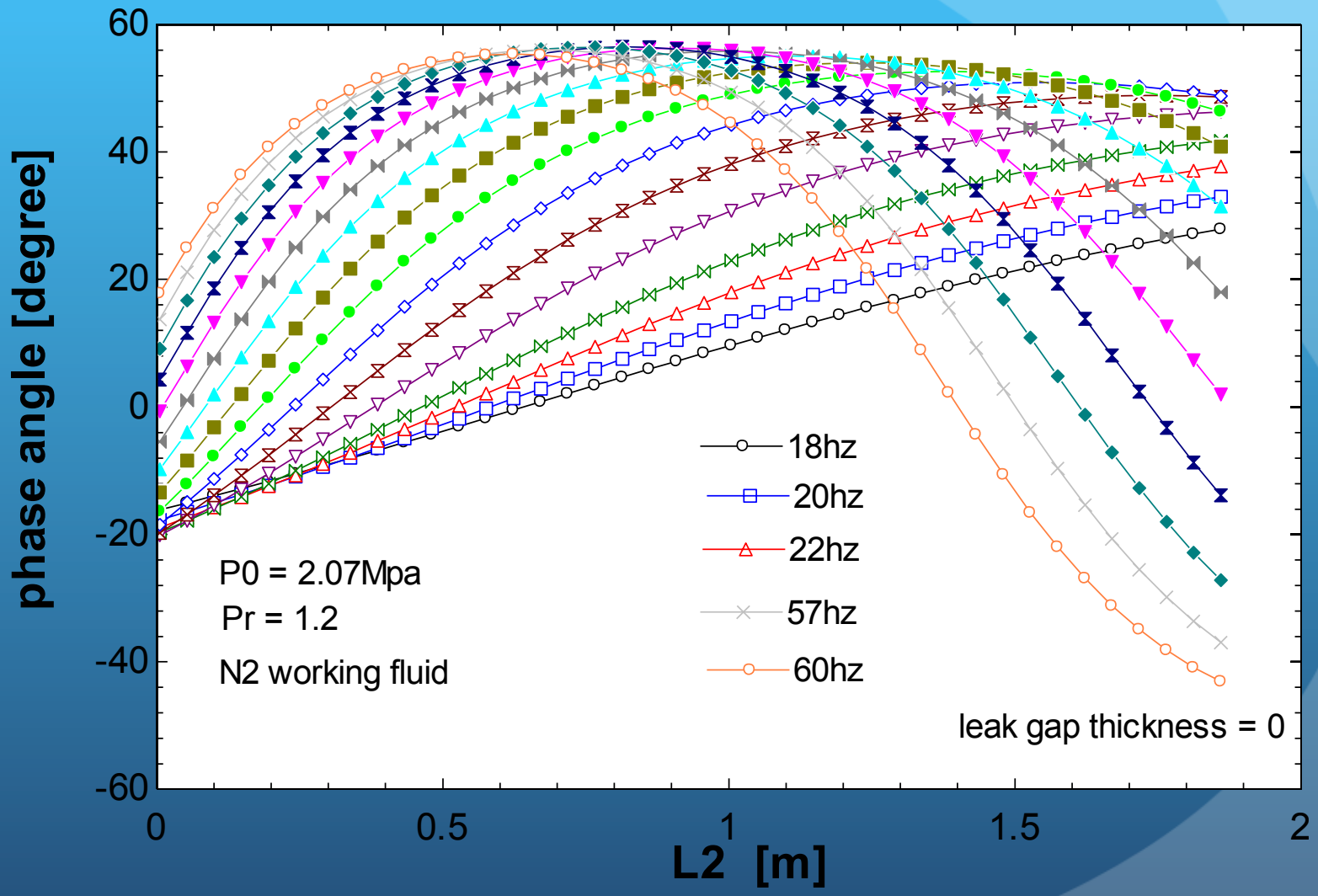

UNIVERSITY OF WISCONSIN MADISON

With leak

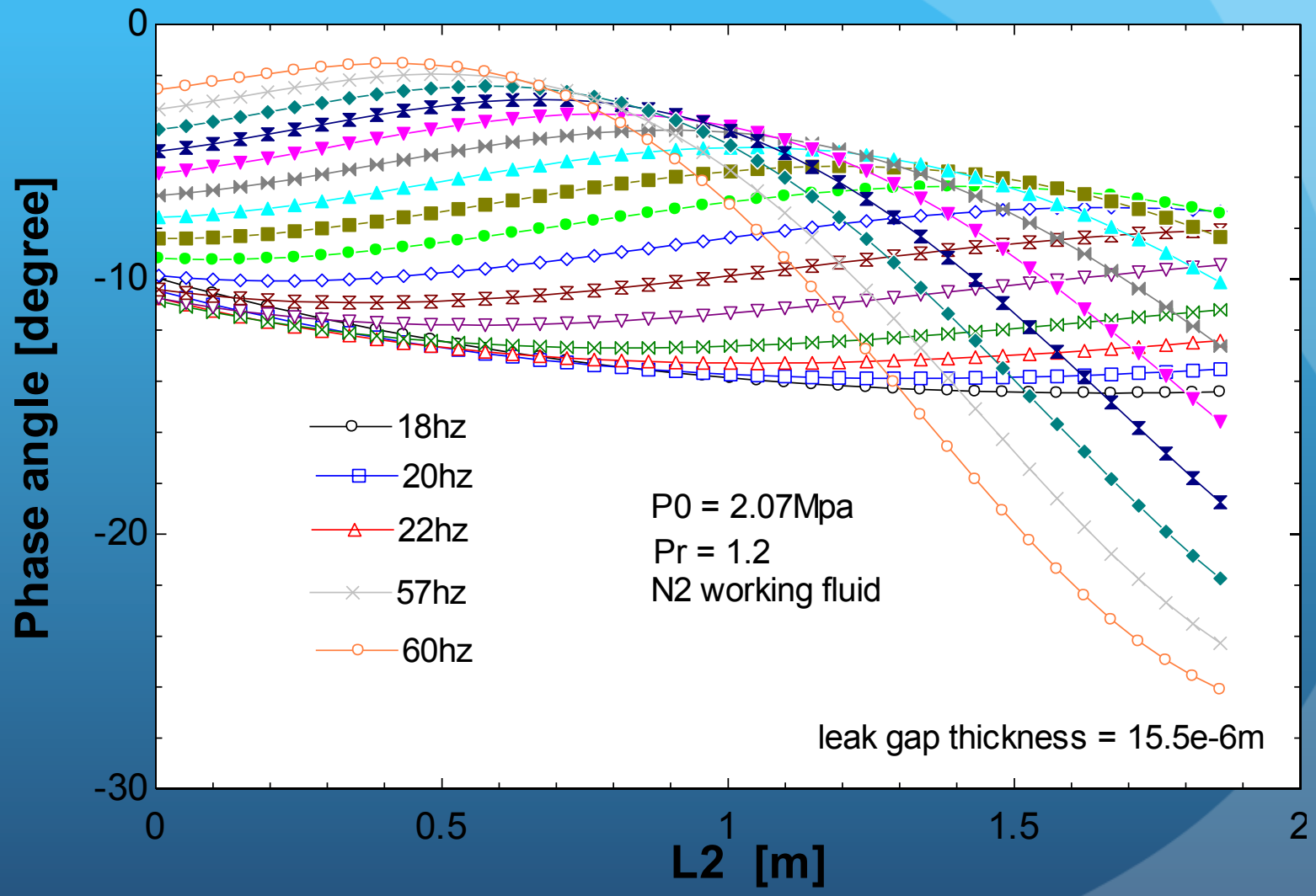

UNIVERSITY OF WISCONSIN MADISON

Experimental set-up

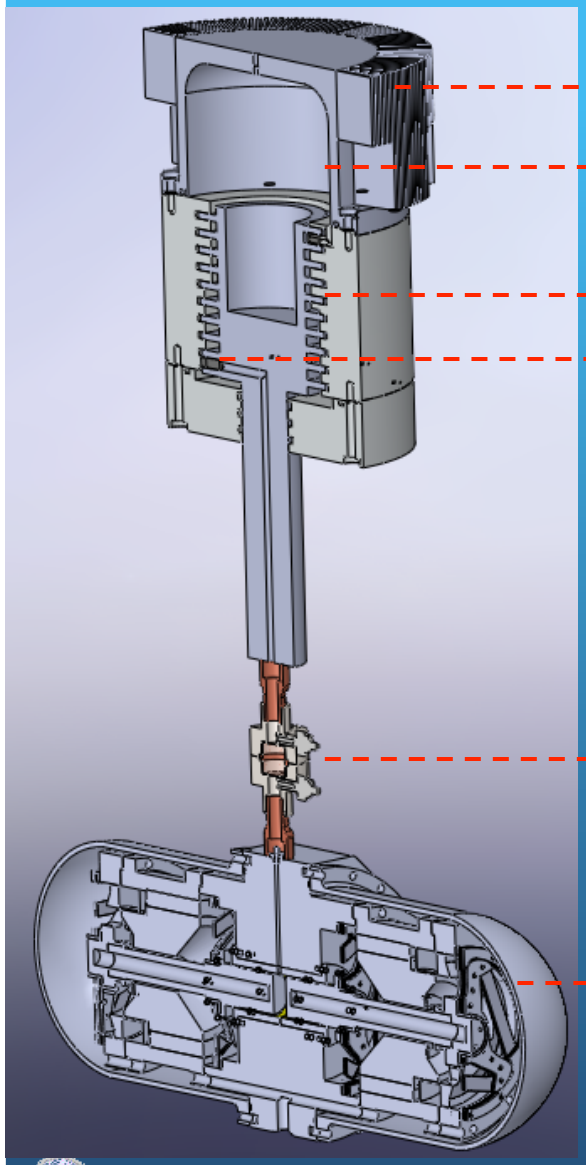

Fin heat exchanger

Reservoir

Cylindrical AIT

Bottom stop

Mass flow meter

Linear compressor

UNIVERSITY OF WISCONSIN MADISON

Experimental Results: 60 Hz

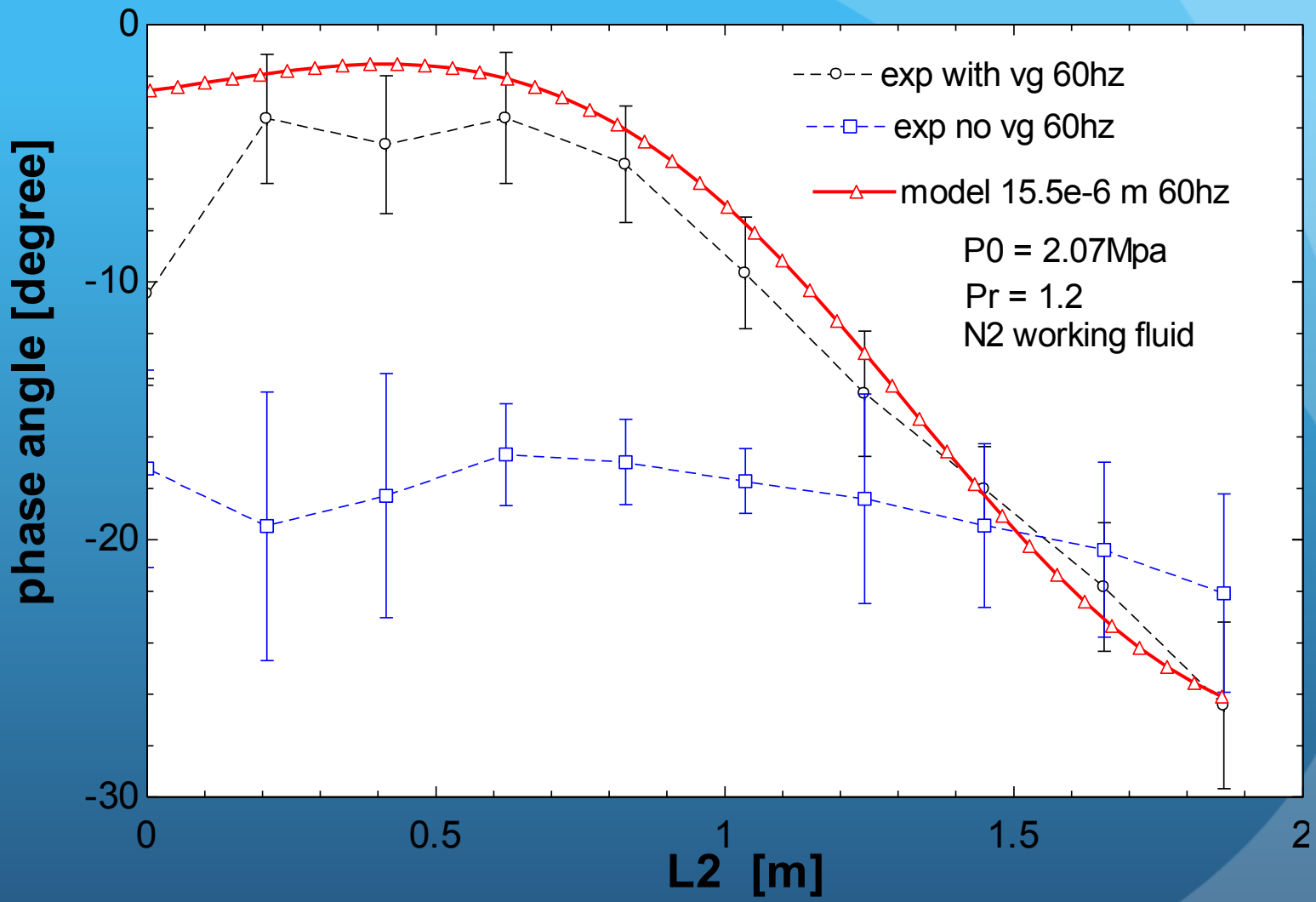

vg: vacuum grease applied between the threads

UNIVERSITY OF WISCONSIN MADISON

Experimental Results: 30 Hz

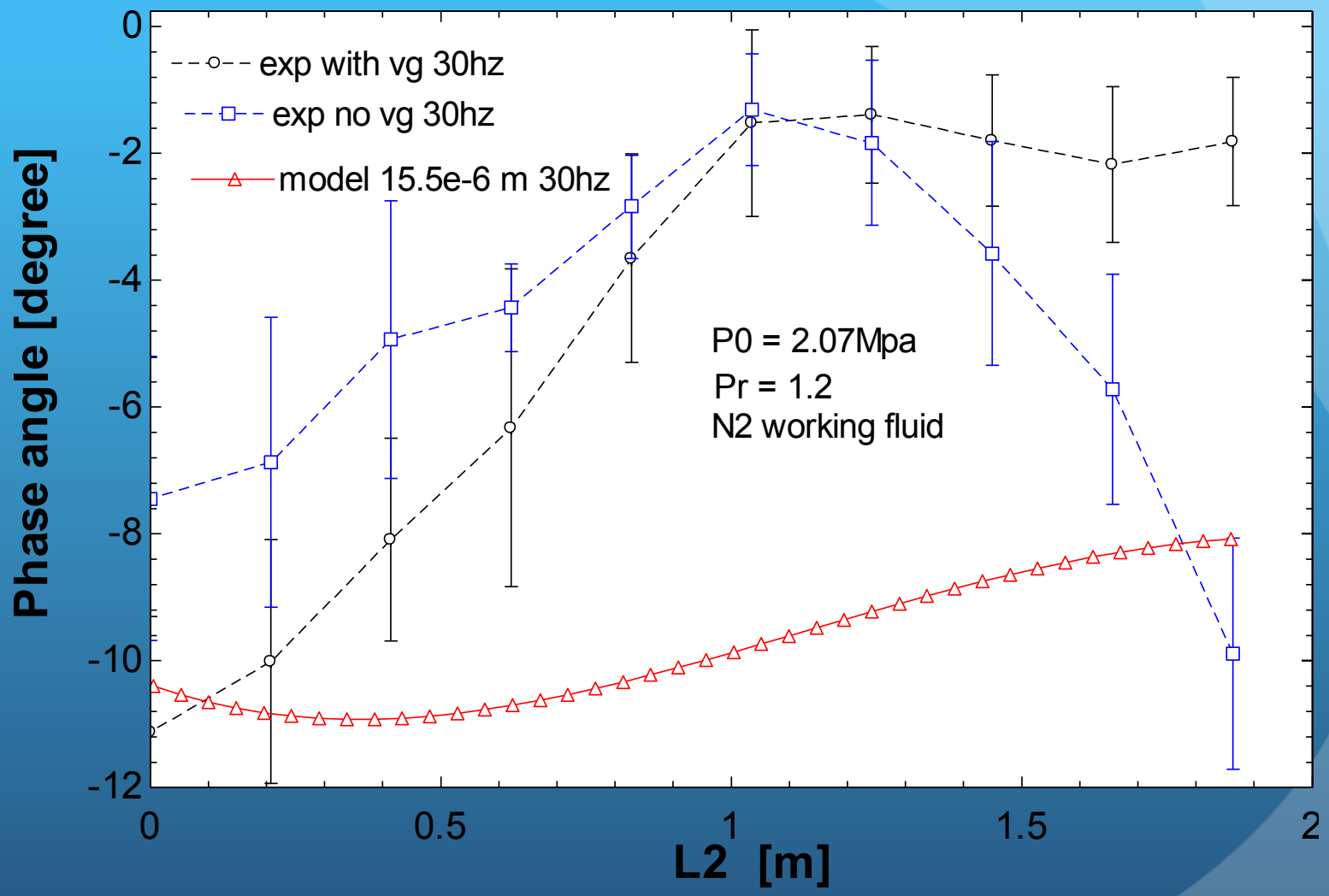

UNIVERSITY OF WISCONSIN MADISON

Experimental Results: High Frequencies

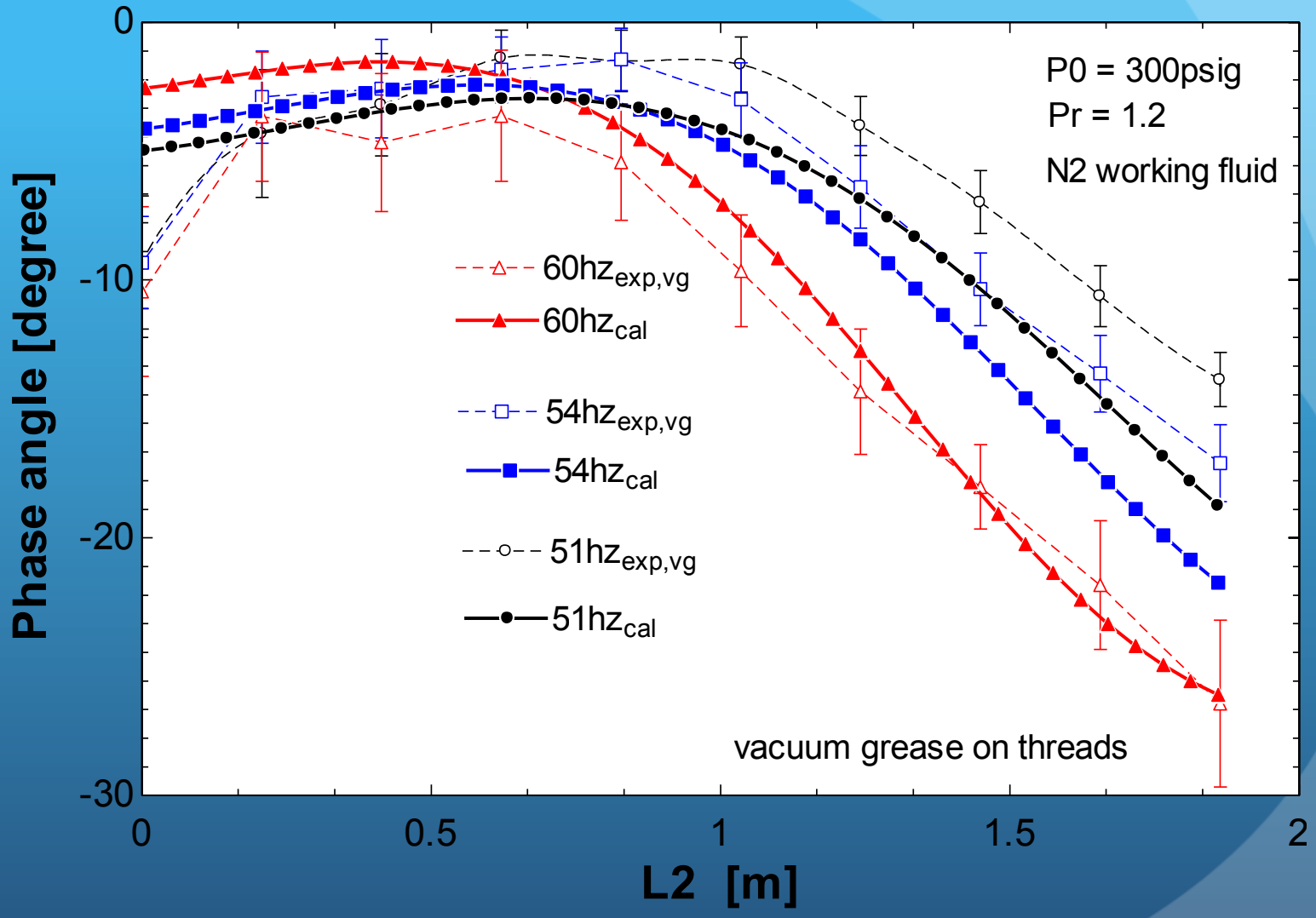

UNIVERSITY OF WISCONSIN MADISON

Discussion & Conclusions

- Concentric threaded inertance 'tube' can provide an adjustable phase shift: 0° ←→ -25°
  (P_o=2.07 MPa, P_r=1.2, f=60 Hz, W_{ac}~ 250 watts)

- Model and experiment agree well and highlight the importance of minimizing turn-turn leak:
  possible phase shift of +60° to -40°

- Future improvements to reduce leak:
  - Surface coatings (teflon?)
  - Back-side gap as parallel inertance channel

UNIVERSITY OF WISCONSIN MADISON

Questions?

UNIVERSITY OF WISCONSIN MADISON