Magnetic and structural design of a 15 T Nb_3Sn accelerator dipole model

V. V. Kashikhin, N. Andreev, E. Barzi, I. Novitski, A. V. Zlobin

C1PoK-05

Introduction

Hadron Colliders (HC) are the most powerful discovery tools in modern high energy physics. Interest to an HC with energy above the LHC reach gained further momentum in the strategic plans recently developed in the U.S., Europe and China. To build a ~100 TeV HC in a ~100 km tunnel, ~15 T dipoles operating at 1.9 or 4.5 K with 15-20% margin are needed. A nominal operating field up to 15-16 T can be provided by the Nb_3Sn technology. A practical demonstration of this field level in accelerator-quality magnets and a substantial reduction of magnet costs are key conditions for the realization of such a machine.

The main challenges for 15 T Nb_3Sn magnets include considerably higher Lorentz forces and larger stored energy than in existing accelerator magnets. The stronger forces generate higher stresses in the coil and mechanical structure and, thus, may need stress control to maintain them below the level acceptable for the brittle Nb_3Sn conductor. The large stored energy leads to further complications in the magnet quench protection.

FNAL has started the development of a 15 T Nb_3Sn dipole demonstrator for a 100 TeV scale HC based on the optimized "cos-theta" coil design. As a first step, the existing 11 T dipole, developed for LHC upgrades, will be equipped with two outer layers to achieve the field of 15 T in a 60 mm aperture of an interim model. Then, to increase the field margin, the inner 2-layer coil will be replaced with an optimized graded coil.

Magnetic and structural designs and parameters of the interim and optimized 15 T Nb_3Sn dipole demonstration models are described in this paper.

Magnetic Analysis

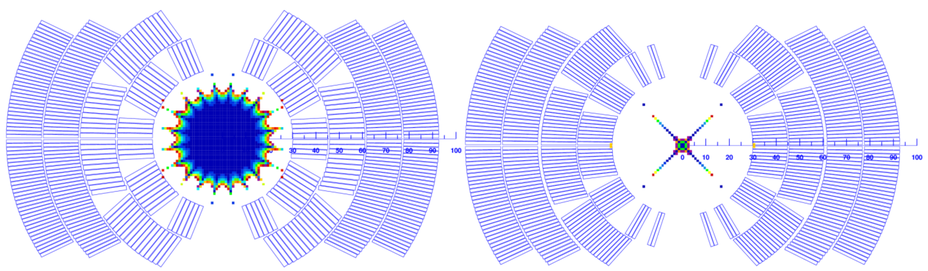

Figure 1. Cross-sections of the optimized (left) and the interim (right) coils with the field quality diagram in the coil aperture.

Table 1. Dimensions of reacted bare cables.

Parameter	Units	Cable 1	Cable 2
Number of strands		28	40
Mid-thickness	mm	1.870	1.319
Width	mm	15.10	15.10
Keystone angle	degree	0.805	0.805

Table 3. Field harmonics (in 10^{-4} of the dipole component) in the magnet body at R_{ref}=17 mm.

Harmonic	Interim	Optimal
b_3	93.2575	0.0018
b_5	-0.8684	0.0154
b_7	-0.1433	0.0523
b_9	0.4503	0.0612

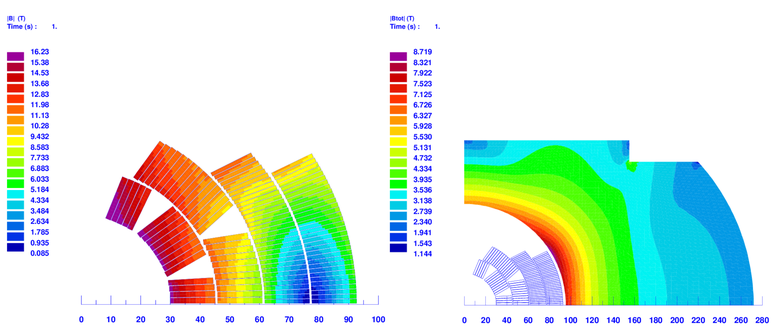

Figure 3. 2D field distribution in the optimal coil (left) and the iron yoke (right).

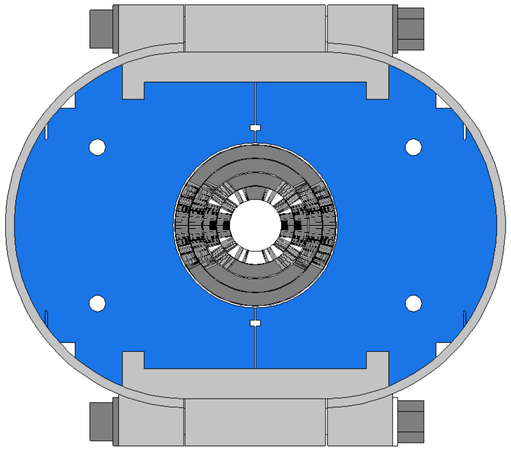

Figure 2. Cold mass cross-section with the "interim" 11 T dipole coil.

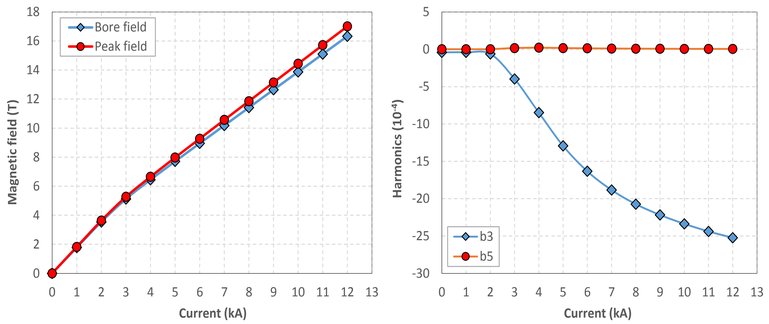

Figure 4. Magnet load lines (left) and low-order harmonics (right) as functions of current.

Table 2. Magnet design parameters at 4.2 K.

Parameter	Units	Interim	Optimal
Bore field at short sample limit	T	14.61	15.59
Peak field at short sample limit	T	15.12	16.23
Current at short sample limit, I_c	kA	9.07	11.40
Inductance at I_c	mH/m	31.86	25.37
Stored energy at I_c	MJ/m	1.31	1.65
Horizontal Lorentz force per quadrant at I_c	MN/m	6.01	7.28
Vertical Lorentz force per quadrant at I_c	MN/m	-3.70	-4.52

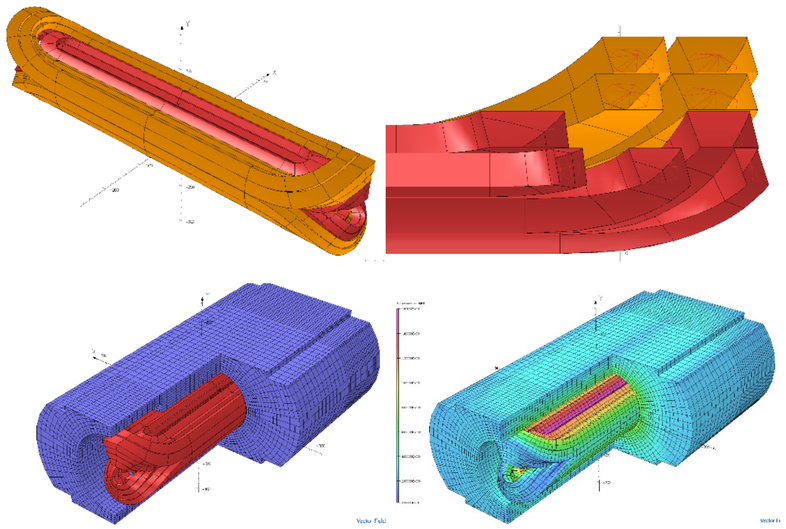

Figure 5. Complete coil (top left), the coil end cross-section (top right), iron yoke design (bottom left) and the field distribution in the coil and yoke (bottom right).

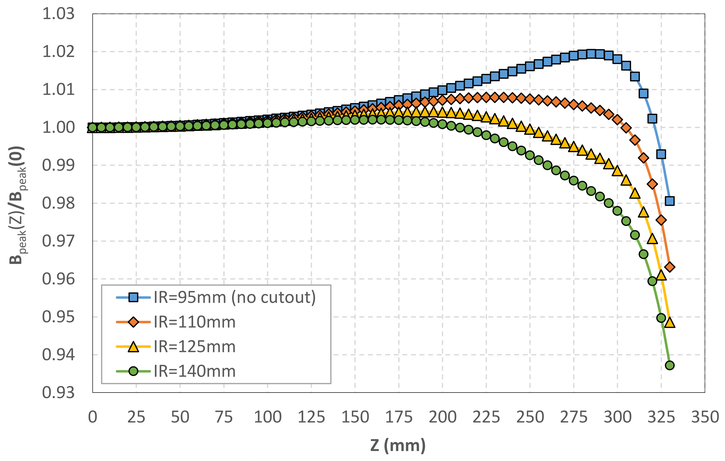

Figure 6. Ratio between the peak field in the coil end and the central section vs. the axial coordinate.

Structural Analysis

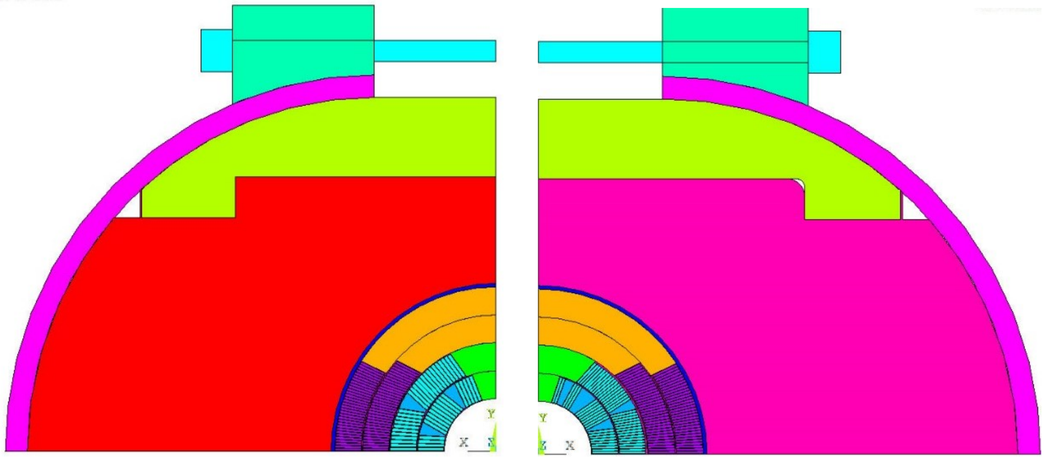

Figure 7. ANSYS model of 15 T dipole demonstrator with graded (left) and interim (right) coils.

Table 4. Material properties.

Structural element	Material	Thermal contr. (300-2 K), mm/m	Elasticity modulus, GPa		Yield stress, MPa	
			warm	cold	warm	cold
Coil (rad/azim)	Nb_3Sn Composite	2.9/3.3	35/20	40/40	n/a	n/a
Pole blocks	Ti-6Al-4V (layers 1 & 2)	1.7	115	125	650	>900
	SS, grade TBD (layers 3 & 4)	2.9	195	215	230	500
Wedges	SS 316	2.9	195	215	230	500
Coil-yoke gap	SS, grade TBD	2.9	190	210	230	500
Clamp	SS, grade TBD	2.9	195	215	520	850
Yoke	Iron 1045	2.0	210	225	350	>400
Skin	SS 304L	2.9	190	210	230	500
Bolt	SS, grade TBD	2.9	195	215	520	850

Table 5. Average azimuthal coil stress in pole and midplane turns of grader/interim designs (MPa).

Position in coil	Assembly		Cool down		B=15 T	
	Graded	Interim	Graded	Interim	Graded	Interim
Pole 1	100	100	130	110	0	0
Pole 2	64	60	79	75	12	8
Pole 3	85	75	105	82	27	18
Pole 4	96	85	119	97	75	68
Mid-plane 1	75	70	84	70	145	146
Mid-plane 2	84	80	114	100	121	122
Mid-plane 3	92	80	109	88	160	138
Mid-plane 4	93	80	118	94	153	127

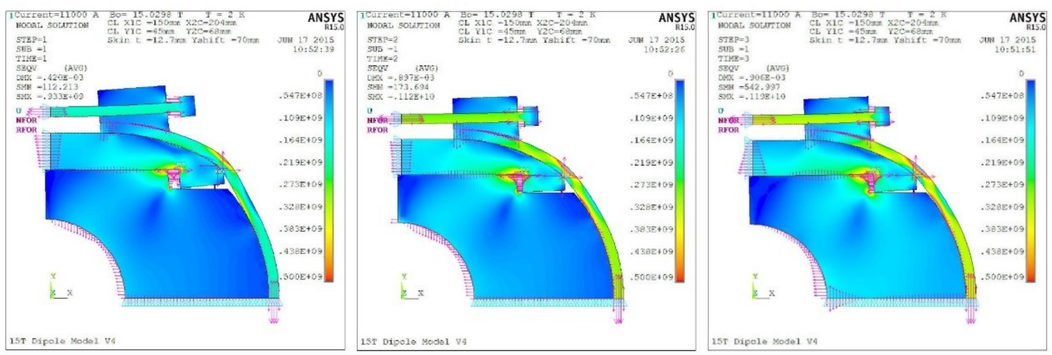

Figure 10. Stress distribution in the dipole mechanical structure.

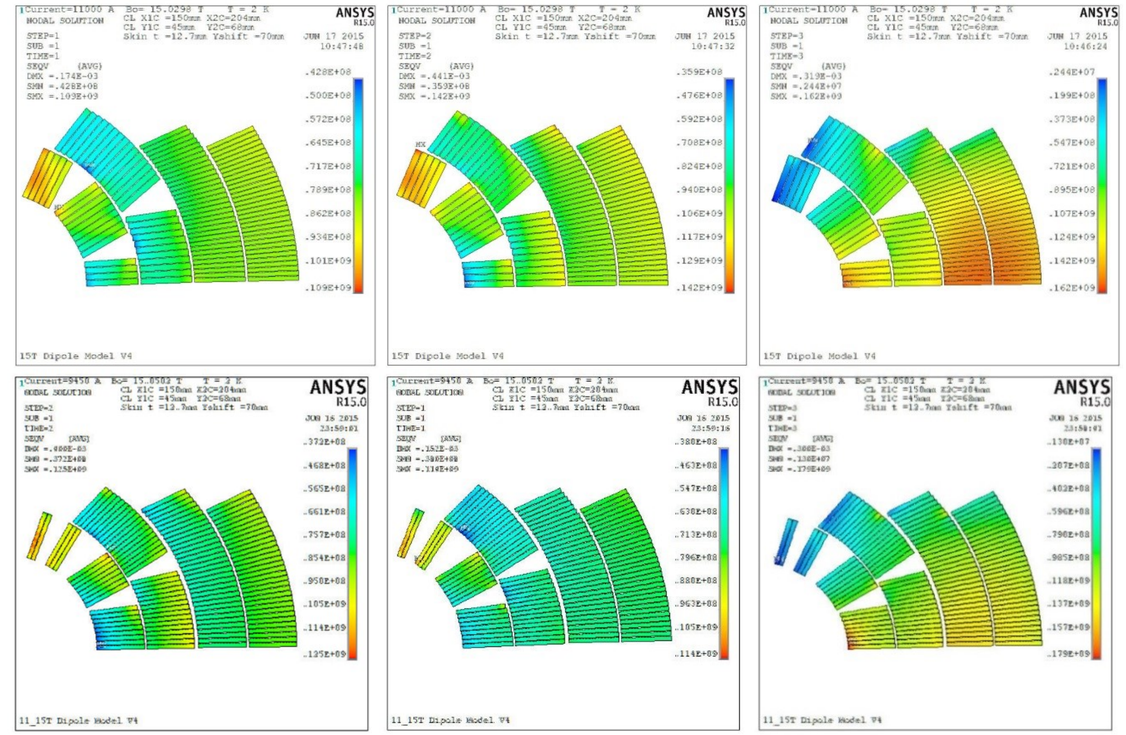

Figure 8. Stress distribution in the graded (top row) and interim (bottom row) coils.

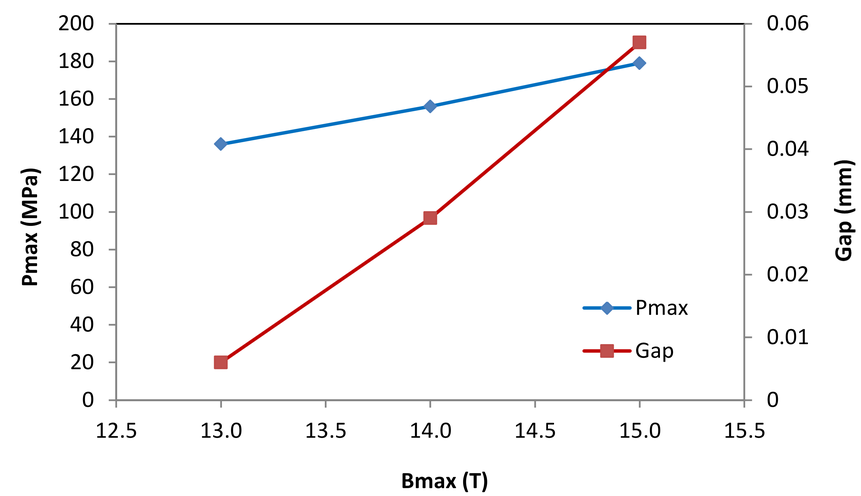

Figure 9. Maximum coil stress and coil-pole gap vs. the field in aperture for the interim coil design.

Table 6. Maximum stress in structural components.

Position in coil	Maximum Stress, MPa		
	Assembly	Cool down	B=15 T
Yoke	650*	760*	810*
Clamp	930*	1100*	1190*
Skin	580	760	830
Bolt	320	500	550

*number from elastic model with singularities