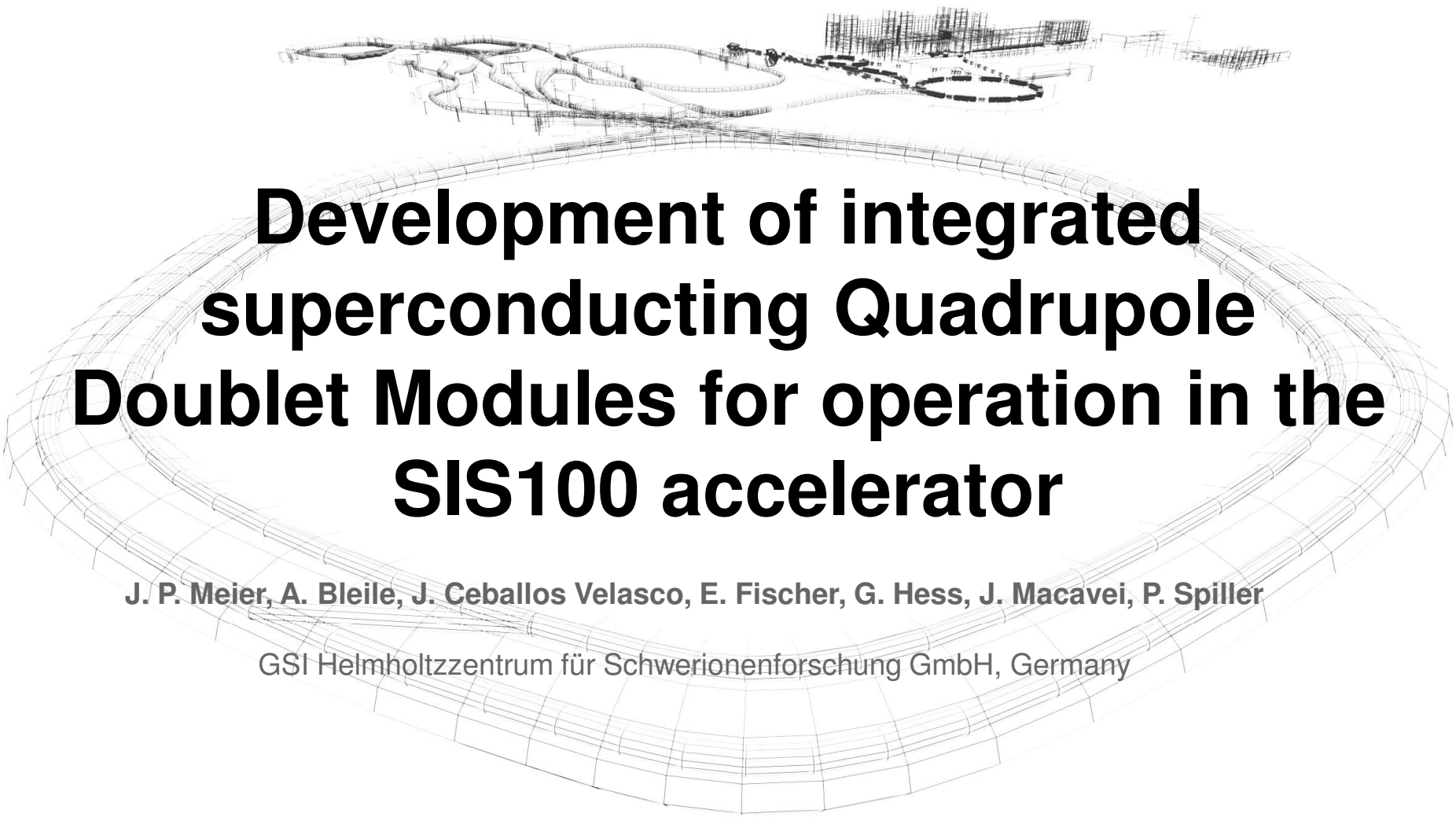

Development of integrated superconducting Quadrupole Doublet Modules for operation in the SIS100 accelerator

J. P. Meier, A. Bleile, J. Ceballos Velasco, E. Fischer, G. Hess, J. Macavei, P. Spiller

GSI Helmholtzzentrum für Schwerionenforschung GmbH, Germany

Content

- **Introduction to FAIR and SIS100**
  - Overview on FAIR
  - SIS100 Structure
- **Structure of SIS100 – Quadrupole Doublet Modules**
  - Typical assembly structure
  - Configurations of SIS100-QDMs
- **Mechanical calculation results and cryogenic cooling solution**
  - Displacement of magnet axis
  - Cryogenic cooling solution
- **Development and procurement of module integration**
  - Development structure of module integration
  - Procurement structure of module integration
- **Summary**

Introduction to FAIR and SIS100

***F**acility for **A**ntiproton and **I**on **R**esearch Project*
located at GSI Helmholtzzentrum für Schwerionenforschung GmbH, Darmstadt, Germany

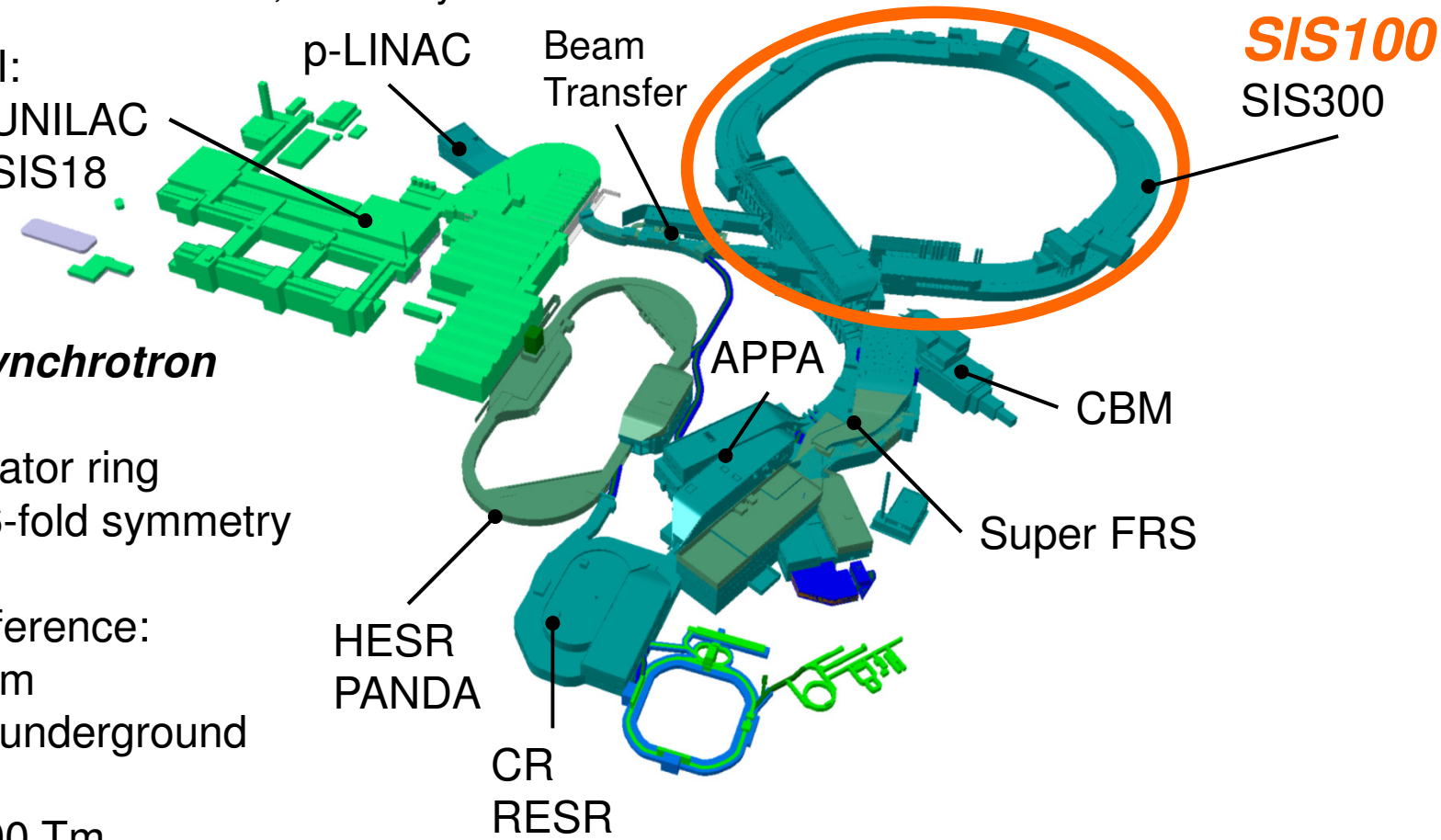

SIS100 Synchrotron

- Accelerator ring with a 6-fold symmetry
- Circumference: 1083.6 m 12.5 m underground
- Bρ = 100 Tm

Introduction to FAIR and SIS100

- ***SIS100 Structure***

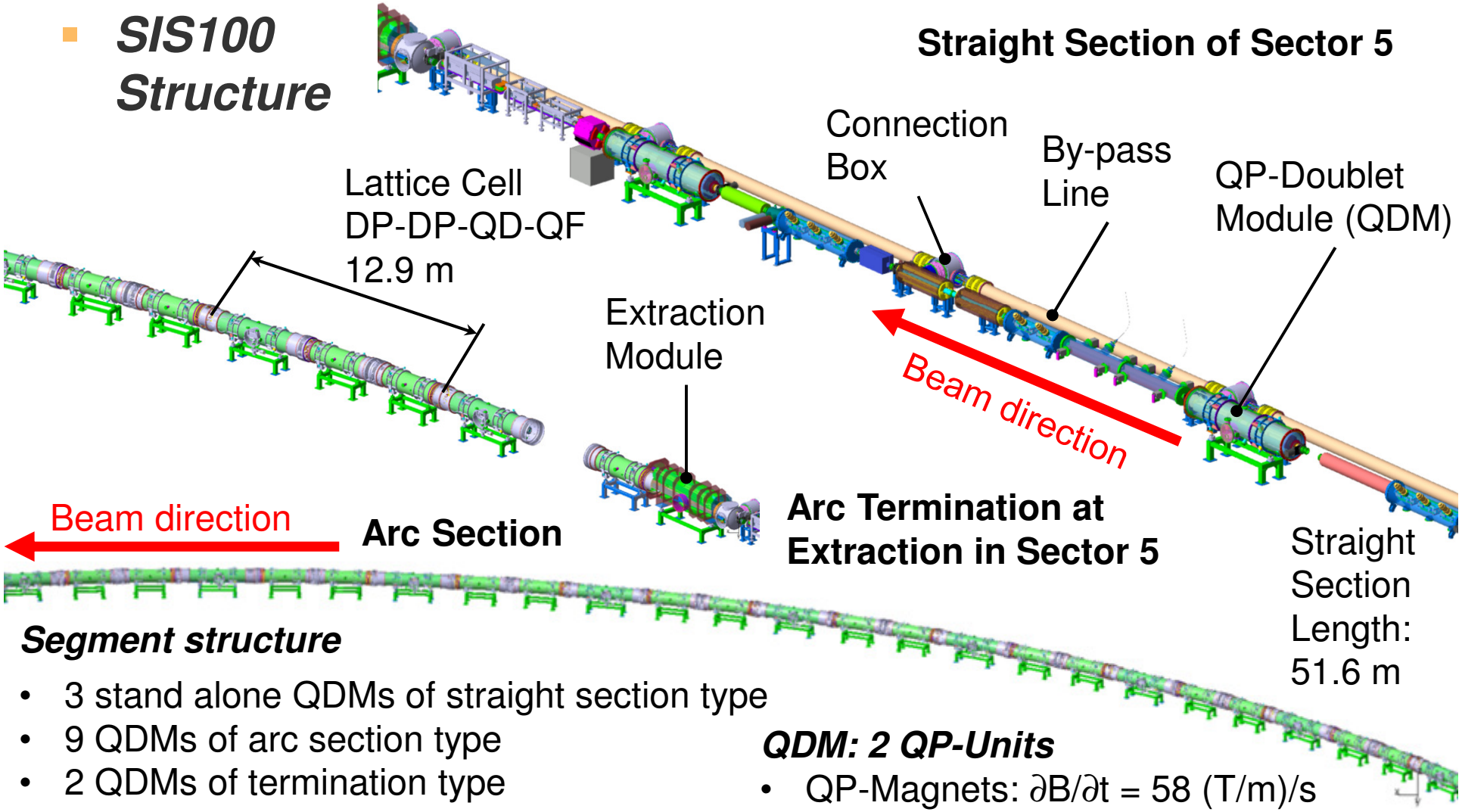

Segment structure

- 3 stand alone QDMs of straight section type
- 9 QDMs of arc section type
- 2 QDMs of termination type
- 18 DP-Modules

QDM: 2 QP-Units

- QP-Magnets: $\partial B/\partial t$ = 58 (T/m)/s
  B_{max}= 27,8 T

Structure of SIS100 – Quadrupole Doublet Modules

- ***Typical assembly structure*** **(Arc section module, integration)**

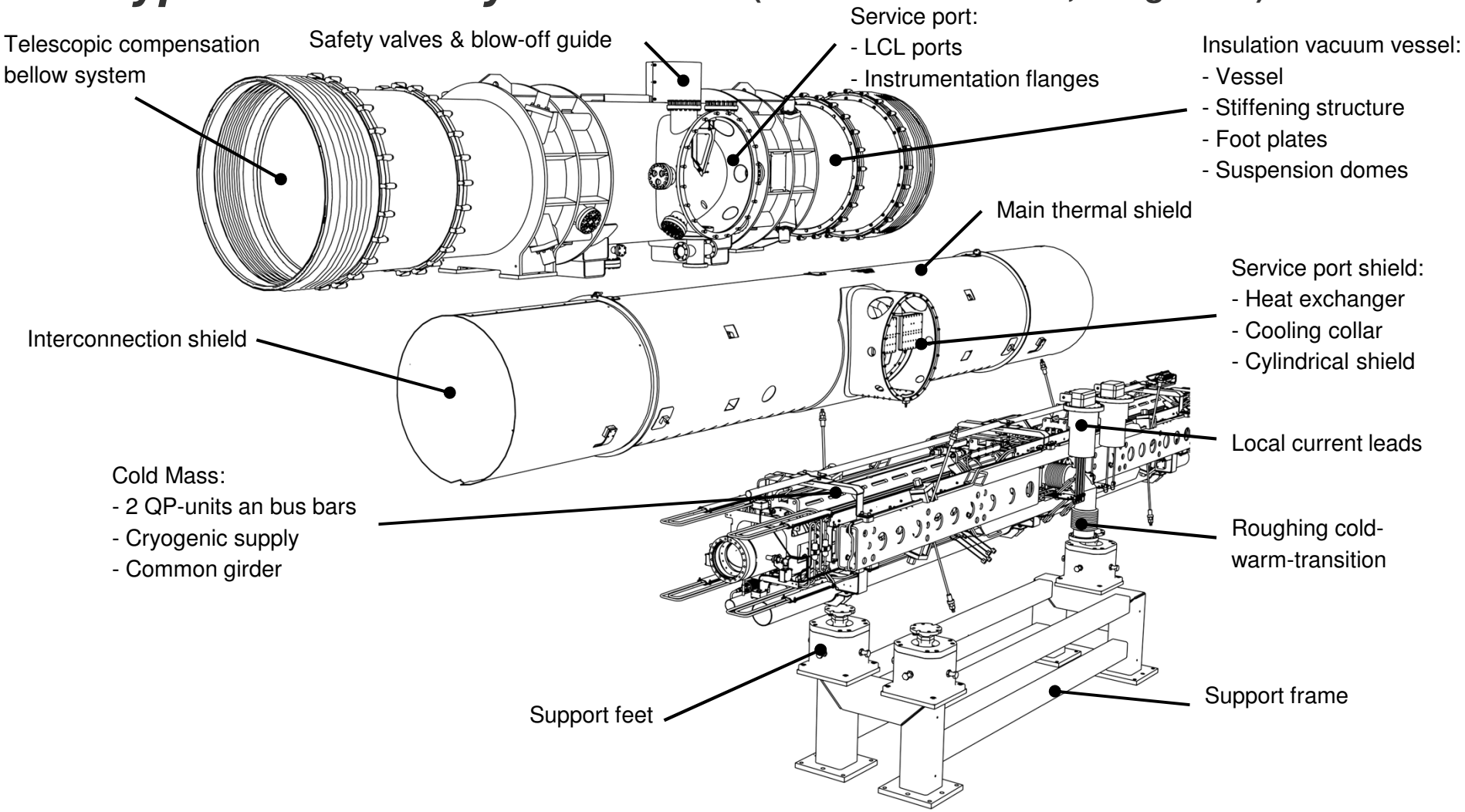

Structure of SIS100 – Quadrupole Doublet Modules

- ***Typical assembly structure*** **(Arc section module, cold mass)**

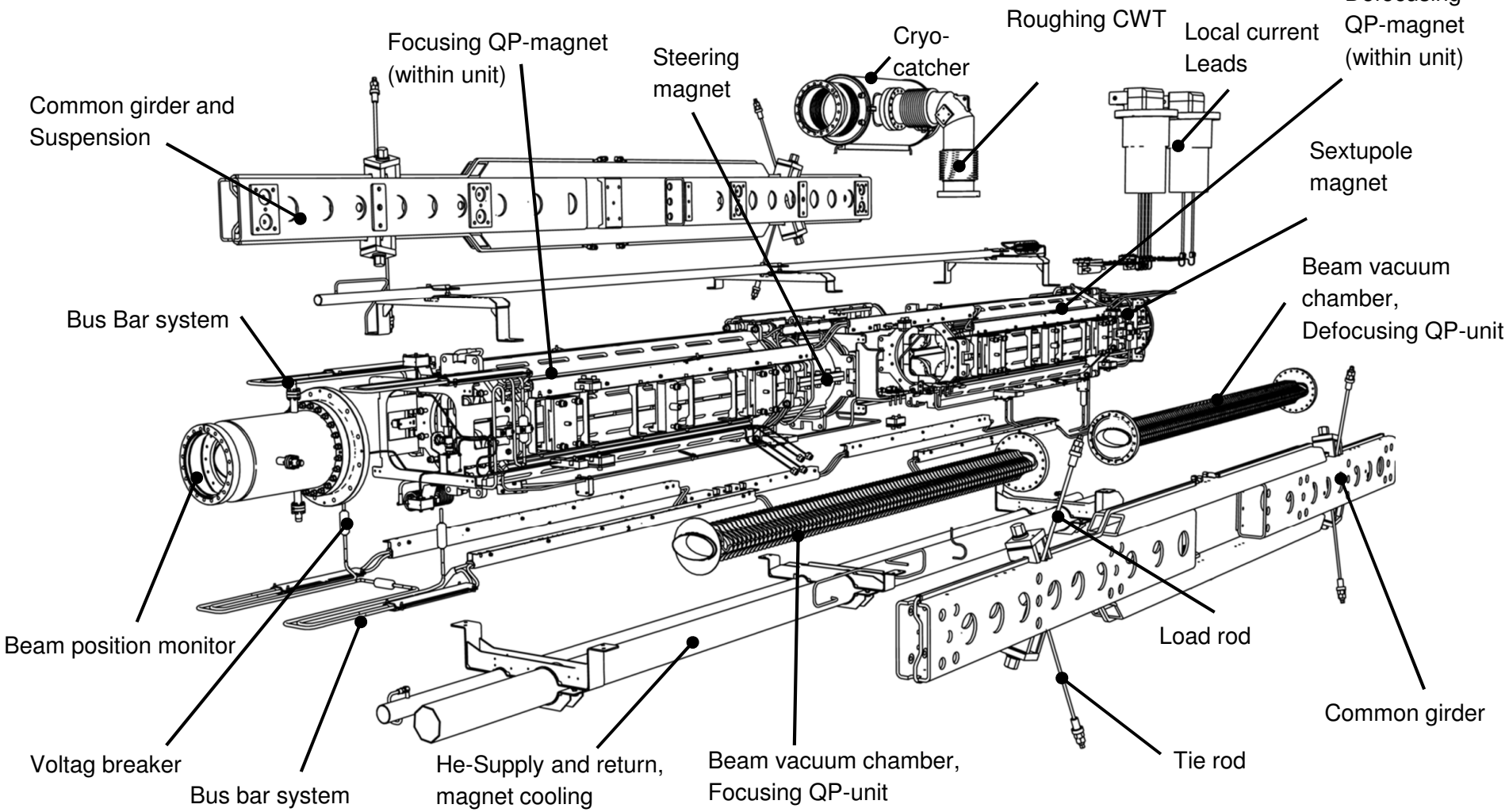

Structure of SIS100 – Quadrupole Doublet Modules

- ***Configurations of SIS100-QDMs*** **(Example: Type 2.4x)**

Extraction module cold mass

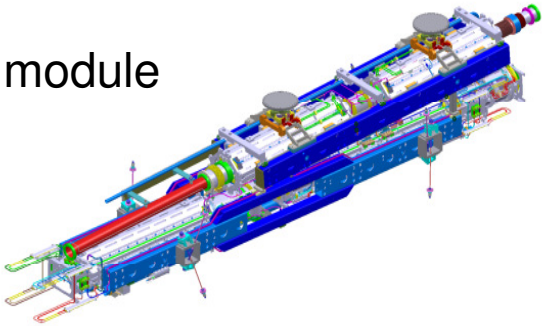

QDBx-T-SF2Mx and extraction branch

Integrated QDM

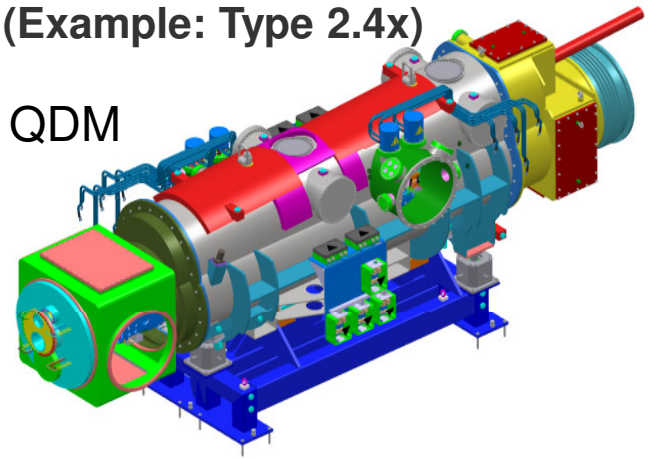

Unit Configuration			*Doublet Configuration*			
Upstream	**Centre**	**Downstream**	**Joined Name**	**Short Name**	**Quantity**	**IOL-Cell**
QDB	-TRP-	SF2	QDB-TRP-SF2	2.123	15	1,2,3
QDB	-TRP-	SF2	QDB-TRP-SF2s	2.13s	2	1,3
QDBb	-T-	SF2M	QDBb-T-SF2M	2.4	5	4
QDBx	-T-	SF2Mx	QDBx-T-SF2Mx	2.4x	1	4
VQD	-CR-	SF2B	VQD-CR-SF2B	2.5	6	5
BQD	-C-	SF1H	BQD-C-SF1H	1.6A	12	6, 10
VQD	-CR-	SF1B	VQD-CR-SF1B	1.7B	12	7, 11
BQD	-C-	SF2H	BQD-C-SF2H	2.8C	12	8, 12
BQD	-CR-	SF2J	BQD-CR-SF2J	2.9D	12	9,13
MQD	-C-	SF1Bb	MQD-C-SF1Bb	1.E	5	14
MQDi	-C-	SF1Bi	MQDi-C-SF1Bi	1.Ei	1	14

Abbreviations

QD Defocusing quadrupole
F1 Focusing quad. 1
F2 Focusing quad. 2
B Beam position monitor
V Vertical chrom. sextupole
H Horizontal chrom. sextupole
S Steering magnet
M Multipole corrector magnet
C Cryo-ion-catcher (collimator)
T Drift tube
b modified busbars
i injection Y cryostat
x extraction Y cryostat
s Star shape chamber
P Cryo-sorption-pump
R Roughing pump with CWT

Mechanical calculation results and cryogenic cooling solution

- ***Displacement of magnet axis*** **(Arc section module, type 2.5)**

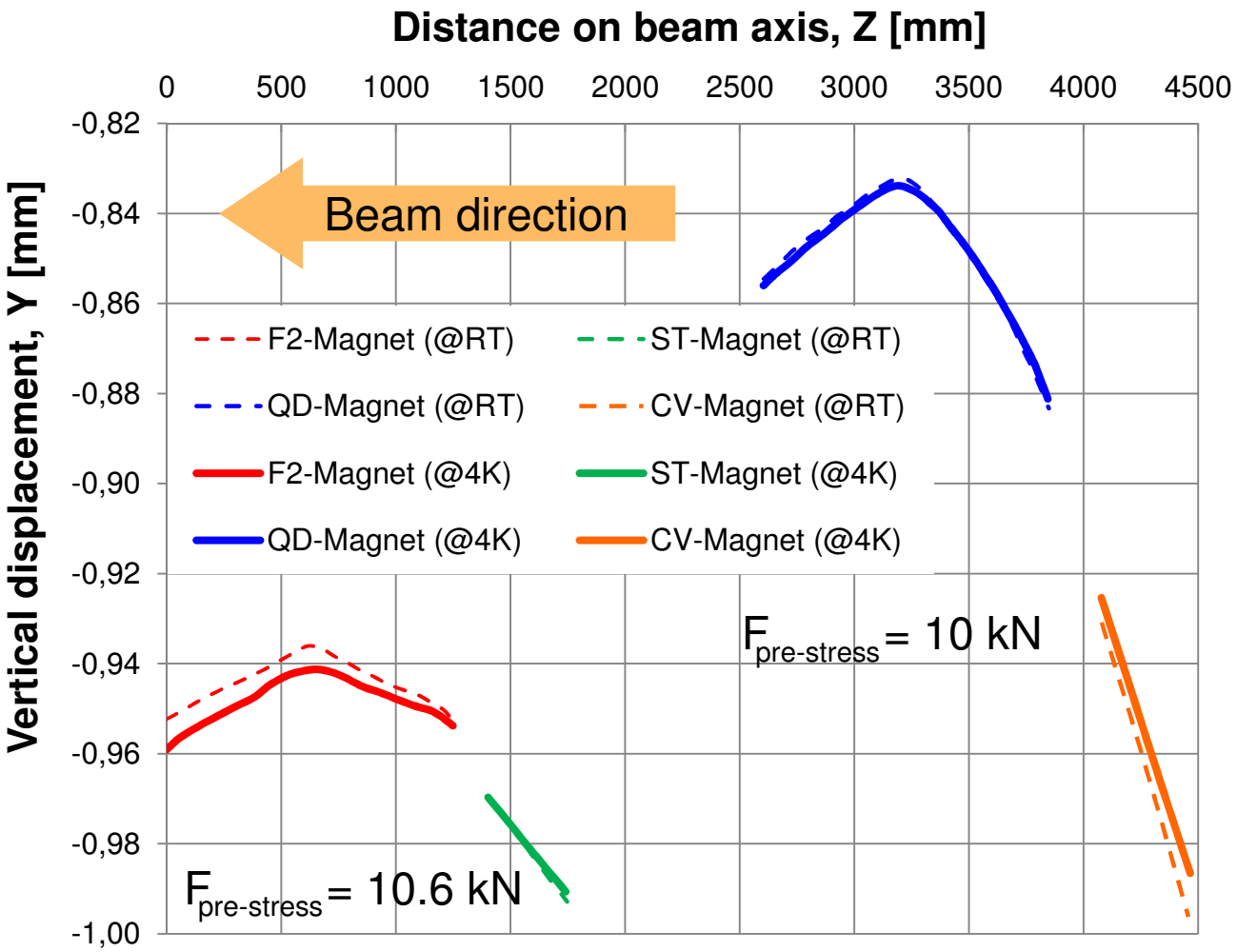

- RT → 4K
  allowed displacement Δx, Δy:
  ±125 µm for QP-magnets
  ±175 µm for corrector magnets
- Results of FEM engineering calculation
- Ion-optical axis are to be aligned one another
- Different pre-stress in US- and DS position to equalize overall tilt
- Evaluation of displacement along the ion-optical axis of the QDM
- Diffrence in displacement between RT an 4K-operation appears as negidible
- Pre-compensating offset of -0.9 mm is required
- Horizontal displacement below 10µm
- Displacement of fiducial target seats is expected to be less then 20 µm

Mechanical calculation results and cryogenic cooling solution

Cryogenic cooling solution

Cooling scheme of SIS100 arc (right side figure)

- DP and QD - modules connected in parallel
- common He-supply: sub-cooled LHe: T1=4.5 to 4.6 K, p=1.5 to 1.6 bar(a)
- Point 2, 2-phase He: T2 = T3 = 4.3 to 4.4 K, p2=p3=1.1 to 1.2 bar(a)
- Point 3: 2-phase or vapour, depending of SIS100 operation mode
- Point 2-2': Re-cooler

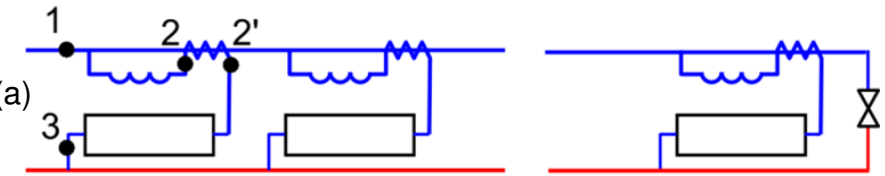

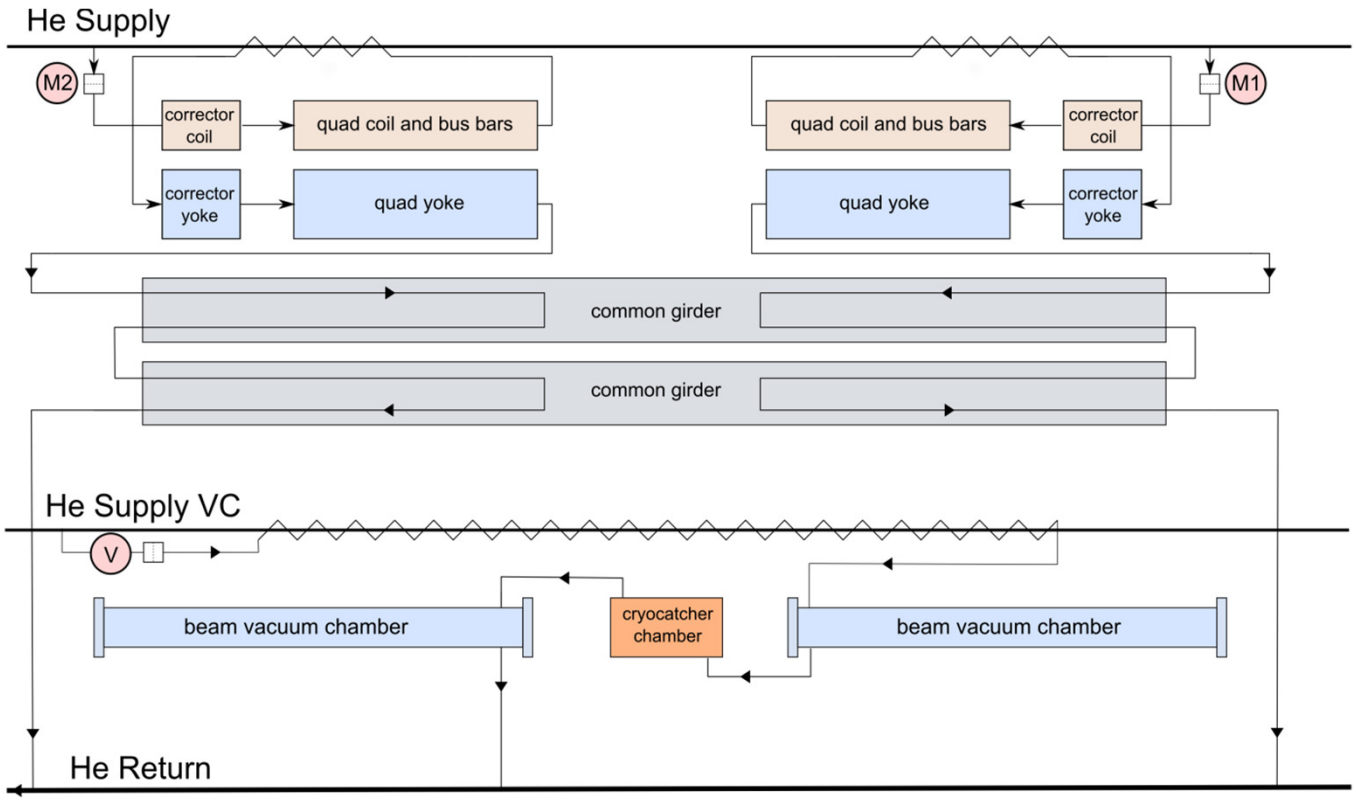

QDM cooling scheme (Arc section module, left side figure):

- two parallel flow channels (M1, M2)
- Corrector magnets in series with QP-magnets
- common girder in series
- separate supply of vacuum chambers and cryo-catcher (V)
- flow restrictors at inlet of cooling channels
- hydraulic resistanec to be tuned for fitting QP-units to each other and to DP-units

Development and procurement of module integration

- ***Development structure of module integration***

Basic development of type 2.5 by GSI

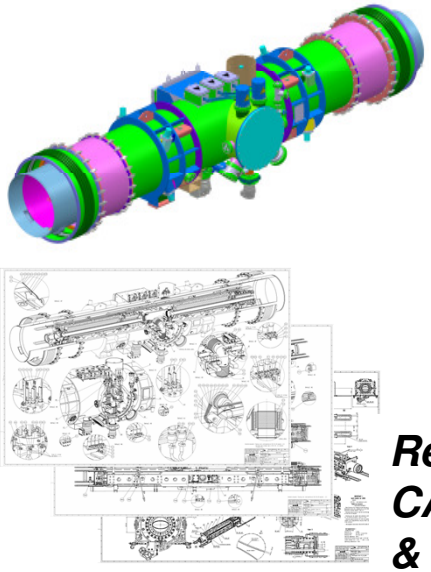

Released CAD-Model & drawings

Series development of remaining configurations by an engineering partner

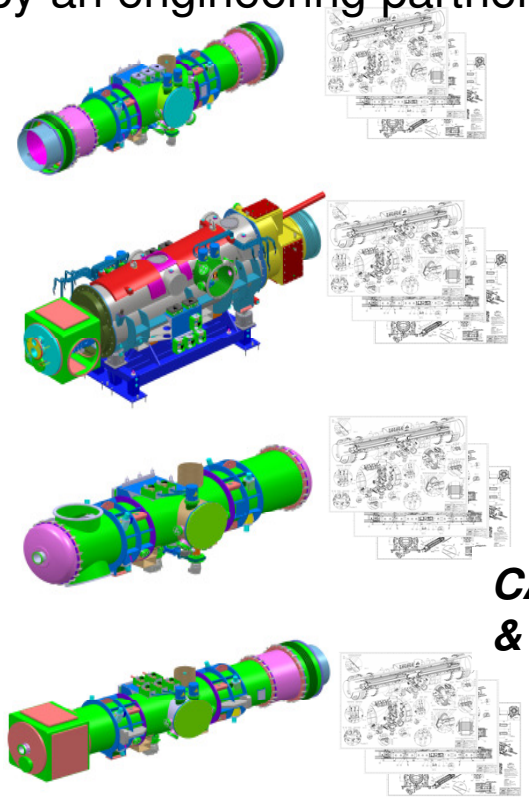

CAD-Model & drawings

Revision Process by GSI:
Production ready design of all configurations

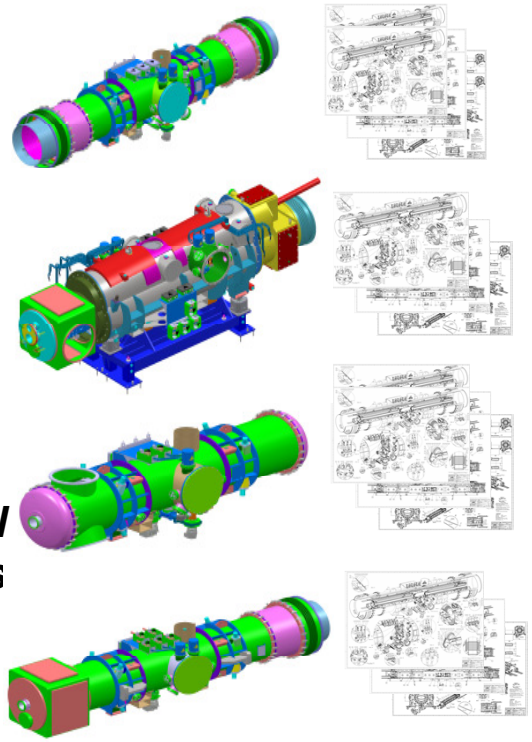

Development and procurement of module integration

- ***Procurement structure of module integration***

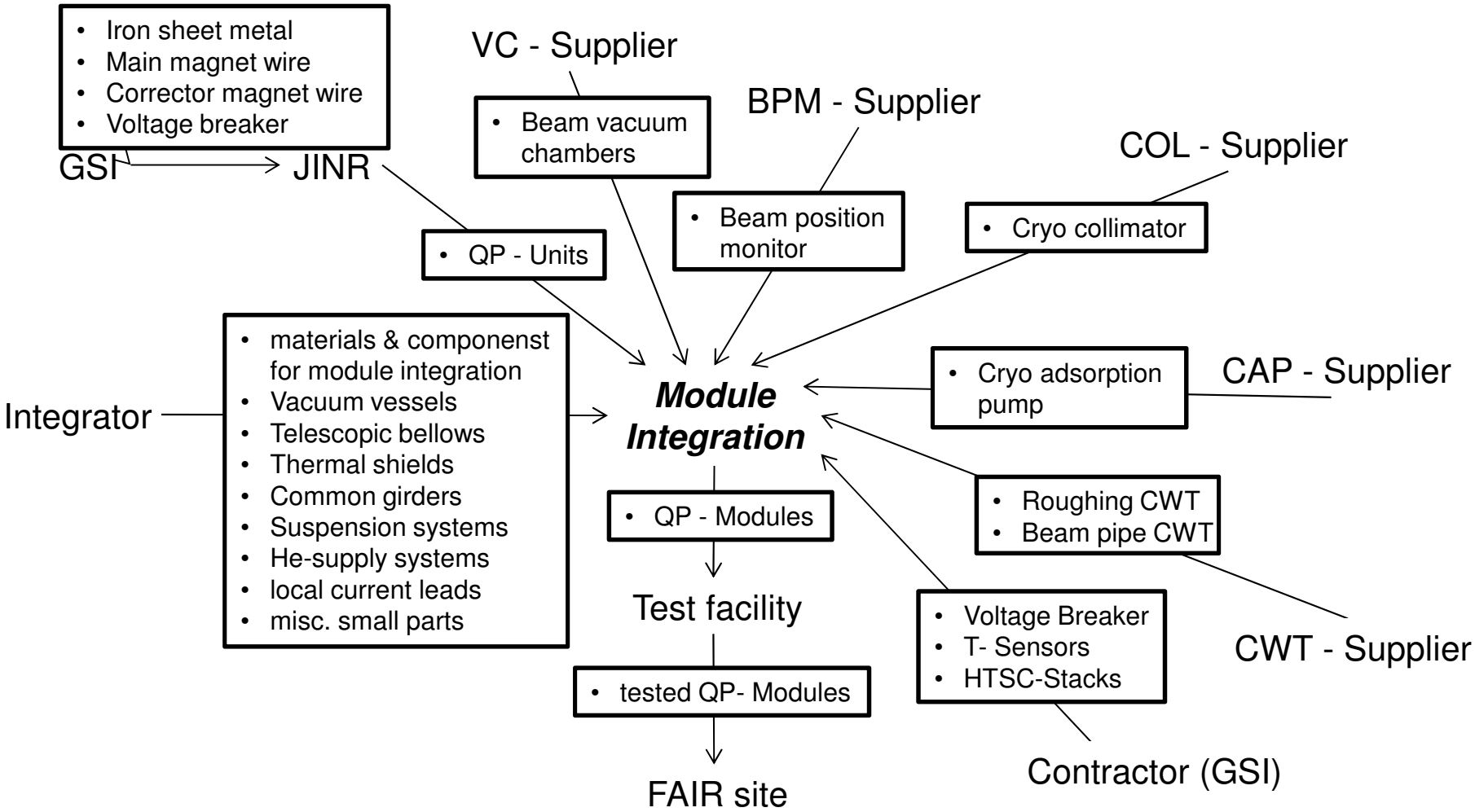

Summary

- The new and unique heavy ion accelerator SIS100 is built at FAIR with challenging requirements on QP-magnets.
- 83 Integrated Quadrupole doublet modules in 4 categories and 11 configurations with 2 special module types are currently in development.
- Stability requirements are expected to be met under operation conditions, by pre-compensating predictable displacements.
- Cooling concept based on 2-phase cooling with parallel cooling channels and is implemented in the QDM design.
- Tuning of flow ressitance is needed, to fit units to each other and to the DP-modules.
- Design phase for manufacturing design is proceeding. A design review will be established at GSI.
- Procurement is distributed to multiple supplyer. JINR deliveres the core components, QP-units with correctors.
- An integrator shall build the cryostat system and assemble the whole modules.
- The testing will be performed at an dedicated test facility prior to final tunnel installation.

Thank you very much for your interest and your kind attention!

Jan Patrick Meier

The PBMT – Team for FAIR@GSI:

V. Bezkorovaynyy, A. Bleile, J. Ceballos-Velasco, E. J. Cho, E. Fischer, W. Freisleben,N. Joshi, F. Kaether, B. Koerber, V. Marusov, F. Marzouki, J.P. Meier, A. Mierau, H. Mueller, H. Raach, P. Schnizer, K. Sugita, P. Szwangruber, C. Roux, A. Warth

& GSI-department ENMD