FAIR Cryogenic System

Holger Kollmus

GSI Helmholtzzentrum für Schwerionenforschung GmbH
Planckstraße 1
64291 Darmstadt, Germany

Outline

- Introduction
- Cryogenic topology
- FAIR machines
  - SIS 100
  - SuperFRS
- Refrigerator
- Summary & Outlook

FAIR – Facility for Antiproton and Ion Research

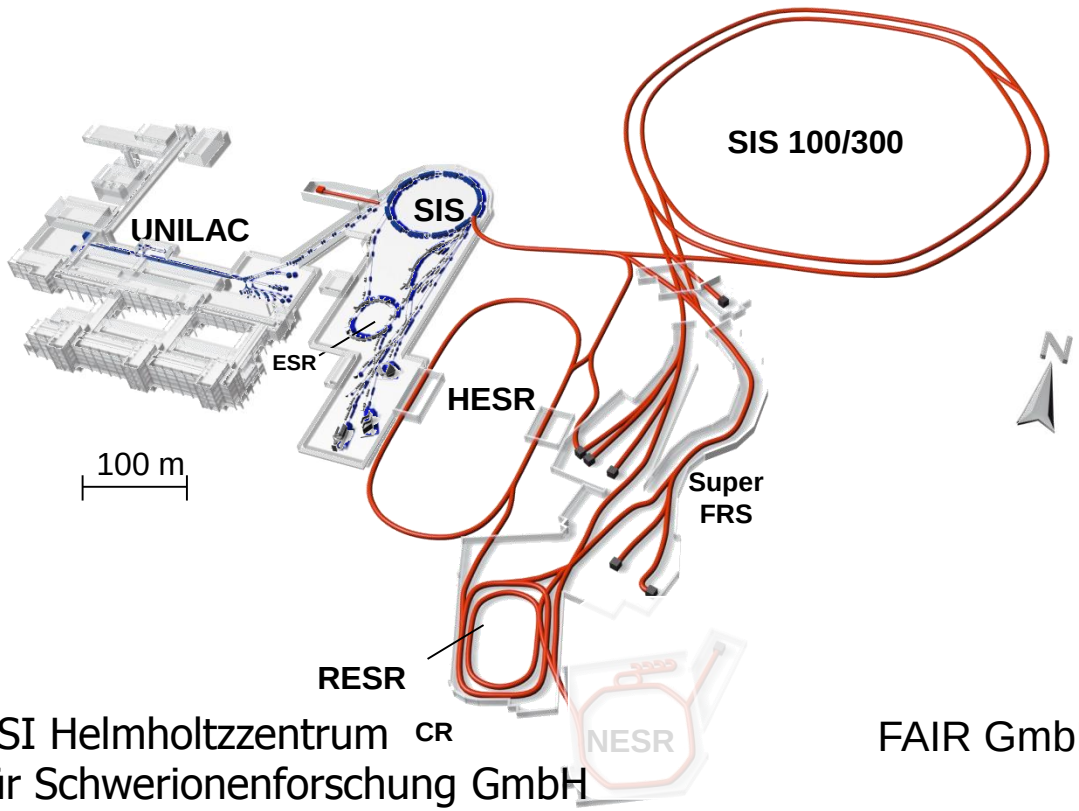

GSI-Today

- **Protons to Uranium**
- **max 1 GeV/u Uranium and 2 Gev/u for Neon**

GSI in future / FAIR

- **Rare isotopic beams**
- **Anti protons**
- **Higher Beam Current**
- **At higher energies**

GSI Helmholtzzentrum
für Schwerionenforschung GmbH
founded 1969
90 % German Federal Government
1350 employees
2 superconducting detectors: ~300 W@4.4K

FAIR GmbH

founded 2010
9 countries signed
~75 % stake holder GSI
large superconducting facility: ~25 kW@4.4K

FAIR – machines and experiments

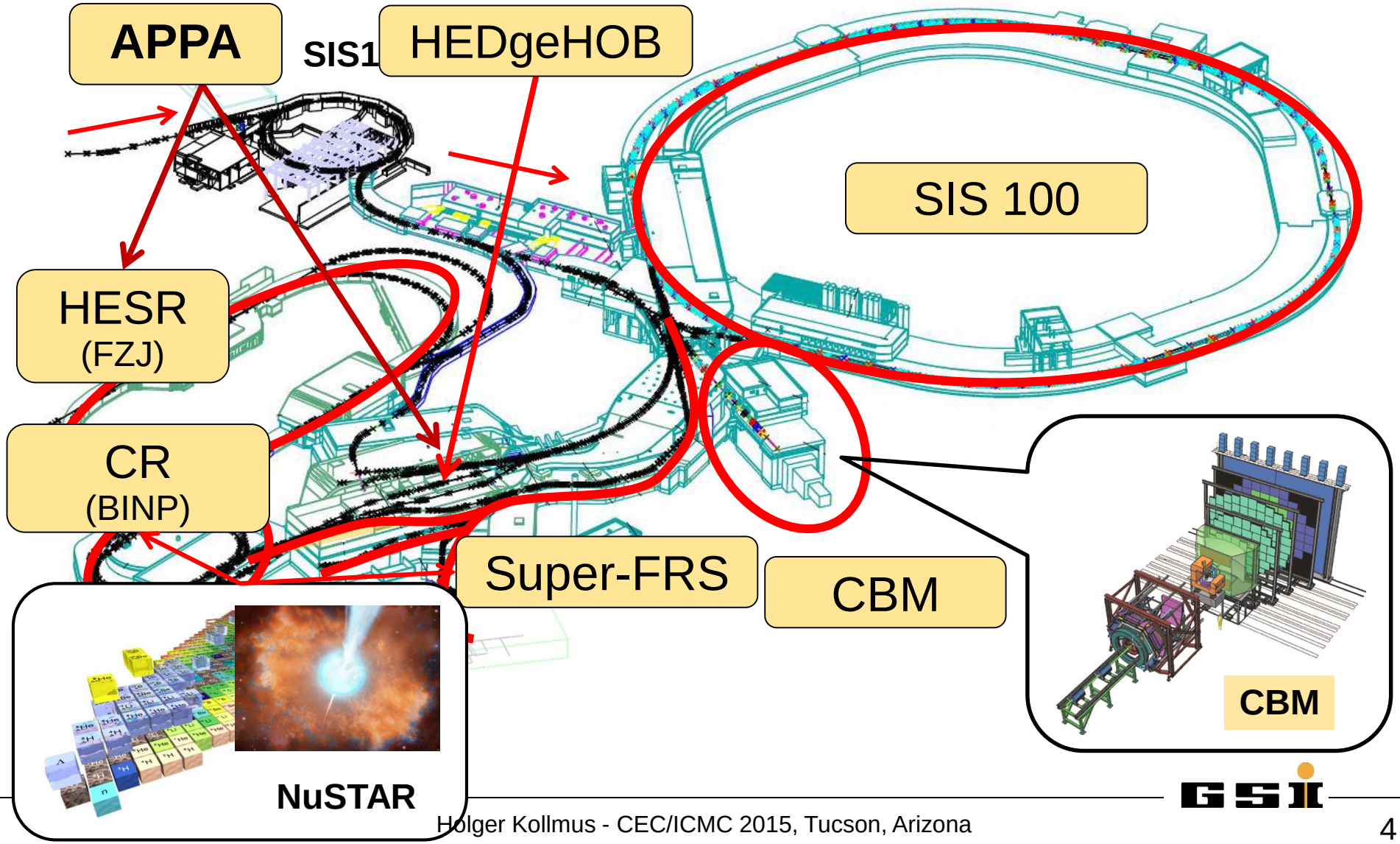

Cryogenic topology

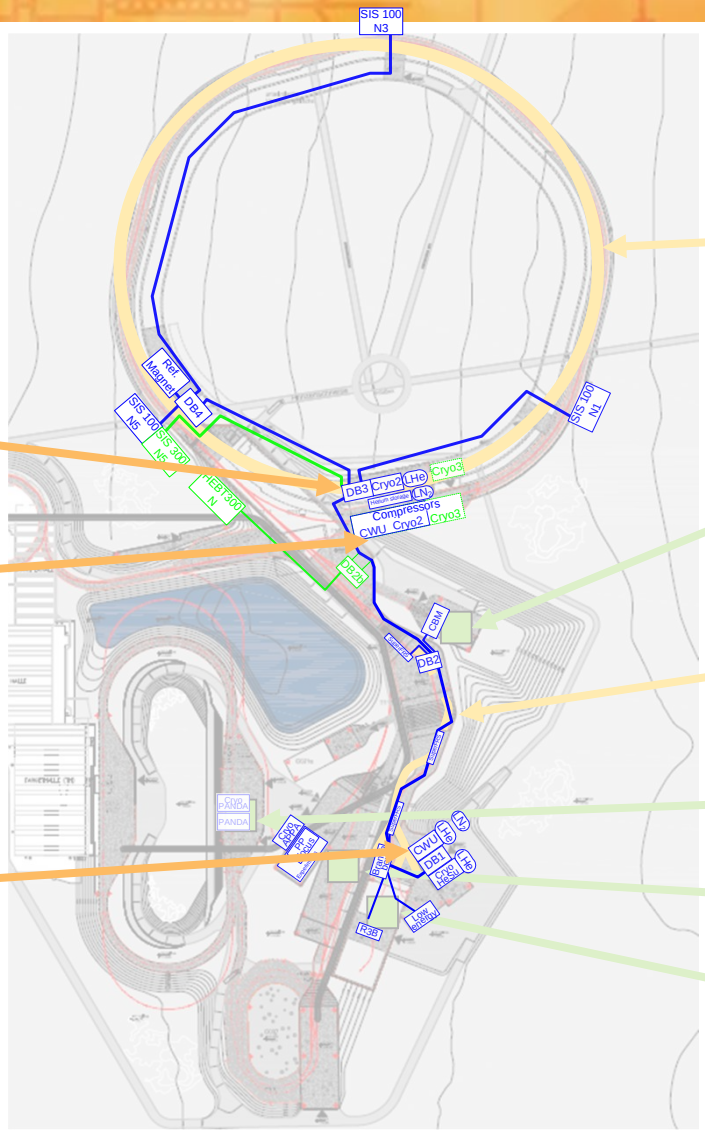

SIS 100
(SIS 300)

CRYO plant: CRYO2

common
compressor station

CBM

SuperFRS

Cool down/
Warm up **U**nit

(Panda)

APPA

CWU

R3B

Challenges for the cryogenic supply of SIS100 and SuperFRS

Stand: Jan 15 (WrUT values)

SIS100

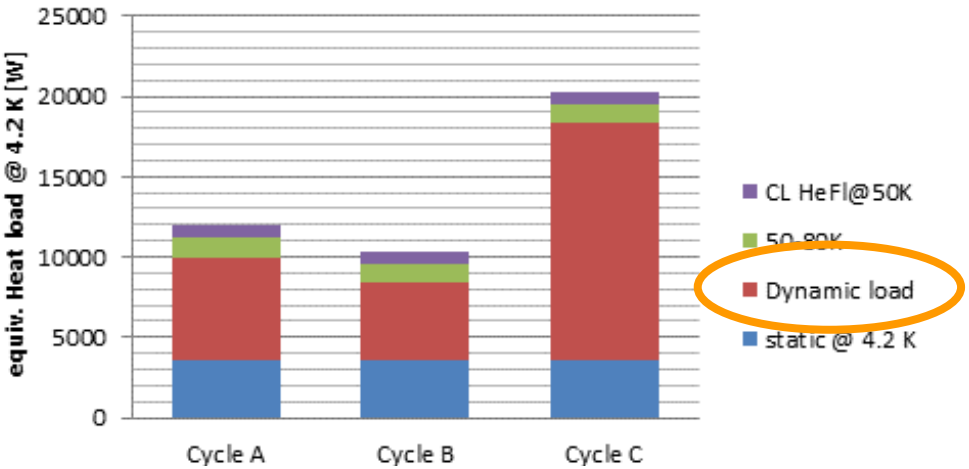

Reference cycles:
Proton cycle, HI cycle (long extraction), triangular cycle

mixed cycles will cover the full range

Cold mass: 400 t

Helium inventory: 1.3 t

SuperFRS

Static heat loss	4.5 K [W]	50 K to 80 K [W]	Liquefaction [g/s]
Magnet cryostats	579,3	5487	6,20
Local cryogenics	593,1	4826	
Total	**1172**	**10313**	

4K equivalent	~3000 W
Transfer line DB3 <-> DB2	300 W
LEB	700 W
Sum	4000 W

Cold mass: 1300 t

Helium inventory: 5.9 t

FAIR – SIS100- Magnets

iron dominated magnet design:
dipole: 1.9 T, 4 T/s @ 1 Hz; 109 pcs.
quadrupole module: 27 T/m; 84 pcs.

Single cable (13 kA)

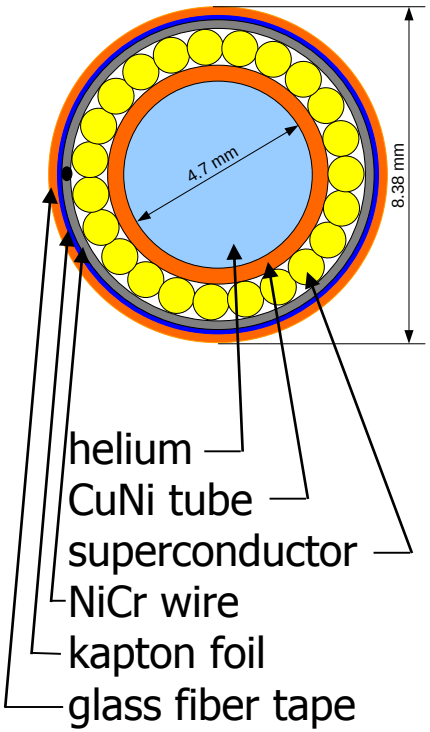

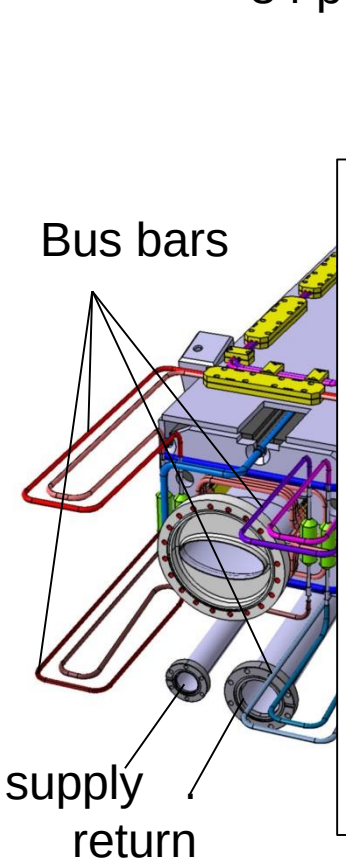

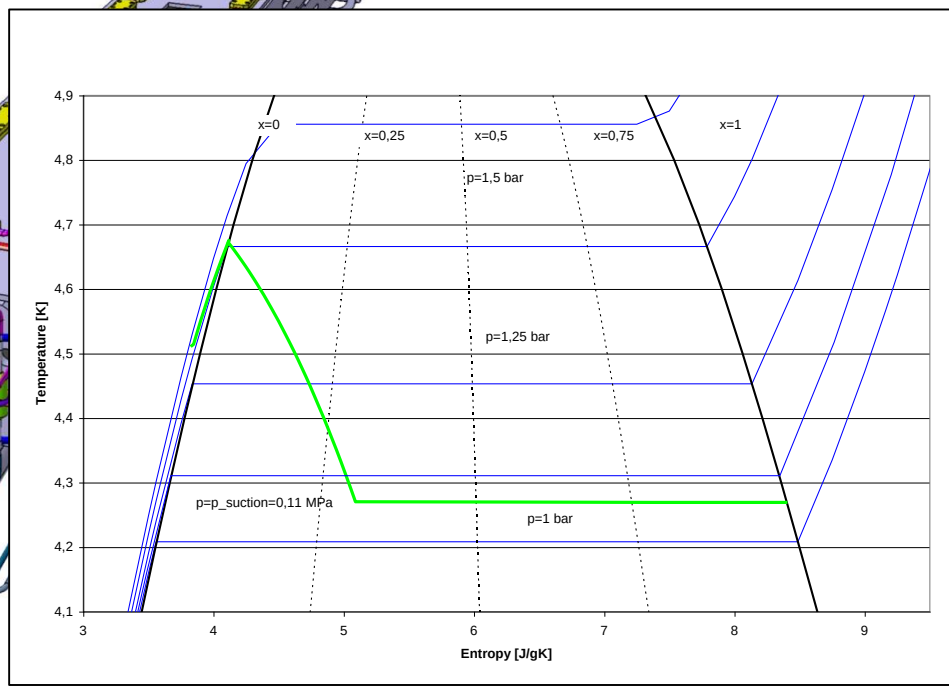

T-s diagram for helium flow in coil

Details: FAIR – Technical Design Report, July 08

FAIR – SIS100- supply system

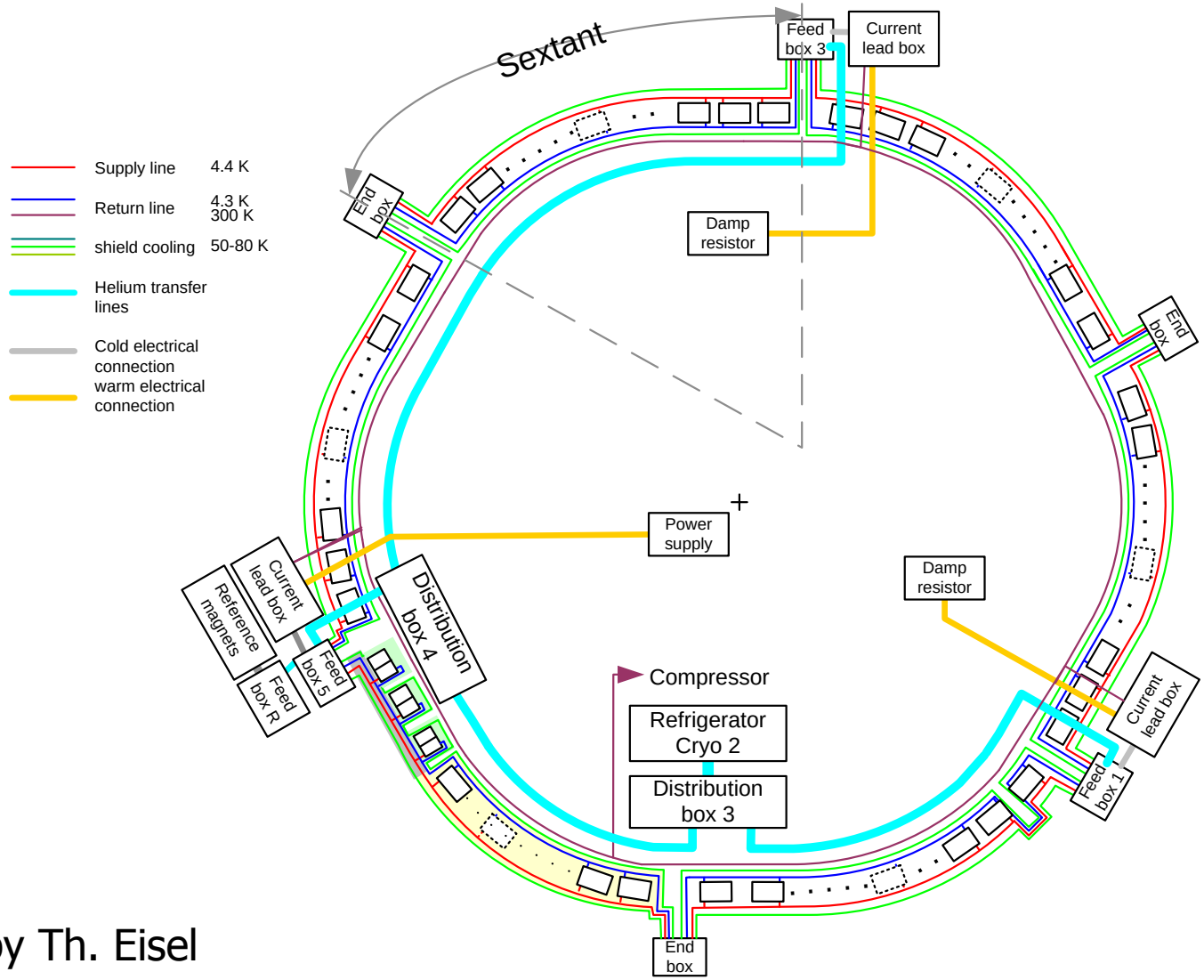

Talk by Th. Eisel

FAIR – SuperFRS- Magnets

iron dominated magnet design:

dipole:	0.15 - 1.6 T;	21 pcs.
quadrupole:	1-10 T/m;	80 pcs.

multiplet:
Total mass: > 50t
cold mass: ~ 37t
current: ~250 A
Helium inventory: ~ 1500 l
heat load: ~ 30 W
no ramping

31 pcs.

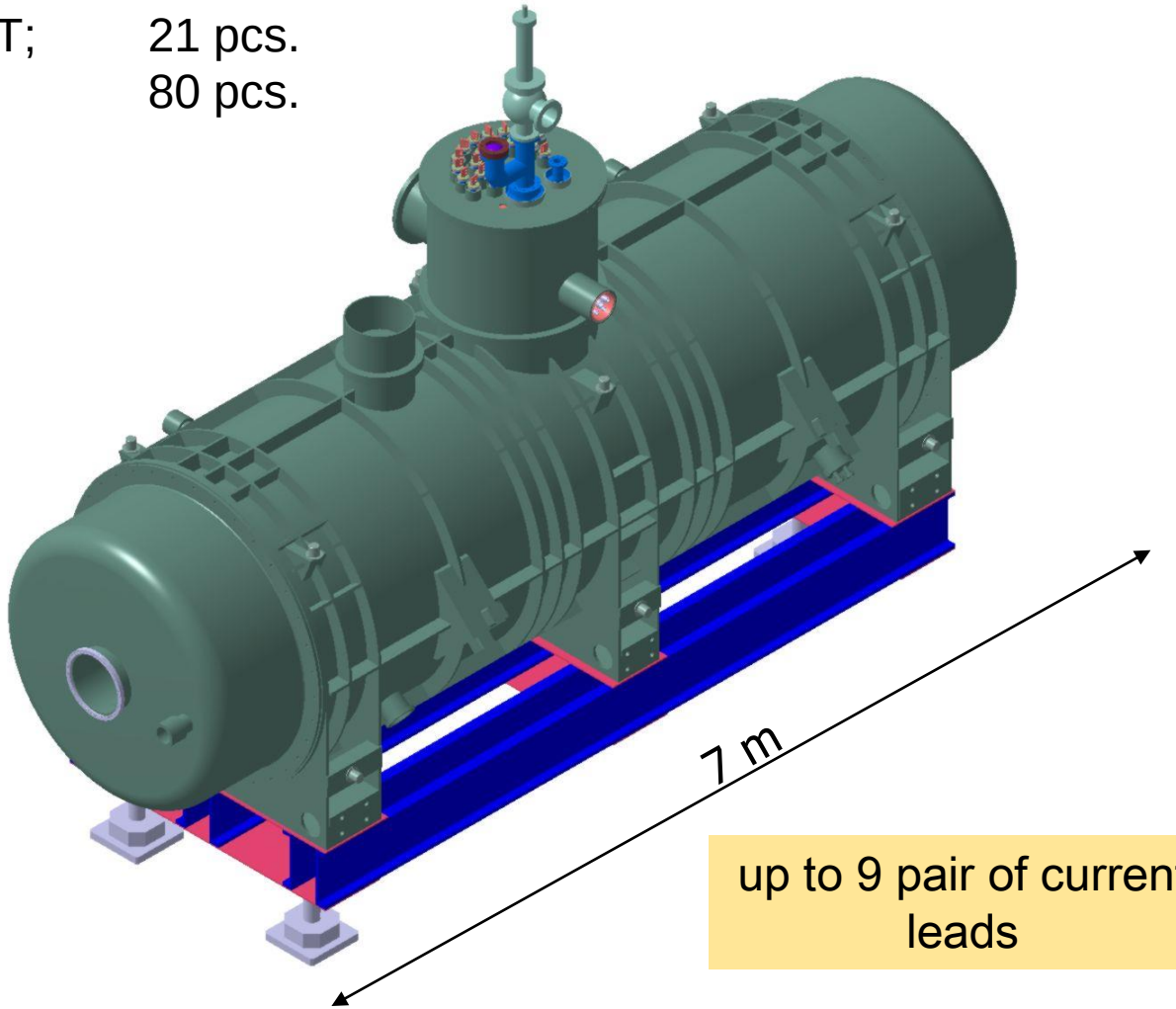

up to 9 pair of current leads

Details: FAIR – Technical Design Report, July 08

Refrigerator Options with 25 kW Overall Capacity

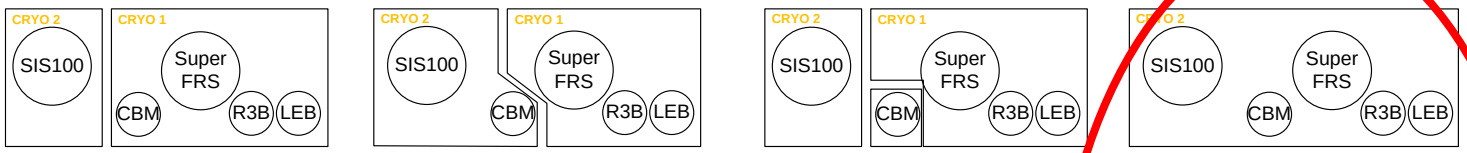

	2 plants	2 plants Transfer line	2 plants Temporal plant	1 common plant Transfer line
CBM supply*	Local cryo SuperFRS has to be finished	Independent from SuperFRS installation	Independent from SuperFRS installation	Independent from SuperFRS installation
Precooling Up-warming	Included in Cryo1	Included in Cryo1	Included in Cryo1	Additional unit for SuperFRS
Schedule	Cryo 1 shift is possible	Cryo 1 shift is possible	Cryo 1 shift is possible "Selling" of small plant	
upgrade	transfer line 3. plant	3. plant	transfer line 3. plant	2./ 3. plant
costs	37.1 M€	39.6 M€	39 M€ (incl. CBM plant)	38.7 M€ (34.7+2.5+1.5)

- Planned cooling capacity for first cryo plant approx. 25 kW@4.4K
- Pre-cooling by additional 80K circuit. (LN_2; Brayton machine)
- Without additional cooling: approx. 23 kW

FAIR Cryo 2 – CWU Interaction

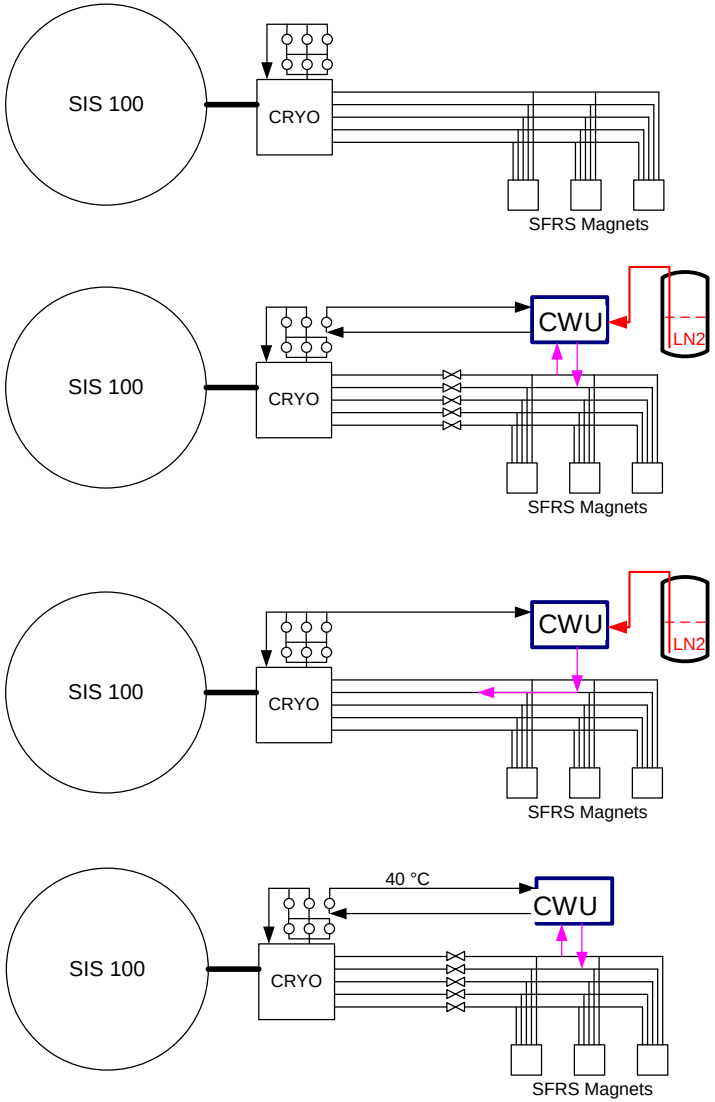

Normal operation

Series Test Facilities, Linde KT

- 700 W@4.4K; 6g/s; 2000W@50K
- Ready for magnet testing
- SIS 100 dipoles, quadrupoles and SuperFRS Magnets can be tested

HeSu in Operation

- Liquefaction rate ~ 20+ l/h
- 3000 l LHe storage
- Commissioning (SAT) done

Summary & Outlook

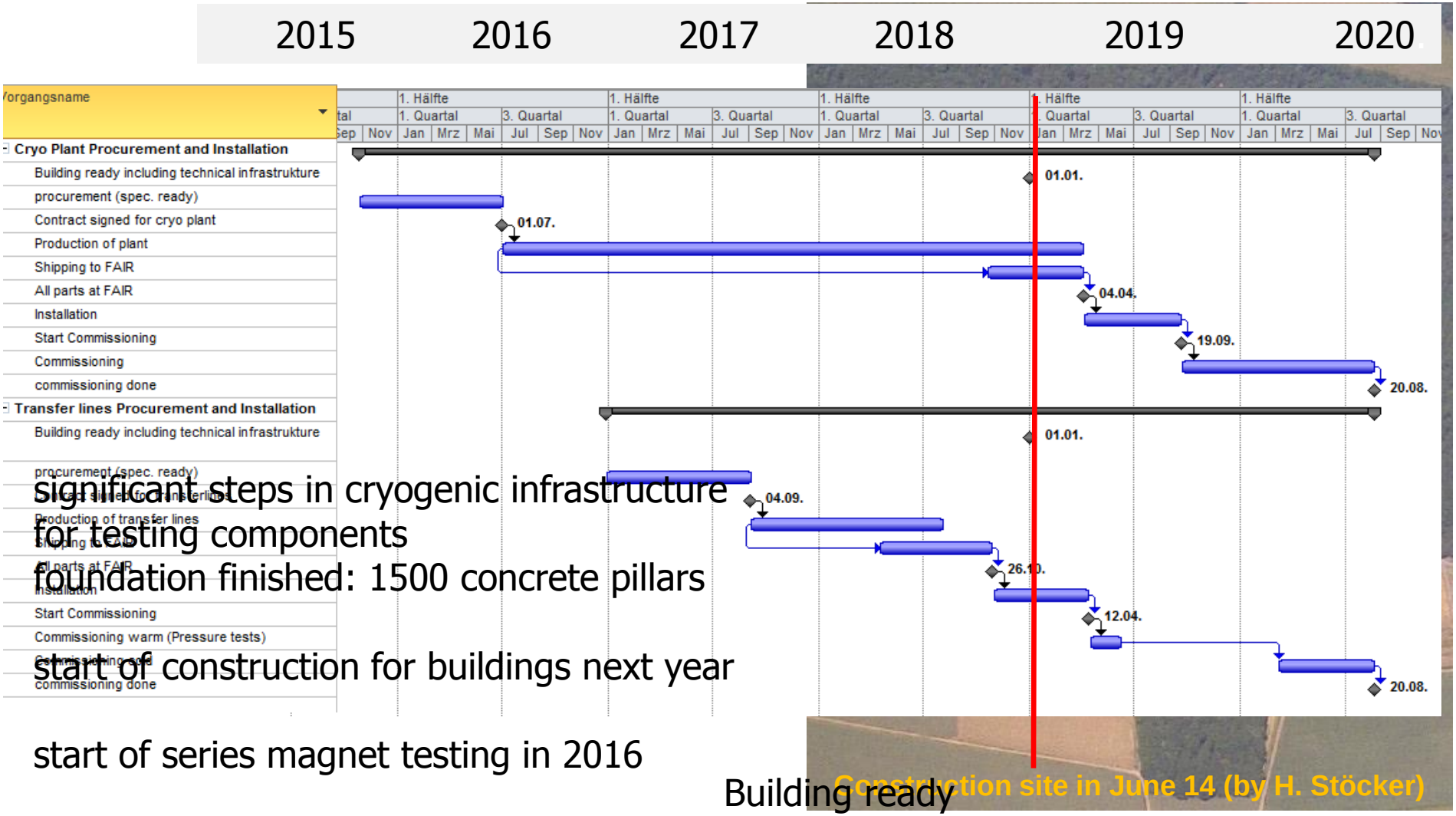

Construction site in June 14 (by H. Stöcker)

significant steps in cryogenic infrastructure for testing components

foundation finished: 1500 concrete pillars

start of construction for buildings next year

start of series magnet testing in 2016

Building ready

first experiments in 2021