PROCEEDINGS OF SCIENCE

THE ARCADE PROJECT

L. Valore*[ab], M. Buscemi[ab], M. Cilmo[ab], M. Coco[cd], C. Crook[e], A. L. Cummings[e], G. Dughera[d], J. Eser[e], F. Guarino[ab], M. Iarlori[f], M. Marengo[d], V. Rizi[f], A.S. Tonachini[cd], L. Wiencke[e]

[a] *Università degli Studi di Napoli, Italy*
[b] *Sezione INFN di Napoli, Italy*
[c] *Università di Torino, Italy*
[d] *Sezione INFN di Torino, Italy*
[e] *Colorado School of Mines, Golden, Colorado*
[f] *CETEMPS/DSFC Università degli Studi dell'Aquila, Italy*

E-mail: valore@na.infn.it

The Atmospheric Research for Climate and Astroparticle Detection (ARCADE) project aims to a better comprehension of the limits of applicability, systematics and possible enhancements of the typical techniques used for the measurement of the aerosol attenuation profiles of UV light in cosmic rays and gamma rays experiments. Aerosols are indeed the most variable component in the atmosphere on a short time scale, and experiments based on the detection of the UV light in atmosphere need a continuous monitoring of the aerosol stratification to obtain a reliable evaluation of the properties of the primary particles. The ARCADE project is measuring the aerosol attenuation of UV light due to aerosols with multiple techniques and instruments simultaneously on the same air mass. For this purpose, a Raman + elastic Lidar with a laser source at 355 nm has been built and is currently taking data in Lamar, Colorado together with the Atmospheric Monitoring Telescope (AMT) to detect UV light at a distance of 40 km from the Lidar laser source. The system has been installed on site in 2014 and data were taken every month during moonless nights for one year. A full simulation of the AMT system has been developed. The setup and simulation of the system, together with the AMT calibration system and first collected data are shown.

The 34th International Cosmic Ray Conference,
30 July- 6 August, 2015
The Hague, The Netherlands

*Speaker.

1. Introduction

The ARCADE project is a 3-years project funded by MIUR (Italian Ministry for Research) on the FIRB 2010 call that involves groups of the University of Naples and of the University of Torino, in close collaboration with the Colorado School of Mines of Golden, Colorado and the CETEMPS - University of l'Aquila, with the support of INFN - Sezione di Napoli and INFN - Sezione di Torino. The target of the ARCADE project is the comparison of multiple techniques and instruments measuring atmospheric aerosol attenuation profiles of UV light as those commonly used in cosmic rays experiments. In this field, instruments based on a well known laser source and able to collect the back-scattered (Lidars) and/or the side-scattered (UV telescopes) light are used to produce aerosol attenuation profiles, but the high interference with data taking makes it difficult to properly compare the results obtained with the various instruments operating within an operating experiment. ARCADE is a stand-alone experiment composed by a Raman + elastic lidar and by a UV telescope (the Atmospheric Monitoring Telescope - AMT) located at 40 km from the lidar laser source to investigate the typical back-scattering and side-scattering techniques used in the cosmic rays community. The Raman lidar has been designed and realized within this project. The AMT, owned by the Colorado School of Mines, has been partially renewed and reassembled after a period of inactivity to be used for this project. The location chosen for the data taking is Lamar, Colorado, a flat plateau at 1100 m a.s.l., the typical environment to host cosmic rays observatories.

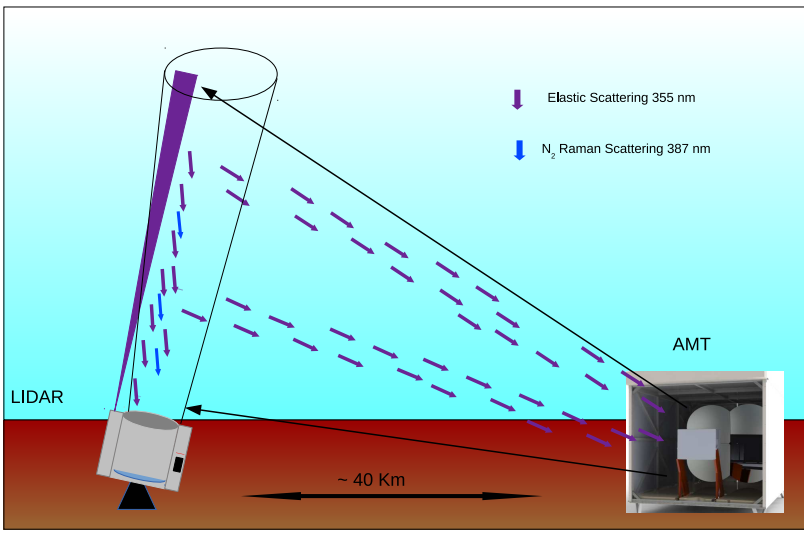

Figure 1: Sketch of the ARCADE system : the Raman lidar is $\sim$ 40 km far from the AMT. The laser source of the lidar fires a beam into the sky and both devices collect the light scattered by the atmosphere towards them.

The timetable of the project was divided in three phases: the first year was spent for the design, simulation and construction of the lidar, for testing the AMT in the laboratory of the Colorado School of Mines in Golden, and for the development of the software nedeed to run and remotely control the system. During the second year the construction of the lidar was completed and it was

tested first in Turin and then in L'Aquila, in parallel with a lidar of the EARLINET network in CETEMPS/DSFC, while the simulation of the AMT telescope, needed for the data analysis, was developed. In the third year of the project the lidar has been installed in Lamar, Colorado, the AMT has been reassembled and put in operation. Data taking started in July 2014 and lasted one year. Three calibration campaign of the AMT telescope with a nearby laser system have been performed during this last year. In July 2015 the lidar has been unmounted and shipped back to Italy to be upgraded before becoming part of the Cherenkov Telescope Array (CTA) experiment, as presented elsewhere in these proceedings [1].

2. The Raman Lidar

The lidar used in ARCADE has been fully designed and realized within the project in collaboration with the technicians of the INFN Mechanical Workshop of Torino with the support of the INFN Mechanical Workshop of Napoli. The mechanical structure of the lidar is compact (1.5 m $\times$ 0.8 m $\times$ 0.8 m) and consists of three boxes made of anodized aluminum that host the laser bench, the primary and secondary mirrors, and the wavelenght separator system respectively.

The laser source of the lidar is a Quantel Centurion Nd:YAG diode-pumped solid state laser [2] with a second and third harmonic generation module that emits UV light at $\lambda = 354.7nm$, with residual at 1064 nm and 532 nm, having a variable repetition rate from 1 to 100 Hz, and a maximum energy of 6 mJ. The laser bench, schematic and realization, is shown in details in figure 2.

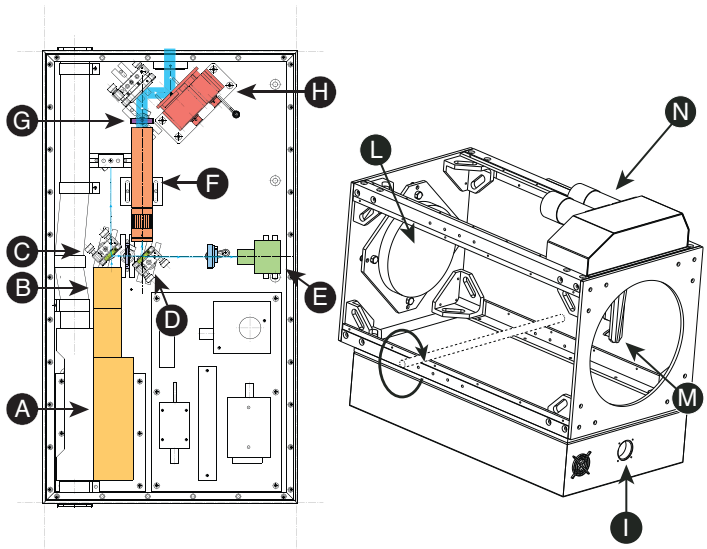

Figure 2: Left : the laser bench. Right : the lidar telescope. The laser (A) emits a ϕ 1.6 mm light beam with a full divergence of $\sim$ 3 mrad. Light is purified by five dichroic mirrors (B,C). A beam splitter (D) sends 5% of the light to a laser probe (E). The main beam passes though a 10X beam expander (F), thus reducing the divergence to $\sim$ 0.3 mrad. The light is depolarized (G). The beam alignment can be finely controlled with a motorized mirror mount (H). The beam exits the laser box passing through a quartz window (I). The primary mirror (L), the secondary mirror (M) and the Raman + elastic receiver (N).

The light receiver is a 25 cm, f/3, Newtonian telescope: it consists in a parabolic primary mirror that reflects the collected backscattered light to a 45 degrees inclined flat mirror placed

along its axis just before the focus point. The light passes through an iris and are then parallelized by a movable plano-convex lens and sent to the Raman block : a mirror reflects the incoming light towards a beam-splitter which separates the N_2 Raman backscattered light (λ =386.7 nm) from the elastic component. The two light beams pass through a 2 nm-wide narrow band filters with trasmission wavelength centered at 354.7 nm and 386.7 nm respectively and are collected by two different 2" Hamamatsu R1332 PMTs that convert light to electrical signals; signals from PMTs are amplified by a factor 20 and sampled with a 10 bit 1 GS/s CAEN DT5751 digitizer [10].

A simulation of the Lidar system based on Geant 4 has been developed to check the feasibility of the designed system. The path of the incoming light from the primary mirror towards the PMT is shown in figures 3.

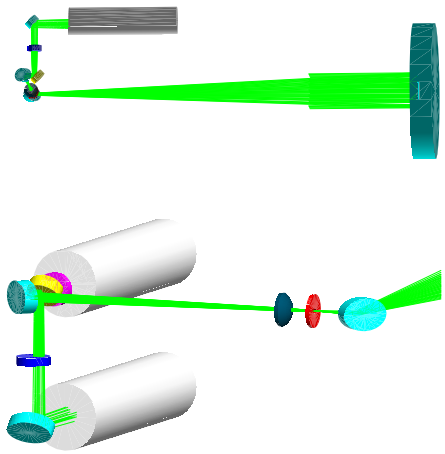

Figure 3: Geant4 simulation of the ARCADE lidar receiver and photon raytracing. Top: a parallel beam of light hit the primary mirror and photons are ray-traced toward the PMT. Bottom: detail of the light collecting system. The secondary mirror reflects the light in an adjustable system composed by an iris (in red) and a plano-convex lens (in grey) towards the Raman receiver. A mirror reflects the light toward a beam-splitter mirror (in yellow) that reflects the 354.4 nm and transmit the 386.7 nm wavelengths that are filtered before hitting the PMTs.

The system is fixed on a zenithal steerable mount that can rotate the lidar from 0° to 90° and is hosted within an astronomical dome placed on top of a 20 feet shipping container.

3. The AMT

The Atmospheric Monitoring Telescope (AMT) is a telescope for the detection of UV light owned by the Colorado School of Mines. The telescope was built during 2008 with spares recovered from the HiRes experiment for the R&D of the Auger North experiment and was used for atmospheric research in 2010-2011. The AMT is currenly positioned at about 40 km from the laser source of the lidar and is composed by a 4-segment spherical mirror having a total area of 3.5 m^2 and by a camera equipped with three columns of sixteen photomultipliers Photonis XP3062 with hexagonal window and a field of view of 1° (see figure 4). A UV filter is positioned in front of

the camera : the transmission has a maximum of $\sim$ 80% at around 360 nm, and falls to less than 20% for wavelenghts above 420 nm. An isotropic LED source is installed in the center of the four segments of the mirror. The LED facility emits uniform and stable UV light across the camera and it is used to perform a day by day relative calibration of the PMTs and electronics response to a fixed amount of light. The stability of the LED is monitored using of a photodiode.

Figure 4: Left: AMT camera equipped with 3 columns of XP3062 photomultipliers. Right : the 4-segment spherical mirror and the camera housed within the waterproof shelter. The office container next to the telescope hosts all the computers.

The AMT telescope is housed in a dedicated waterproof container with authomatic and remotely controlled doors, as shown in figure 4. The container is inclined to obtain an angle of elevation of the telescope of 8.72° from the horizontal. With this setup the light of the laser of the lidar enters the field of view of the camera at about 1.5 km above ground level and is visible up to $\sim$ 10.8 km. Within the ARCADE project, the camera of the AMT has been moved to the laboratory of the Colorado School of Mines in Golden, Colorado, at the end of 2012 to verify and upgrade it after the long period of inactivity. During this period, the Data Acquisition System has been improved and a new LED facility has been installed [4].

4. AMT Simulation

The AMT data analysis is performed using a custom version of the "Laser Simulation Analysis" technique developed for the analysis of the Central Laser Facility data of the Pierre Auger Observatory by the Naples Auger Group and described in [5]. The method is based on the comparison between data and simulations of the light altitude profiles collected at the aperture of the telescope. Simulations are generated in different aerosol attenuation conditions and compared to data to find the best compatibility. The simulation process adopted to generate laser light profiles as detected from the AMT is partially based on the Auger $\overline{\text{Off}}\underline{\text{line}}$ Framework [6], integrated with a Geant 4 simulation developed within this project to describe the AMT detector and the ray-tracing of the photons through it. The detector is constructed defining a number of "volumes", each one created describing shape and physical characteristics, and positioned inside a containing mother volume. To create the exact structure of each element, each volume is shaped using the elementary solids that are implemeted in Geant4 as primitive classes. The code for the detailed description of each part of the telescope in dedicated classes (Mirror, Camera, PMT, Filter) has been developed.

Mirror: the mirror is composed by four identical portions of a spherical cap (petals). The curvature centre of each mirror segment is coincident with the curvature center of the composed mirror. Each element corresponds to the subtraction of a parallelepiped-shaped box from a hollow sphere; the resulting solid is then intersected with two other boxes. The single mirror segment is then duplicated, and the copies are properly rotated to assemble the full mirror.

Camera/PMTs: the PMT windows are implemented as lime-glass hexagons, containing the metallic photocathodes. 48 PMT windows and photocathodes ae positioned on the plane surface of the camera: then the camera is positioned in the mirror focus, and the precise arrangement of the PMTs on the camera results from direct measurement of the position and distances taken on the real AMT camera. The vertical supports of the camera are also simulated.

Filter: the filter is implemented as a glass that transmits the 80% of the light.

Simulated photons from the laser beam scattered towards the telescope and attenuated in the traversed path are tracked through the Geant4 telescope simulation and the number of photo-electrons generated at photocathode of each PMT for each time bin is generated.

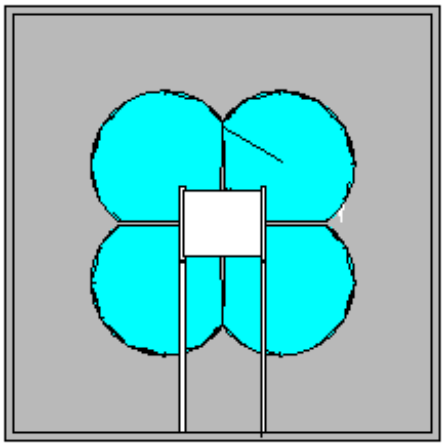

Figure 5: The AMT telescope from the Geant4 simulation.

5. AMT calibration

The response of the AMT can change in time, as an example due to changes in the PMTs gain or accumulation of dust on the mirror. To take into account any possible variation, relative and absolute calibrations of the AMT are regularly performed.

The relative calibration is daily performed using the UV LED source mounted in front of the camera. Several layers of diffuser material are used to make the light almost isotropic when it reaches the camera. The LED source, provided by the Colorado State University, has been calibrated in lab and its stability over time has been tested. The calibration procedure is runned firing the LED 240 times at a frequency of 4 Hz, immediately before and after the daily AMT data taking, providing a set of calibration data for each set of laser shots. The calibration constant (K_i^{FF}) is calculated for each AMT pixel by dividing the averaged signal of each PMT (S_i) for the averaged signal of a reference PMT (S_0) to apply a flat fielding correction to the camera :

$$K_i^{FF}(t) = \frac{S_i(t)}{S_0(t)} \tag{5.1}$$

To take into account any possible change over time of the response of the PMTs, the calibration factor of each pixel is normalized to the ratio between the value of the averaged signal of the reference PMT measured in that calibration set with the average signal recorded by the same PMT in a reference night $(S_0(t_0))$:

$$K_i(t) = \frac{K_i^{FF}(t)}{S_0(t)/S_0(t_0)} \tag{5.2}$$

Absolute calibration campaignes of the AMT were done every few months using a closeby calibrated laser source at 354.7 nm hosted in an optical bench including a depolarized, a 5X beam expander and two probes to measure the energy of a percentage of the laser beam for each shot. The laser bench is shown in figure 6. An abolute energy probe is positioned outside the laser box to measure the real energy sent to the sky. This last probe is hosted on a mechanical structure specifically built to easily insert and remove the probe during the measurements and to verify the alignment of the laser beam with the vertical axis.

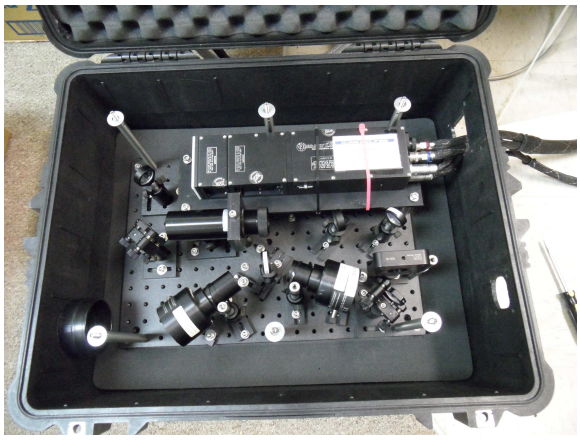

Figure 6: The laser bench of the system used for the absolute calibration of the AMT.

Three calibration campaignes have been performed : October 2014, January 2015 and July 2015. The laser source is driven out into the field at approximately 3 km from the AMT and fires vertical shots at different energies as low as 10-15 μJ to avoid saturation of the PMTs. The aerosol attenuation can be neglected due to the closeby position and since Rayleigh scattering from the molecular component of the atmosphere is known, the flux of photons arriving at the telescopes can be predicted very accurately once the energy of each shot is known. The AMT data acquired using the calibration laser are therefore used to fix the energy scale between simulated and measured laser events: Rayleigh scattering is well implemented in the simulation code, and hourly GDAS data are used to extract the concentration of molecules in the atmosphere.

The reconstructed signal of a measured and a simulated calibration laser event are shown in Fig.7: the simulation reproduces closely the measured signal. In the simulation the energy of the laser is set to the value recorded by the probe to fix the scale between simulated and measured

events. The ratio between the integral of the area under the measured profile and the simulated profile is used as normalization factor to be applied during AMT data analysis.

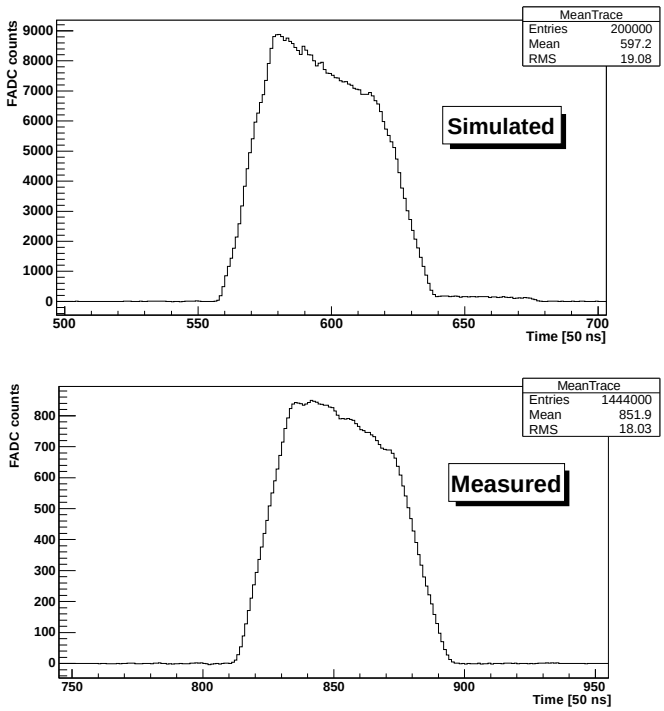

Figure 7: Comparison of a simulated (top) and a measured (bottom) calibration laser profile. The different value of ADC counts forces the use of an absolute calibration factor.

References

[1] L. Valore et al., Procs. ICRC 2015

[2] http://www.quantel-laser.com/products/item/centurion-40-mj–135.html

[3] http://www.laserprobeinc.com/Rjp445.pdf

[4] L. Valore et al., “ARCADE Atmospheric Research for Climate and Astroparticle DEtection : description of the project and setup of the LIDAR/AMT system”, proceedings AtmoHEAD 2014

[5] The Pierre Auger Collaboration, *JINST* **8** 04009 (2013)

[6] S. Argiro, et al. for the Pierre Auger Collaboration, *Nucl. Instr. and Meth.* **A 580** 1485 (2007)

[7] L. Valore et al., “The ARCADE project”, these proceedings

[8] L. Valore for the Pierre Auger Collaboration, “The aerosol monitoring system of Auger”, Procs. ICRC 2009

[9] S.Y. BenZvi et al., “The Lidar system of the Pierre Auger Observatory”, NIM A574:171-185 (2007)

[10] http://www.caen.it/csite/CaenProd.jsp?parent=14&idmod=632