Linear Collider R&D Status in cooperation with CERN and KEK focusing on the ILC

Akira Yamamoto (KEK-CERN)

CERN-KEK Committee held at KEK,
21 November, 2014

ILC “Design to Realization”

1980’ ~ Basic Study

2005 2006 2007 2008 2009 2010 2011 2012 2013 2014

2004

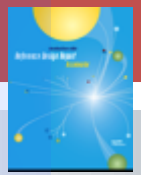

ILC-GDE

LCC

Ref. Design (RDR)

Tech. Design : TDP1

TDP 2

TDR completion

LHC

Selection of SC Technology

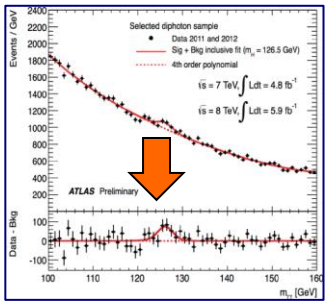

126 GeV

Higgs discovered

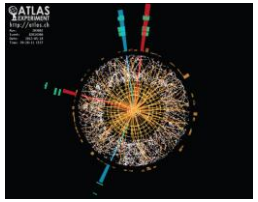

ILC TDR Layout

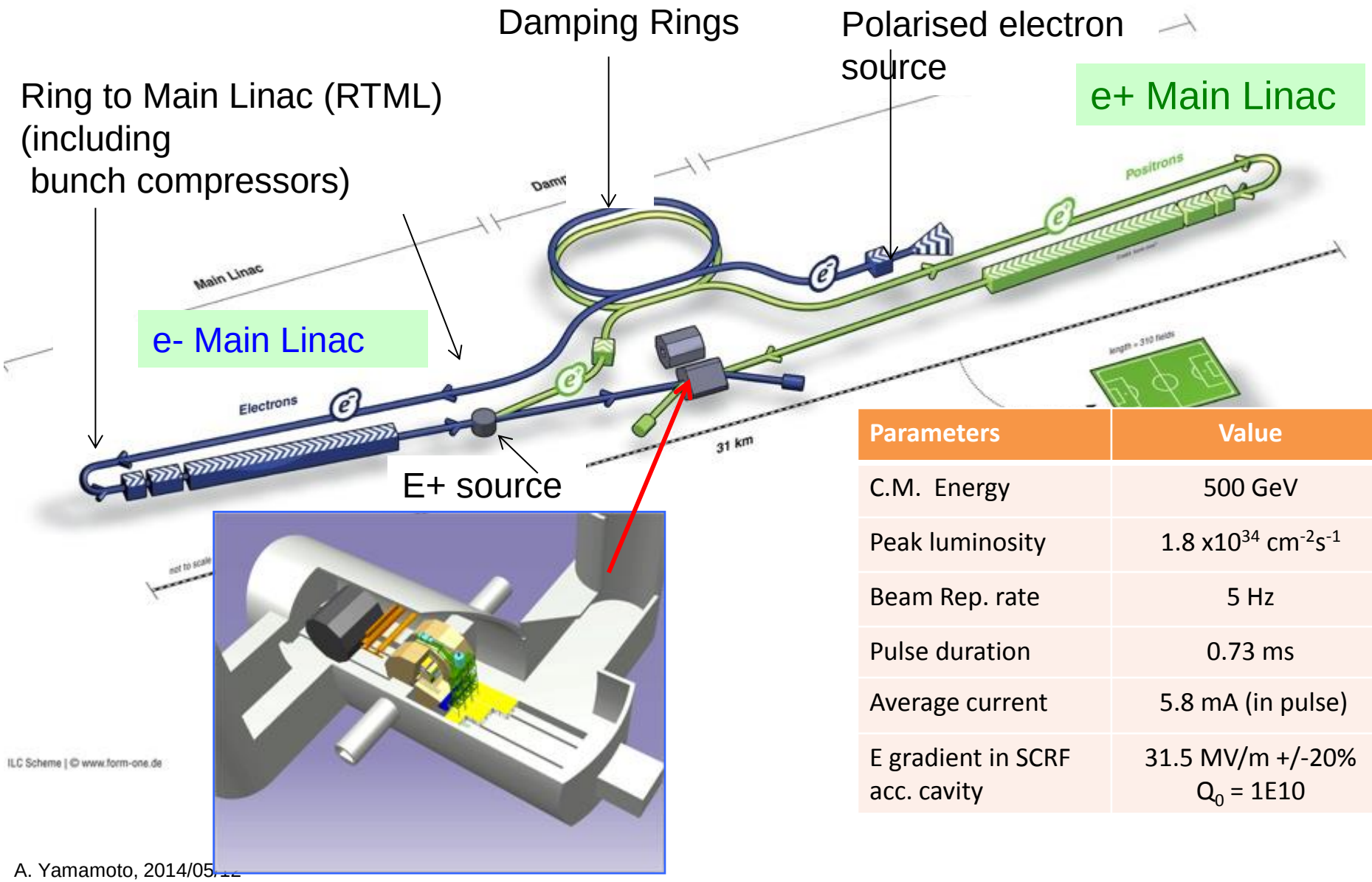

Parameters	Value
C.M. Energy	500 GeV
Peak luminosity	1.8 x10^{34} $cm^{-2}s^{-1}$
Beam Rep. rate	5 Hz
Pulse duration	0.73 ms
Average current	5.8 mA (in pulse)
E gradient in SCRF acc. cavity	31.5 MV/m +/-20% Q_0 = 1E10

ILC Time Line: Progress and Prospect

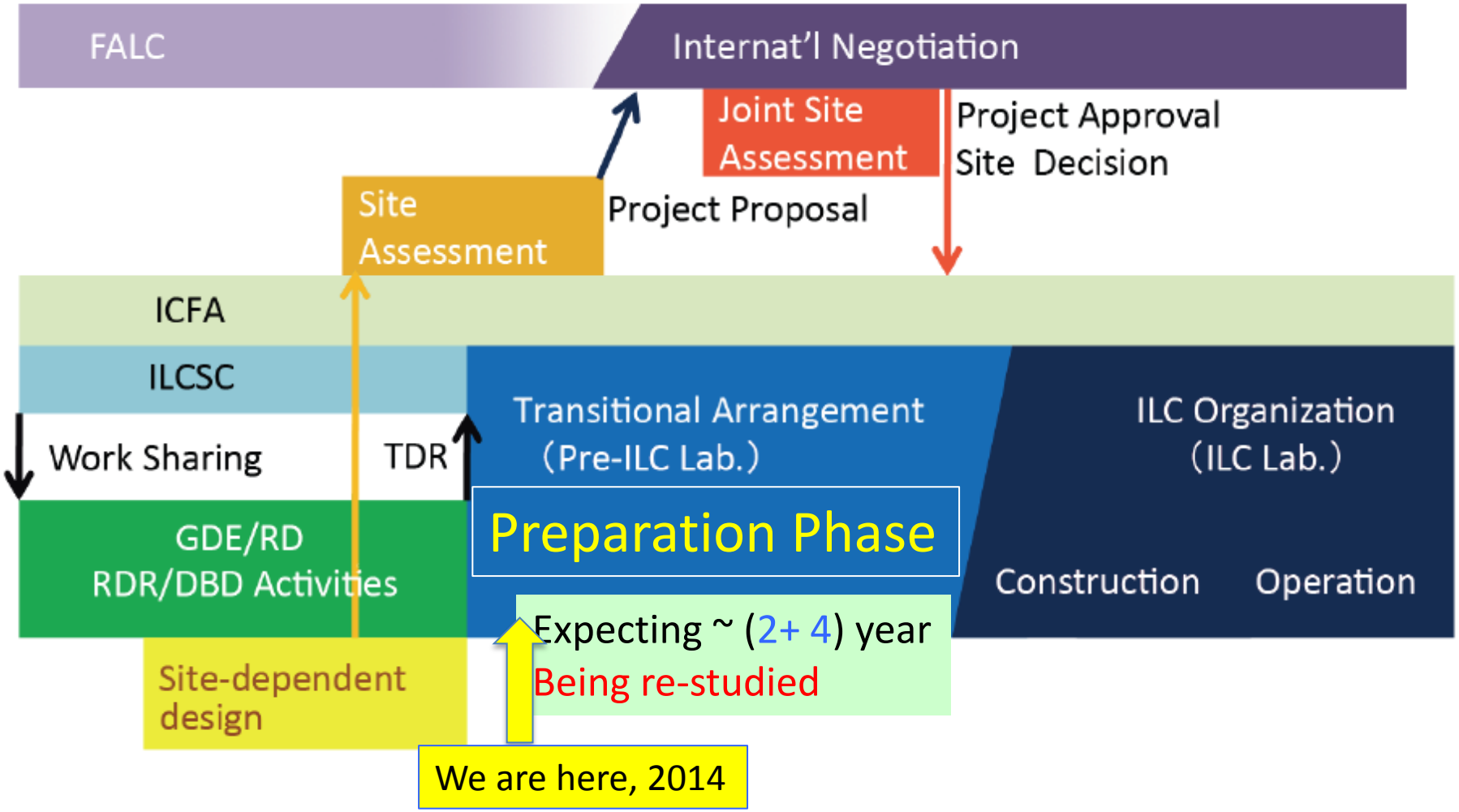

ILC Accelerator Concept

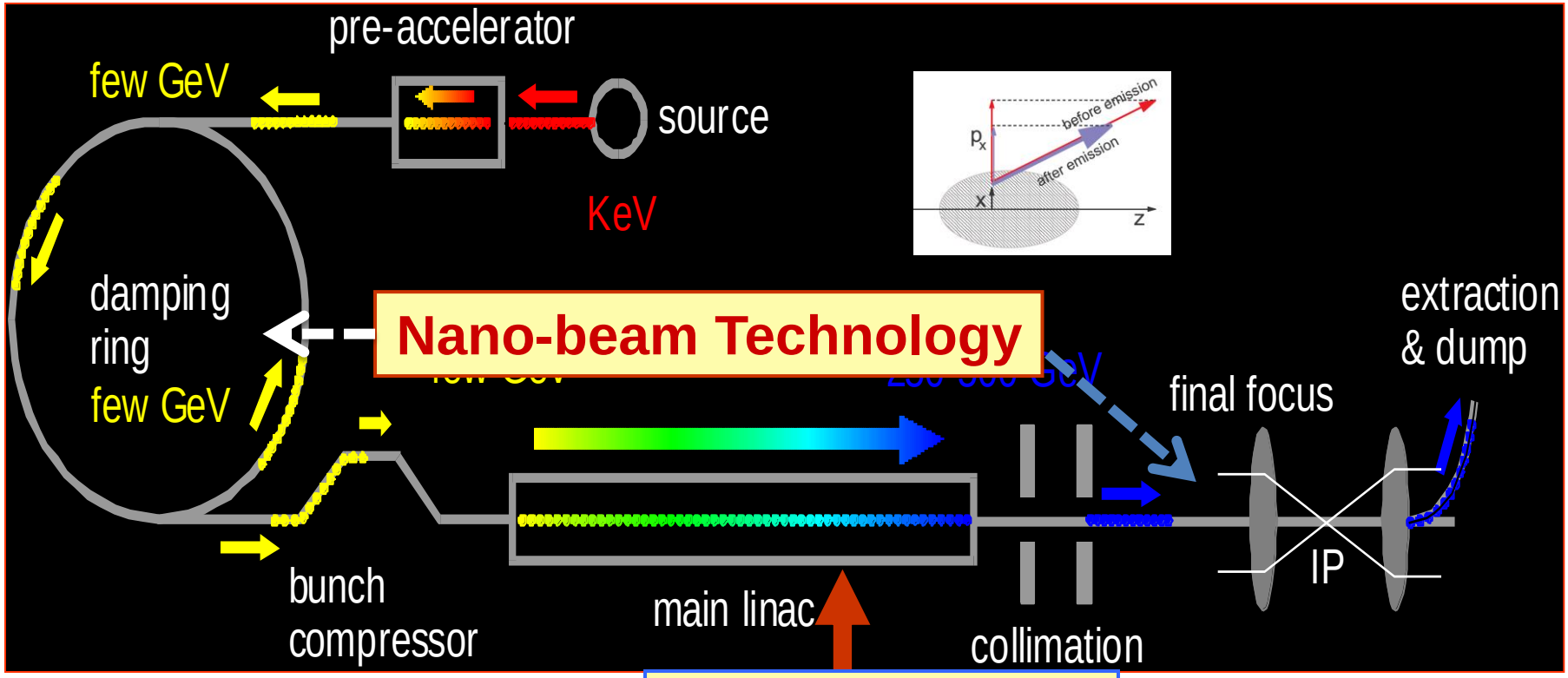

SRF Technology

- Electron and Positron Sources (e-, e+) :
- Damping Ring (DR):
- Ring to ML beam transport (RTML) :
- Main Linac (ML) : SCRF Technology
- Beam Delivery System (BDS)

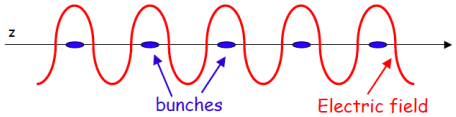

Remaining Works in Preparation Phase

Key Examples

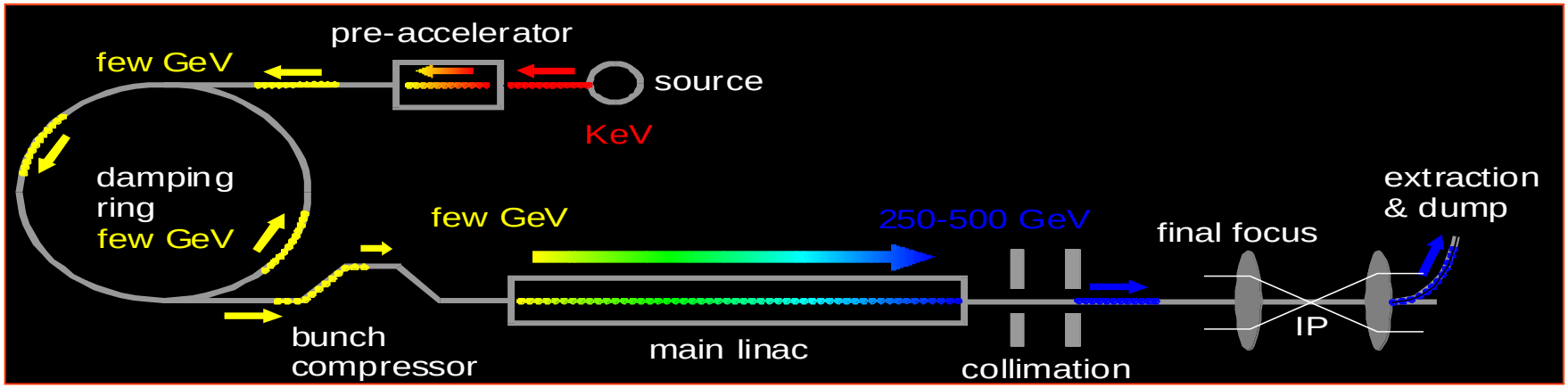

- Accelerator Design and Integration with EDMS:
- CFS: Site specific work including Central Campus design and others,
- Positron Source: vacuum sealing technology for rotating target,
- Damping Ring: Ultra low emittance, Undulators, 650 MHz SCRF,
- RTML: residual magnetic field effect in long beam transport-line,
- ML: Cavity, CM, Cryogenics integration, to be best cost-effective,
- BDS: Final focusing w/ nano-beam, and beam optics update

ILC in Linear Collider Collaboration

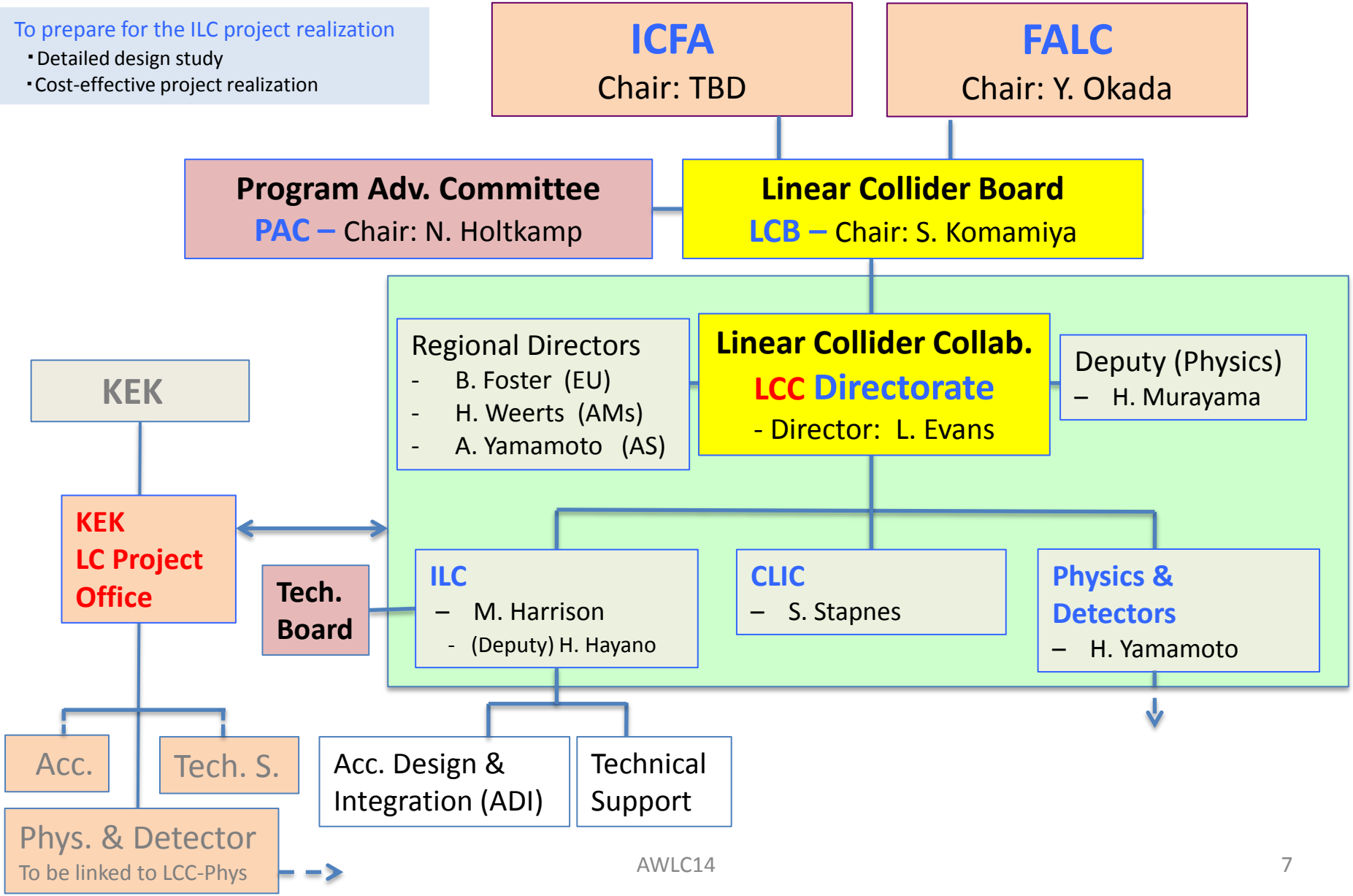

LCC-ILC Accelerator Organization

LCC-ILC Director: M. Harrison, Deputies: N. Walker and H. Hayano *KEK LC Project Office Head: A. Yamamoto

Sub-Group	Global Leader Deputy/Contact p.	KEK-Leader* Deputy	Sub-Group	Global Leader Deputy/Contact P.	KEK-Leader* Deputy
Acc. Design Integr.	**N. Walker (DESY)** K. Yokoya(KEK)	K. Yokoya	**SRF**	**H. Hayano (KEK)** C. Ginsburg (Fermi), E. Montesinos (CERN)	H. Hayano Y. Yamamoto
Sources (e-, e+)	**W. Gai (ANL)** M. Kuriki (Hiroshima U.)	J. Urakawa T. Omori	**RF Power & Cntl**	**S. Michizono (KEK)** TBD (AMs , EU)	Michizono T. Matsumoto
Damping Ring	**D. Rubin (Cornell)** N. Terunuma(KEK)	N. Terunuma	**Cryogenics** (incl. HP gas issues)	**H. Nakai: KEK** T. Peterson (Fermi), D. Delikaris (CERN)	H. Nakai Cryog. Center
RTML	**S. Kuroda (KEK)** A. Latina (CERN)	S. Kuroda	**CFS**	**V. Kuchler (Fnal)** A. Enomoto (KEK), J. Osborne (CERN),	M. Miyahara T. Sanuki
Main Linac (incl. B. Compr. & B. Dynamics)	**N. Solyak (Fermi)** K. Kubo (KEK)	K. Kubo	**Radiation Safety**	**T. Sanami (KEK)** S. Roasler (CERN, tbc) TBD (AMs,)	T. Sanami T. Sanuki
BDS	**G. White (SLAC),** R. Tomas (CERN) T. Okugi(KEK)	T. Okugi	**Electrical Support** (Power Supply etc.)	TBD	TBD
MDI	**K. Buesser (DESY)** T. Tauchi (KEK)	T. Tauchi	**Mechanical S.** (Vac. & others)	TBD	TBD
			Domestic Program, Hub Lab. Facilities	TBD	H. Hayano T. Saeki

LCC-ILC Accelerator Organization

LCC-ILC Director: M. Harrison, Deputies: N. Walker and H. Hayano *KEK LC Project Office Head: A. Yamamoto

Sub-Group	Global Leader Deputy/Contact p.	KEK-Leader* Deputy	Sub-Group	Global Leader Deputy/Contact P.	KEK-Leader* Deputy
Acc. De Integr.			SRF	**H. Hayano (KEK)** C. Ginsburg (Fermi), E. Montesinos (CERN)	H. Hayano Y. Yamamoto
Source (e-, e+)			RF Power & Cntl	**S. Michizono (KEK)** TBD (AMs , EU)	Michizono T. Matsumoto
Dampi Ring			Cryogenics (incl. HP gas issues)	**H. Nakai: KEK** T. Peterson (Fermi), D. Delikaris (CERN)	H. Nakai Cryog. Center
RTML			CFS	**V. Kuchler (Fnal)** A. Enomoto (KEK), J. Osborne (CERN),	M. Miyahara T. Sanuki
Main L (incl. B. & B. Dyr			Radiation Safety	**T. Sanami (KEK)** S. Roasler (CERN, tbc) TBD (AMs,)	T. Sanami T. Sanuki
BDS			Electrical Support (Power Supply etc.)	TBD	TBD
MDI			Mechanical S. (Vac. & others)	TBD	TBD
			Domestic Program, Hub Lab. Facilities	TBD	H. Hayano T. Saeki

YEARS /ANS CERN

Dr Frédérick Bordry
Director for Accelerators and Technology
DG-DI-DAT

Tel. direct: + 41 22 767 5244
Tel.secretariat: + 41 22 767 4323
Email: Frederick.Bordry@cern.ch

Professor Akira Yamamoto
Professor Michael A. Harrison

Our reference: DG-DI-DAT/Edms1375839

Geneva, 23 April 2014

Dear Colleagues,

Following your request for CERN support during the preparation phase of ILC, we are pleased to announce that the following CERN staff have been identified on our side:

Andrea Latina in the area of Ring To Main Linac
Rogelio Tomas Garcia in the area of Beam Delivery System
Eric Montesinos in the area of tuners and couplers
Dimitri Delikaris in the area of Cryogenics
John Osborne in the area of Civil Engineering / Conventional Facilities and Siting

The typical estimated load is 10% or below, and we consider that it is realistic to mention these persons in the preparation team as contact persons for specific technical areas. Increased effort from these people, or additional involvement in terms of fellows and supporting staff, would need to be agreed and discussed case by case.

Steinar Stapnes should be used as contact point ensuring that the appropriate line structure at CERN has been involved in each case.

Yours sincerely,

Frédérick Bordry
Director for Accelerators and Technology

c.c. R. Heuer, S. Bertolucci, ATS Department Heads, Lluis Miralles, D. Delikaris, A. Latina, E. Montesinos, J. Osborne, S. Stapnes, R. Tomas

Authorized by
CERN Acc. Director, F. Bordry

LCC-ILC Accelerator Organization

LCC-ILC Director: M. Harrison, Deputies: N. Walker and H. Hayano *KEK LC Project Office Head: A. Yamamoto

Sub-Group	Global Leader Deputy/Contact p	KEK-Leader* Deputy	Sub-Group	Global Leader Deputy/Contact P	KEK-Leader* Deputy
Acc. D Integr.					ano namoto
Source (e-, e+					ono tsumoto
Dampi Ring					ai g. Center
RTML					vahara uki
Main I (incl. B. & B. Dy					ami uki
BDS					
MD					
					ano T. Saeki

Dear Colleagues,

Following your request for CERN support during the preparation phase of ILC, we are pleased to announce that the following CERN staff have been identified on our side:

Andrea Latina in the area of Ring To Main Linac
Rogelio Tomas Garcia in the area of Beam Delivery System
Eric Montesinos in the area of tuners and couplers
Dimitri Delikaris in the area of Cryogenics
John Osborne in the area of Civil Engineering / Conventional Facilities and Siting

The typical estimated load is 10% or below, and we consider that it is realistic to mention these persons in the preparation team as contact persons for specific technical areas. Increased effort from these people, or additional involvement in terms of fellows and supporting staff, would need to be agreed and discussed case by case.

Steinar Stapnes should be used as contact point ensuring that the appropriate line structure at CERN has been involved in each case.

Yours sincerely,

Frédérick Bordry
Director for Accelerators and Technology

Authorized by
CERN Acc. Director, F. Bordry

Further Global Cooperation to be emphasized

Category	Work-base	Specific subject	Global Collaboration w/
Positron Source		Positron source	PosiPol Collaboration
Nano Beam	ATF	37 nm beam 2 nm stability	ATF collaboration with CERN
SCRF Cavity Integration	STF	Power Input Coupler Tuner He-Vessel	CERN-DESY-KEK CEA-Fermi/SLAC-KEK DESY-KEK (WS at CERN, 5 Sept. 2014)
CM integration	STF, ILC	Conduction-cooled SC Quadrupole	Fermilab-KEK
Cryogenics	ILC	Cryog. Underground He inventry High p. Gas Safety	CERN-Fermilab-KEK (WS at CERN, 18 June, 2014)
CFS	ILC	CFS design prep.	CERN-Fermilab-KEK
Radiation Safety	ILC	ML radiation shield	SLAC-DESY-CERN-KEK

Cooperation with CERN and KEK

- Nano-beam handling technology >> to be reported by R. Tomas
  - Nano-beam and the stability as a common subject for both ILC and CLIC, through ATF collaboration
  - Final focusing including magnet and the mechanical stability, as well as commissioning technology, still to be investigated
- SCRF cavity integration technology,
  - Specially on input-power couplers and tuners, as a common subject for both ILC and SPL for LHC injector upgrade,
- Cryogenic engineering
  - Specially on handling of large amount of helium inventory, as a specially crucial issue in mountain region,
- Civil engineering study
  - specially for the detector-hall design,
- Radiation Safety
  - Radiation safety design and optimization

IPAC2014, K. Kubo
ICHEp2014, S. Kuroda

Progress in Beam Size at ATF2

To be reported by G. Tomas

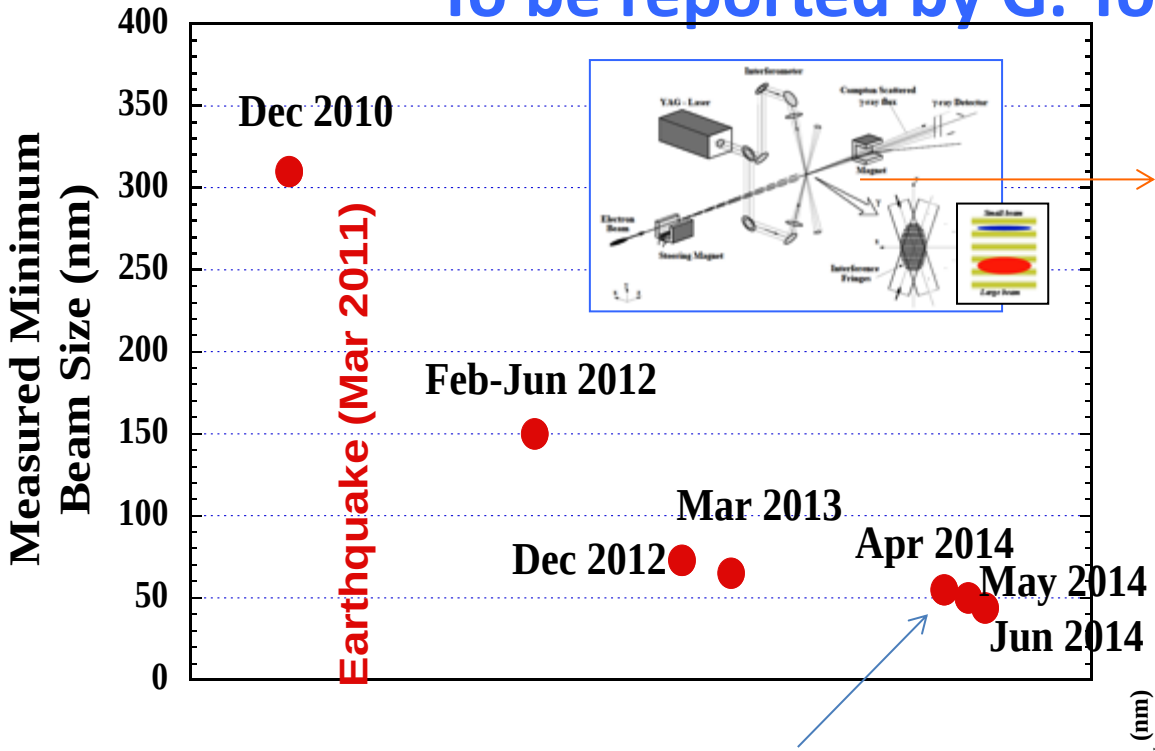

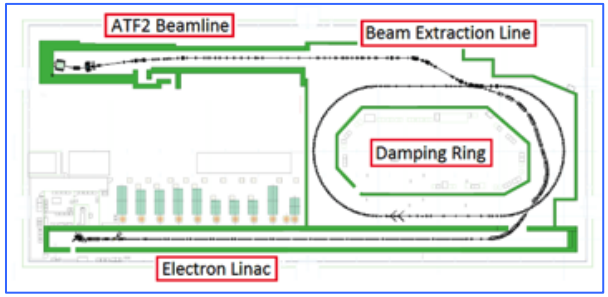

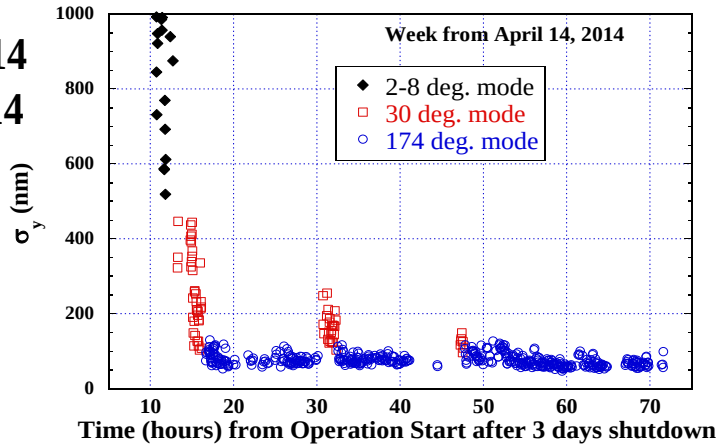

Beam Size 44 nm observed,
(Goal : **37** nm
corresponding to **6** nm at ILC)

Extension of the FY2014 Operation to be realized w/ specially contribution by CERN

- In addition to the operation in October and November, the operation can be extended in December,
  - 10/20-10/31 Beam Operation
  - 11/3-11/7 Maintenance
  - 11/10-11/21 Beam Operation
  - 11/24-11/28 Maintenance
  - 12/1-12/19 Beam Operation Extension

- *Special thanks for the CERN's cooperation!*

Cooperation with CERN and KEK

- Nano-beam handling technology >> to be reported by G. Thomas
  - Nano-beam and the stability as a common subject for both ILC and CLIC, through ATF collaboration
  - Final focusing including magnet and the mechanical stability, as well as commissioning technology, still to be investigated
- SCRF cavity integration technology,
  - Specially on input-power couplers and tuners, as a common subject for both ILC and SPL for LHC injector upgrade,
- Cryogenic engineering
  - Specially on handling of large amount of helium inventory, as a specially crucial issue in mountain region,
- Civil engineering study
  - specially for the detector-hall design,
- Radiation Safety
  - Radiation safety design and optimization

ILC CM Assembly

cavities (8)

SC quad package

Type-B module

Type-A has 9 cavities and no quadrupole

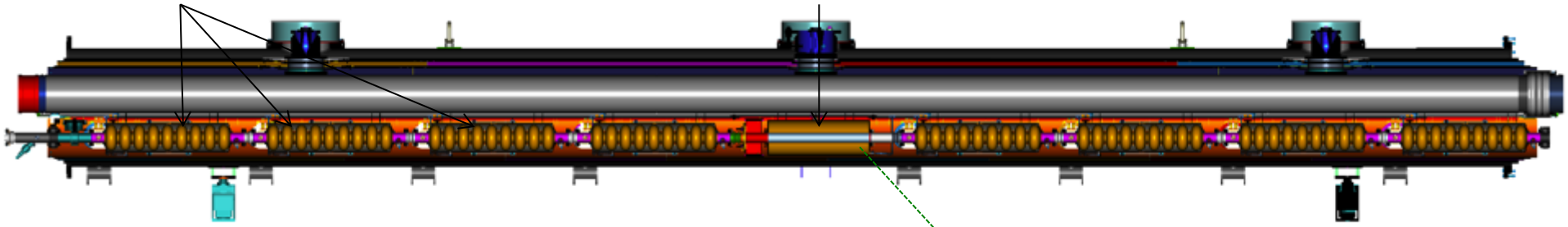

12.652 m (slot length)

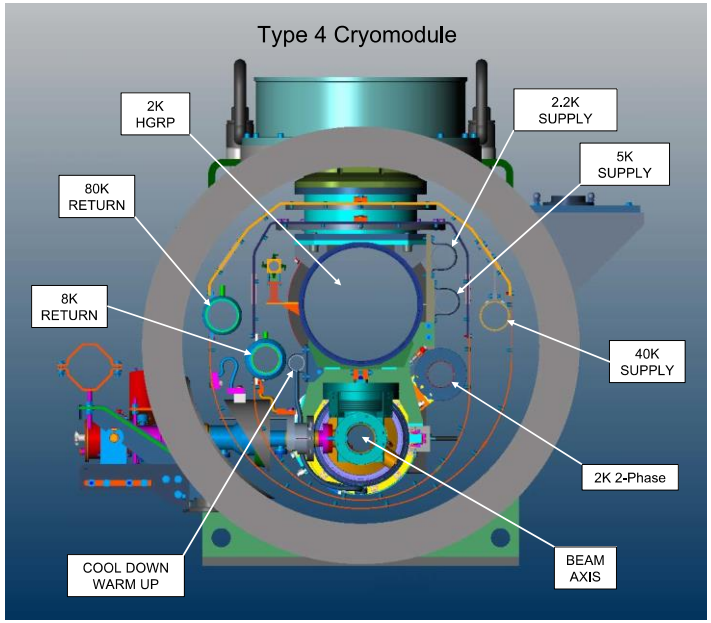

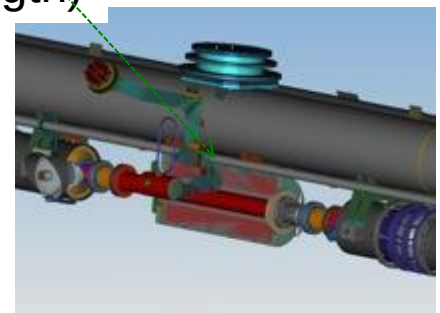

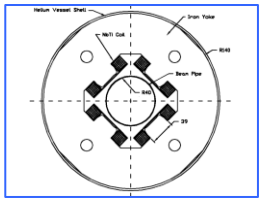

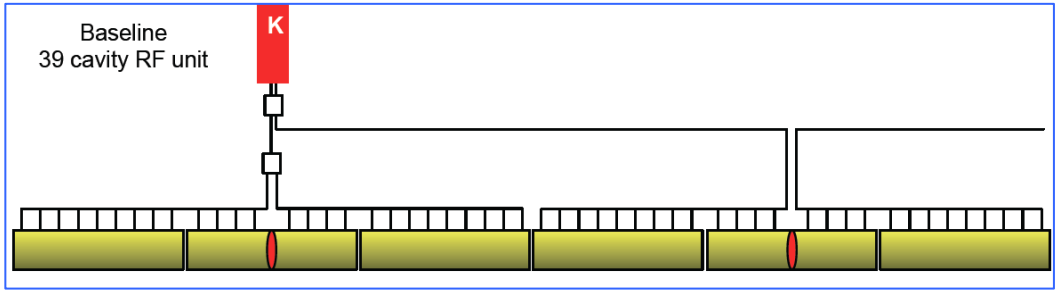

STF2; SCRF ACCELERATOR PLAN AT KEK

■ Objective
- High Gradient (31.5 MV/m)
  ＝＞Demonstration of full cryomodule
- Pulse and CW operation (for effectuve
- Training for next generation s

Plan:
- Multiple CM for system study
- In-house Cavity to be installed in cooperation with industry
- Wide range application including Photon Science

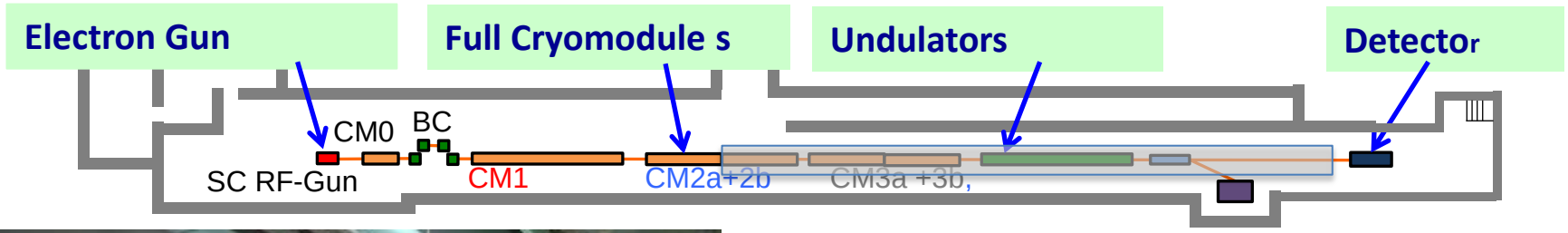

Beam Acceleration to be in 2015

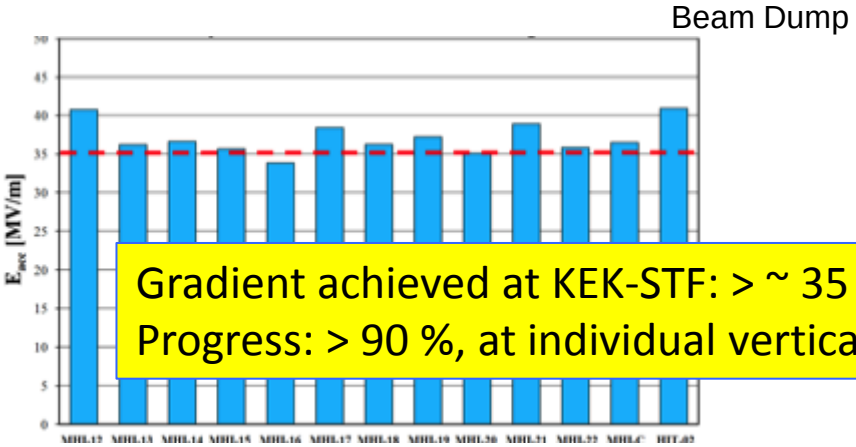

Gradient achieved at KEK-STF: > ~ 35 MV/m
Progress: > 90 %, at individual vertical test

H.Hayano

S1-Global Cavity Packages

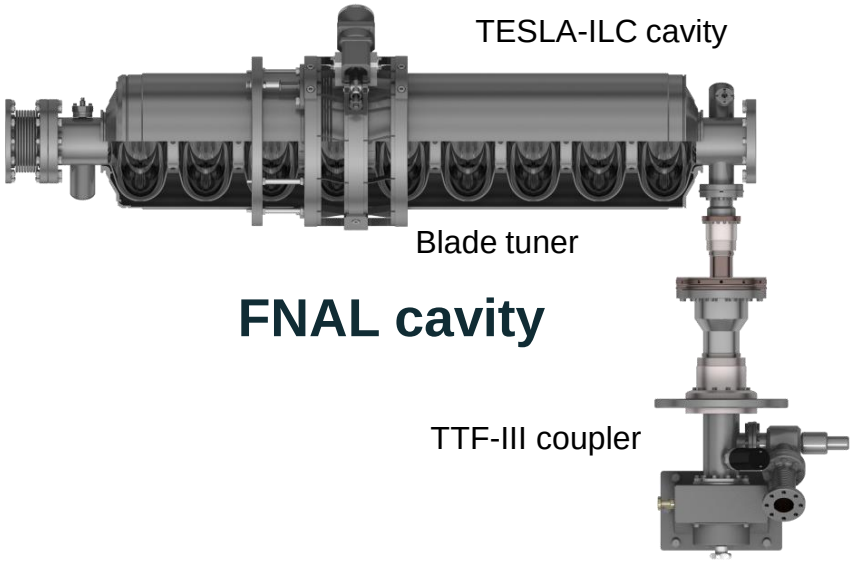

FNAL cavity

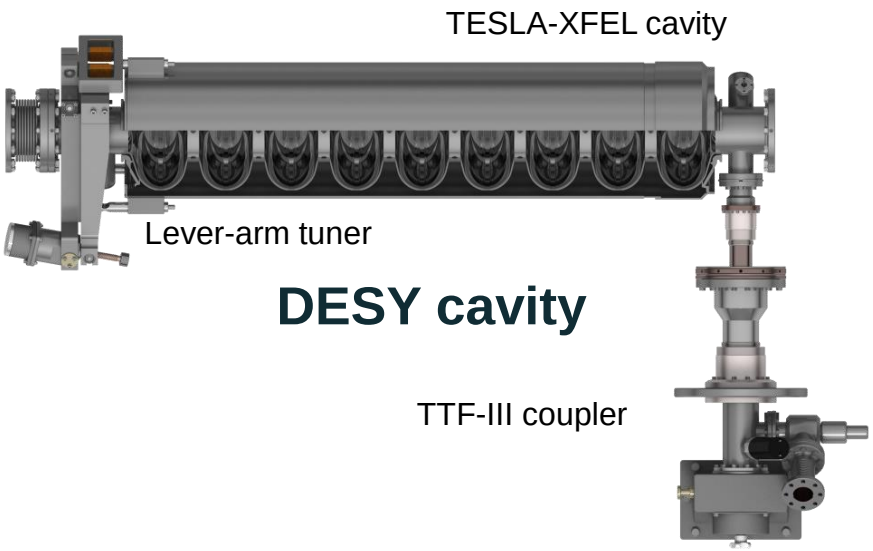

DESY cavity

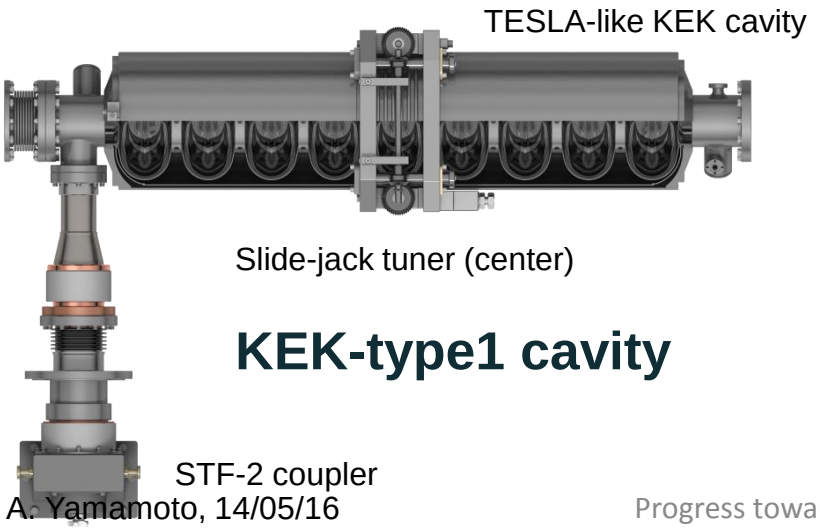

KEK-type1 cavity

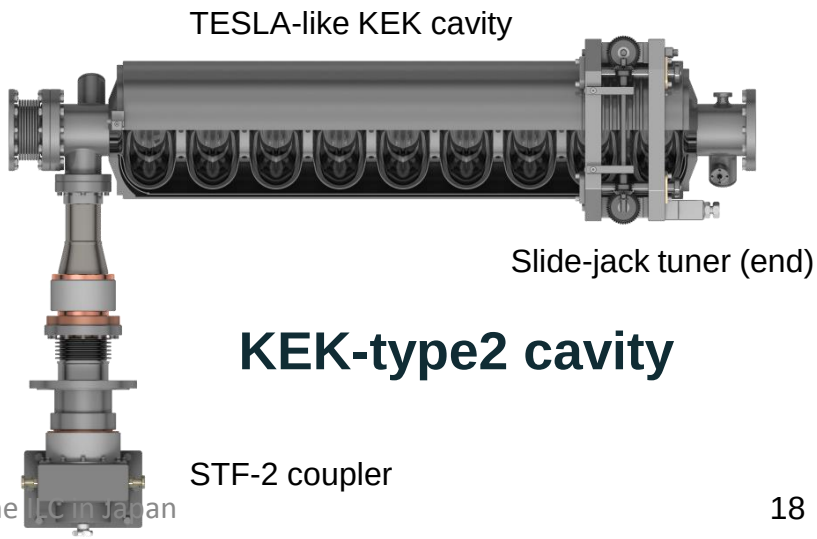

KEK-type2 cavity

Cavities, Tuners, Couplers in S1-G Cryomodule

TESLA Cavity (DESY/FNAL)

Blade Tuner (INFN/FNAL)

Saclay Tuner (DESY)

TTF-III Coupler (DESY/FNAL/SLAC)

Tesla-like Cavity (KEK)

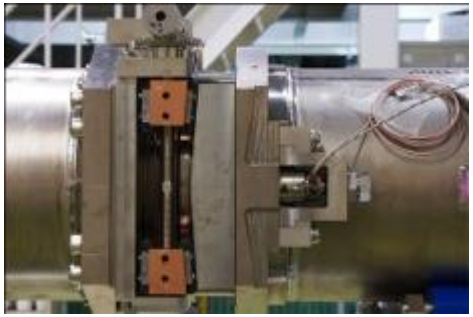

Slide-Jack Tuner (KEK)

STF-II Coupler (KEK)

LCLS-II Cavity: a Tuner Design Option to be investigated

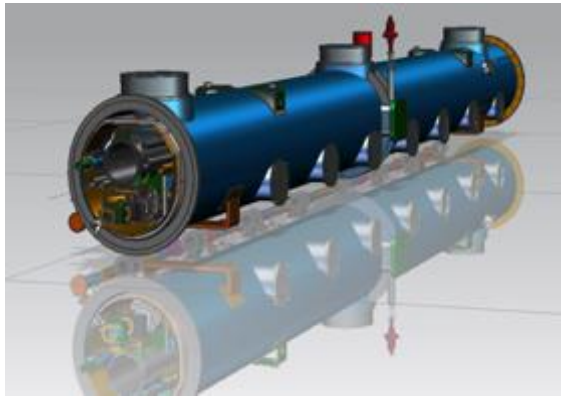

LCLS Tuner design covering the beam Pipe flanges, overcoming a constraint with a shorter beam pipe
T. Peterson, C. Grimm, et al.,

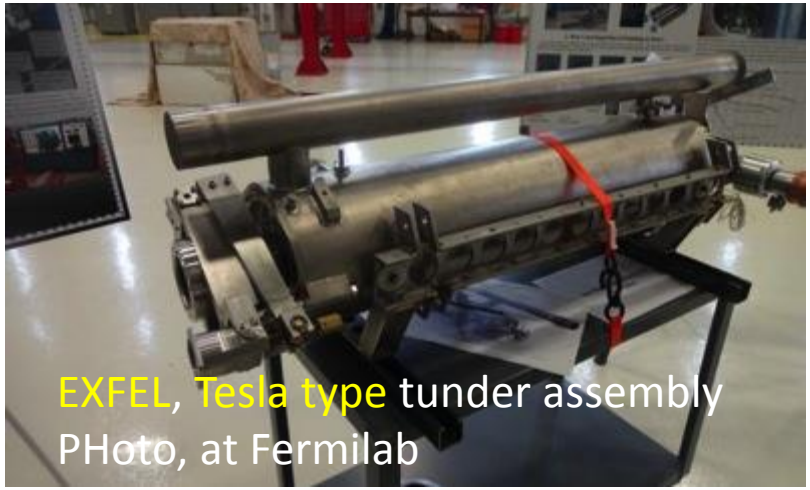

EXFEL, Tesla type tunder assembly PHoto, at Fermilab

Courtesy M. Guinchard

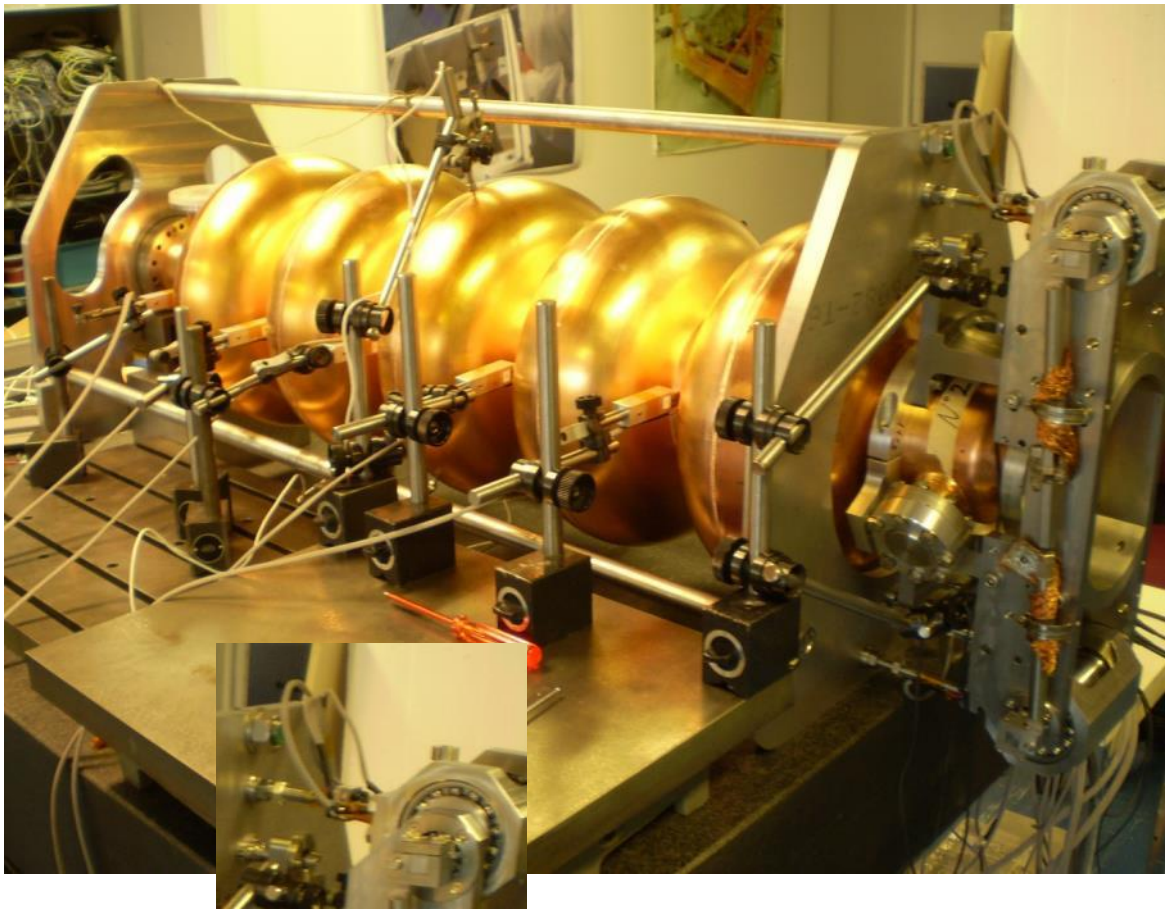

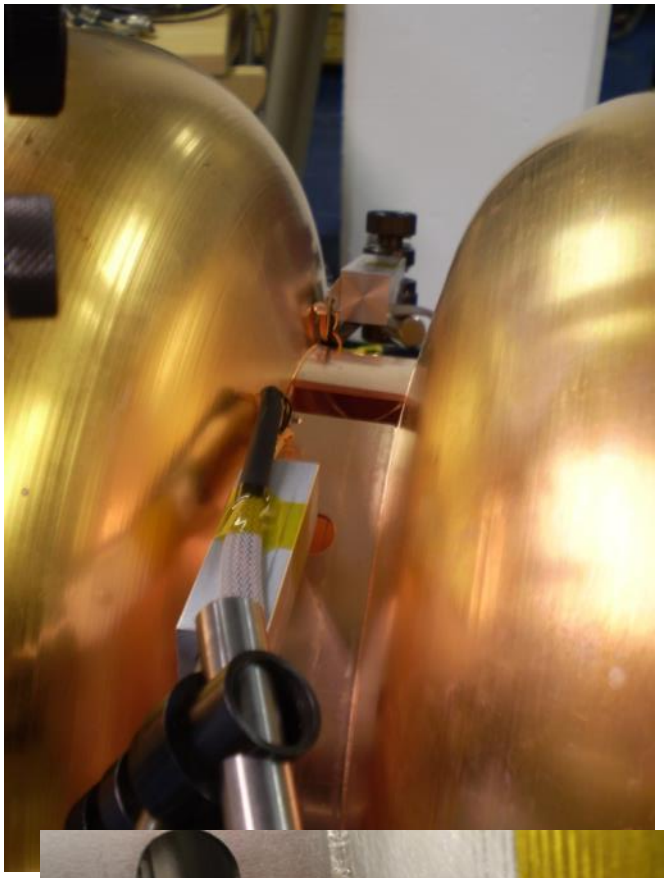

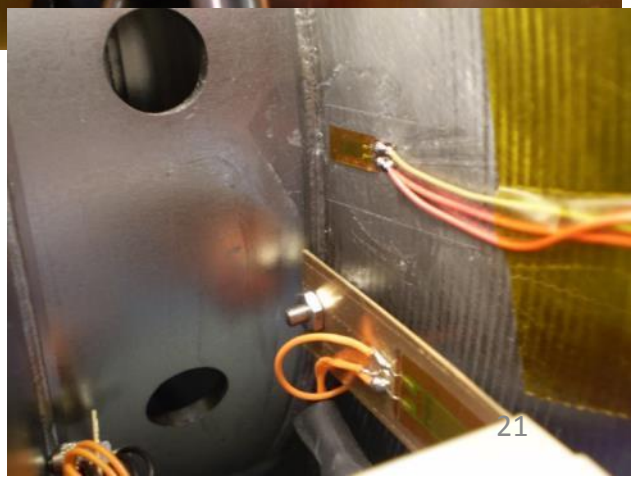

- 5 LVDT's HBM® – WI +/- 2.5mm
- 5 Displacement sensors based on bending stress measurements
- Custom force sensors on rods
- HBM® load cells
- DAQ QuantumX from HBM ® – Fs 50 Hz

SRF Tuner Workshop at CERN, 5 Sept. 2014

H.Hayano

S1-Global Cavity Packages

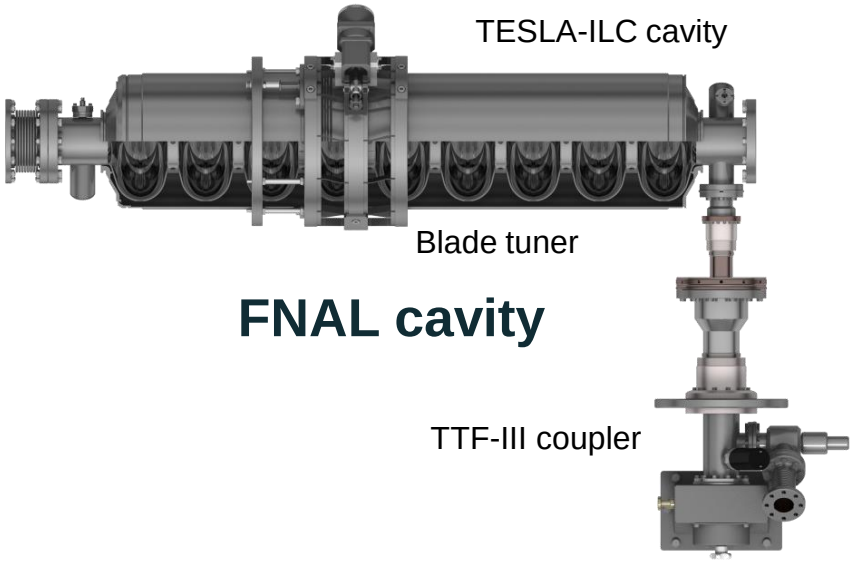

FNAL cavity

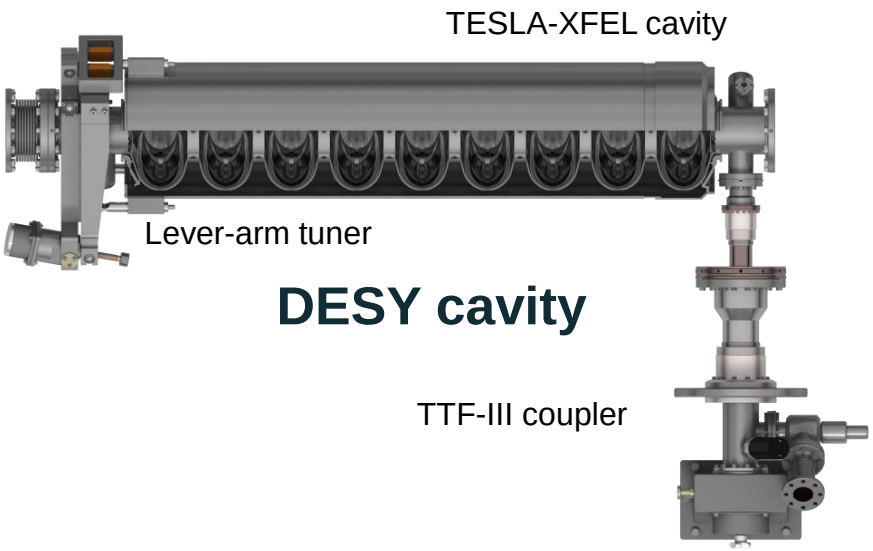

DESY cavity

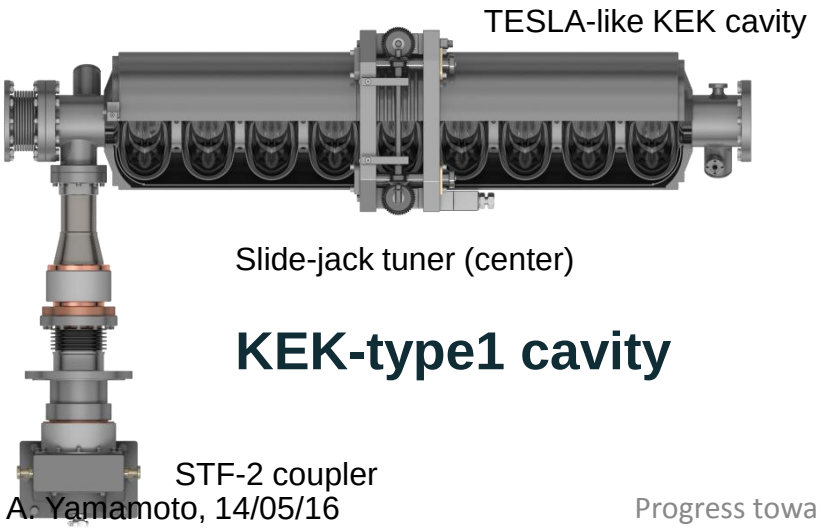

KEK-type1 cavity

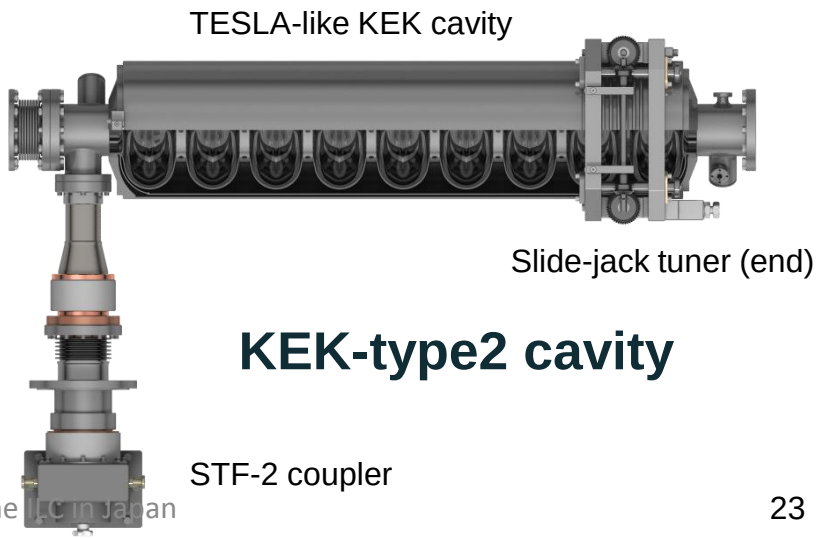

KEK-type2 cavity

Plug-compatible Conditions

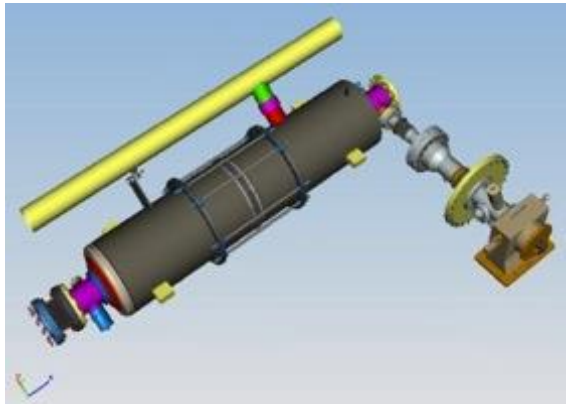

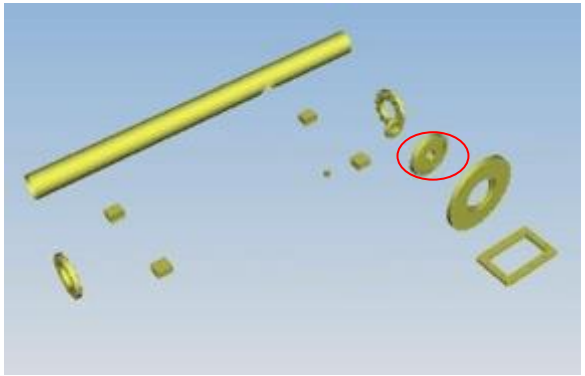

Item	Variation	TDR Baseline
Cavity shape	TESLA / LL	TESLA
Length		Fixed
Beam pipe flange		Fixed
Suspension pitch		Fixed
Tuner	Blade/ Slide-Jack	Blade (→ Lever Tuner as alternate)
Coupler flange (cold end)	40 or 60	40 mm
Coupler pitch		Fixed
He –in-line joint		Fixed
Magnetic shield	Inside/outside	Inside

相対コスト（現状）:

- Coupler: STF > TTF-III coupler (XFEL)
- Tune/He-V: S-Jack >> Blade >> Lever (XFEL)
- Mag. Shield: Inside > Outside (XFEL)

SCRF Power-Input Coupler

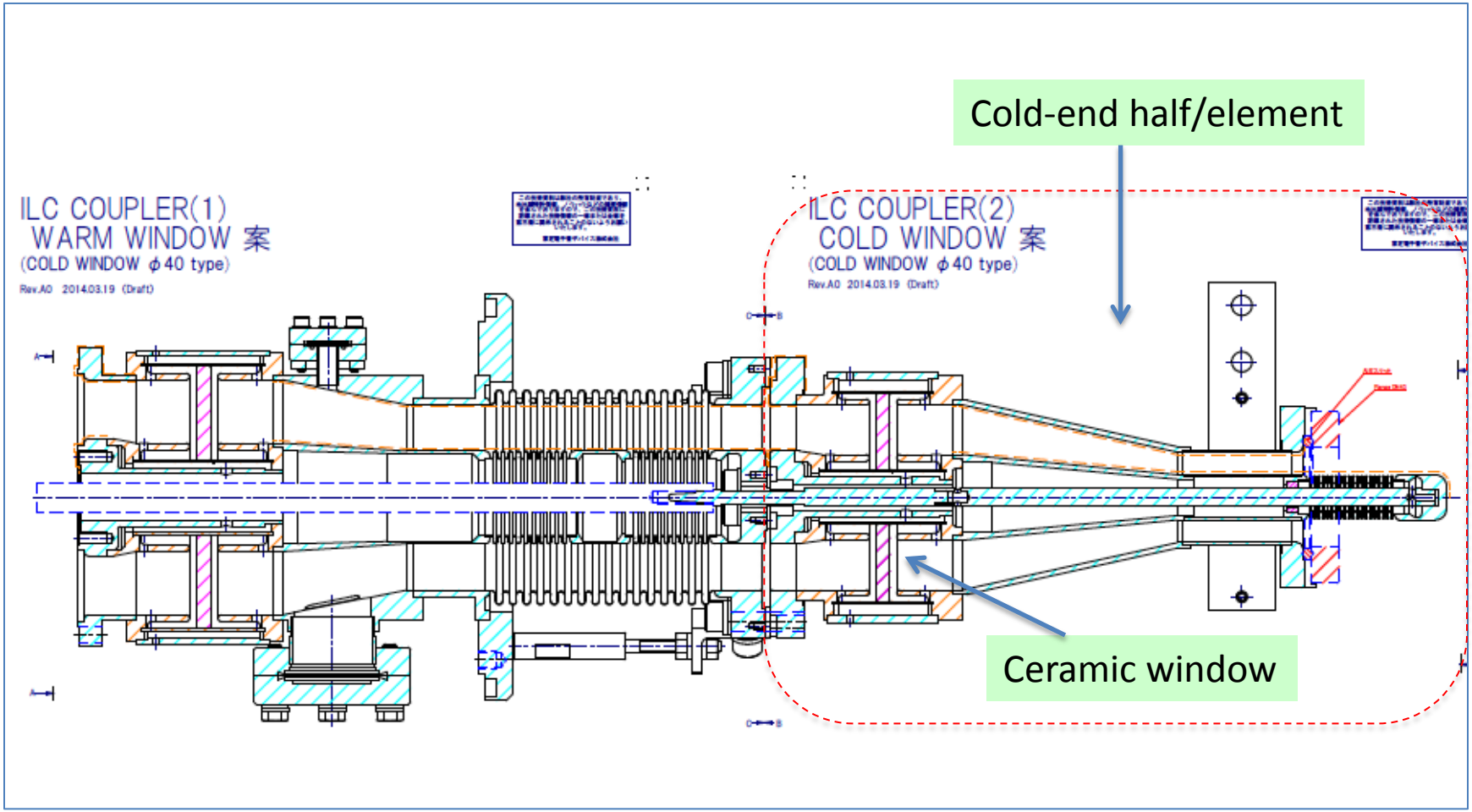

An approach with lower SEE and Lower Resistance Ceramic Window

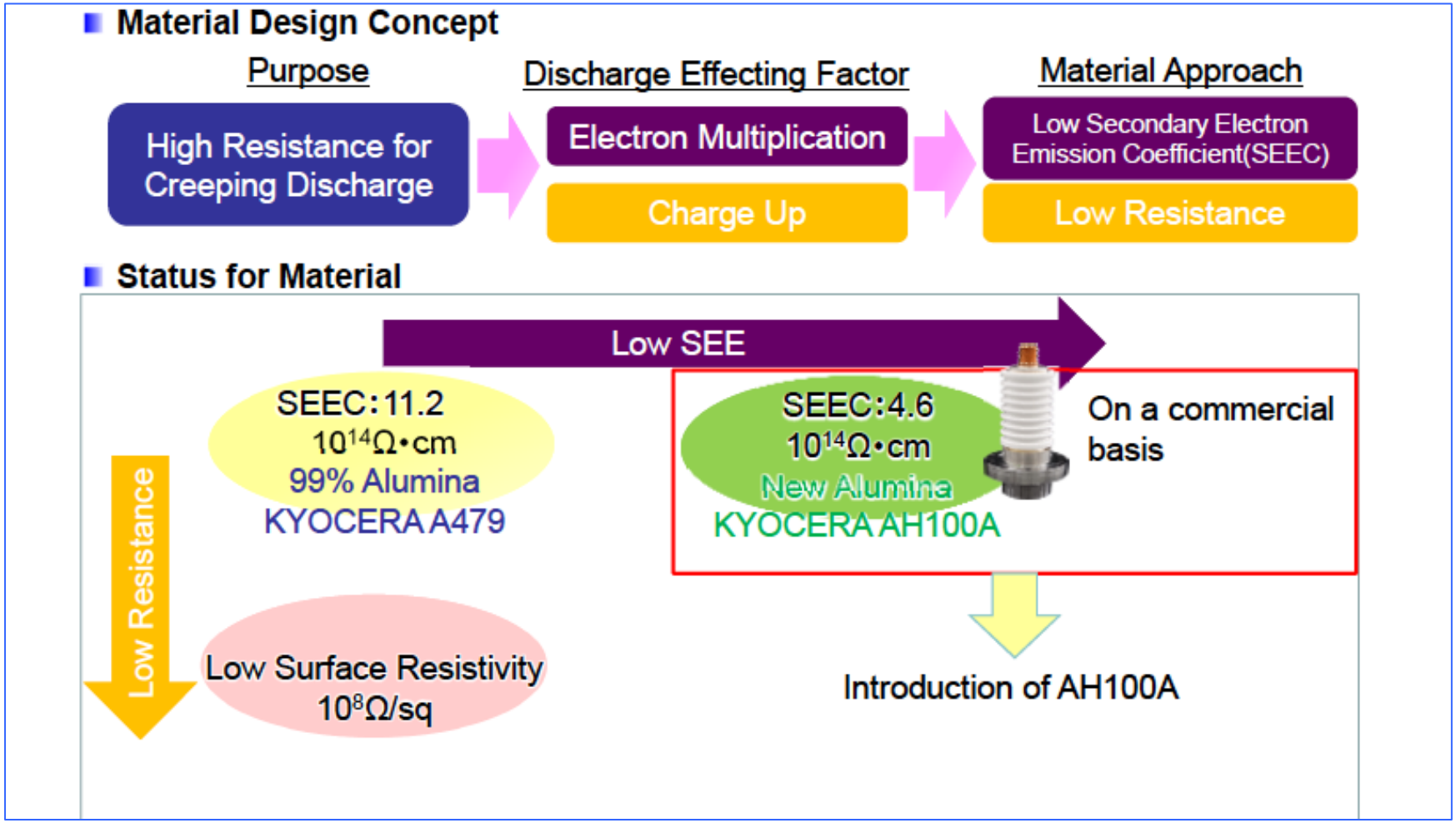

Lower Secondary Electron Emission and lower surface resistance

- **SEE (Secondary Electron Emission) Coefficient Measurement Method**

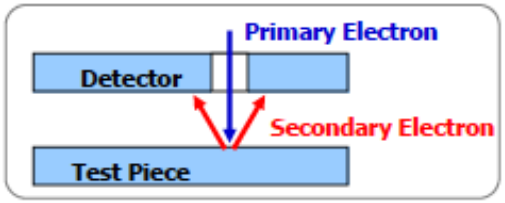

- **SEE Coefficient Measurement Result**

✓ AH100A has la factor 5 smaller SEE Coefficient than that of 99% alumina.

✓ Sample material can make SEE coefficient less than AH100A, however still higher than TiN coated alumina surface.

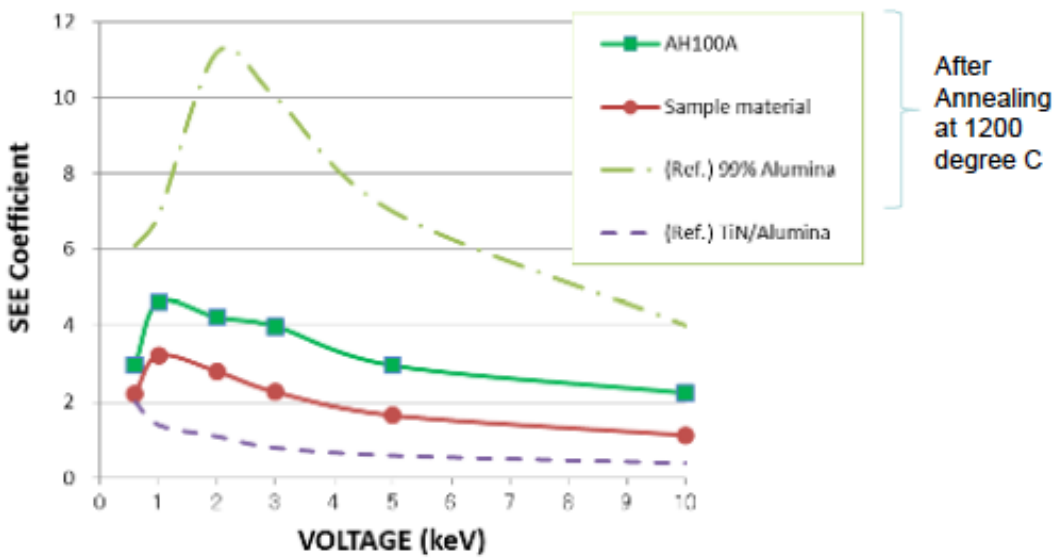

Trial/Sample Ceramic compared with conventional Ceramic

Comparison of Measurement Value for Evaluated Ceramic

<Ref. Data>

				99.8% Alumina for RF Application (A479B)	AH100A	Sample Material
Electrical Property	Volume Resistivity		ohm・cm	min. 1 X 10^{14}	min. 1 X 10^{14}	-
	Surface Resistivity		ohm/□	確認中	7.4 X 10^{15}	1.2 X 10^{14}
	SEE Coefficient		-	11.4	4.6	3.2
	Dielectric Constant	1MHz	-	9.9	10.2	-
		8GHz	-	9.9	10.0	10.0
	Dielectric Loss Angle	1MHz	-	1 X 10^{-4} *1	1 X 10^{-4} *1	-
		8GHz	-	4 X 10^{-5}	1 X 10^{-4}	3 X 10^{-3}
Mechanical Property	Ave. Flexural Strength(RT) ASTM D2442 TYPE3		MPa	300	330	-
	Young's Modulus		GPa	370	380	-
	Poisson Ratio		-	0.23	0.25	-
Thermal Property	Thermal Conductivity (RT)		W/mK	29	24	-
	Coeff. Thermal Expansion	RT-400deg.C	ppm/K	7.0	7.4	-

*1:Lower limitation of measurement method

S-band RF Transmission Test Sample

New SCRF Power-Input Coupler under development

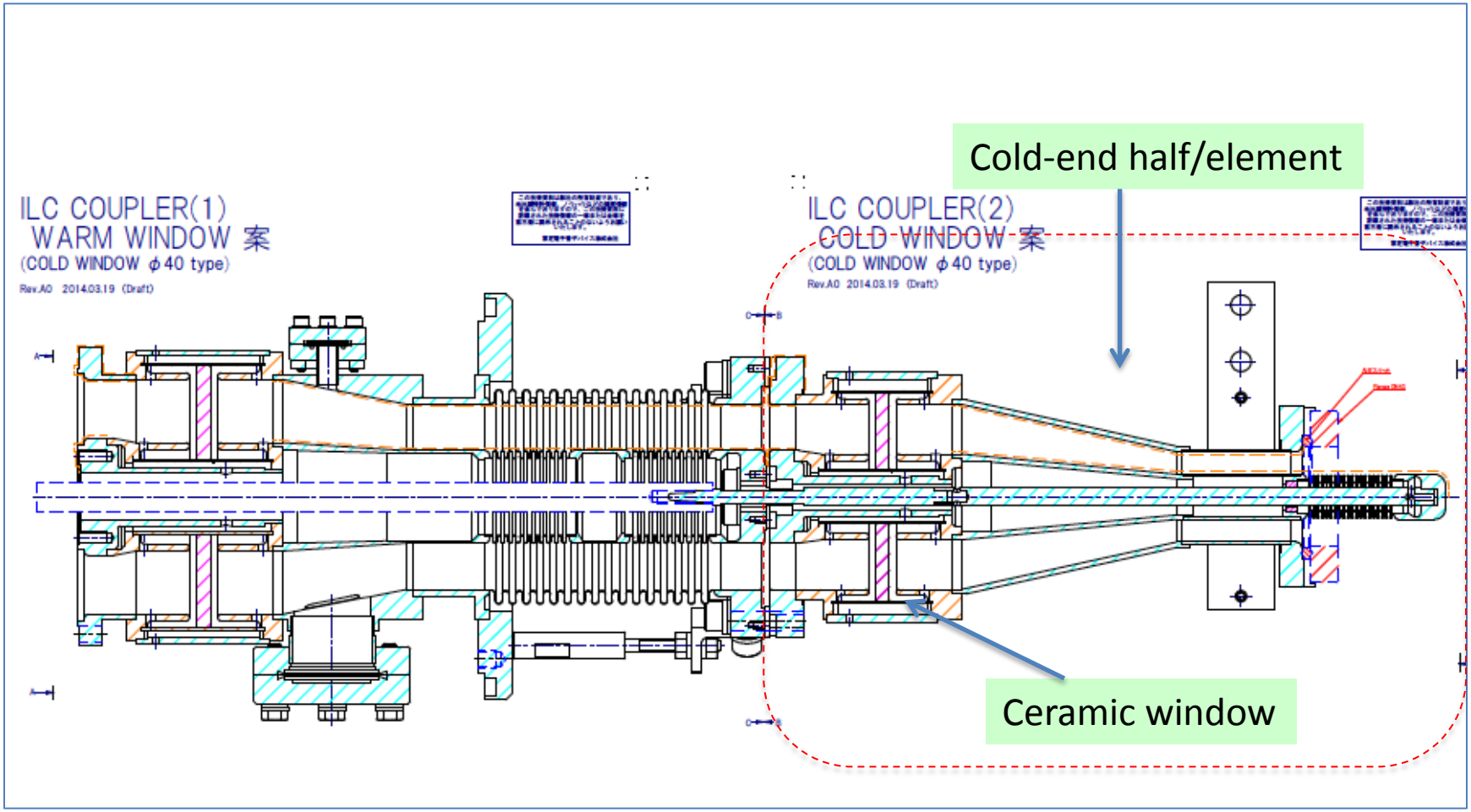

A pair of new coupler using the new ceramic insulator being developed with CERN's contribution

Cooperation with CERN and KEK

- Nano-beam handling technology >> to be reported by G. Thomas
  - Nano-beam and the stability as a common subject for both ILC and CLIC, through ATF collaboration
  - Final focusing including magnet and the mechanical stability, as well as commissioning technology, still to be investigated
- SCRF cavity integration technology,
  - Specially on input-power couplers and tuners, as a common subject for both ILC and SPL for LHC injector upgrade,
- Cryogenic engineering
  - Specially on handling of large amount of helium inventory, as a specially crucial issue in mountain region,
- Civil engineering study
  - specially for the detector-hall design,
- Radiation Safety
  - Radiation safety design and optimization

ILC Cryogenics

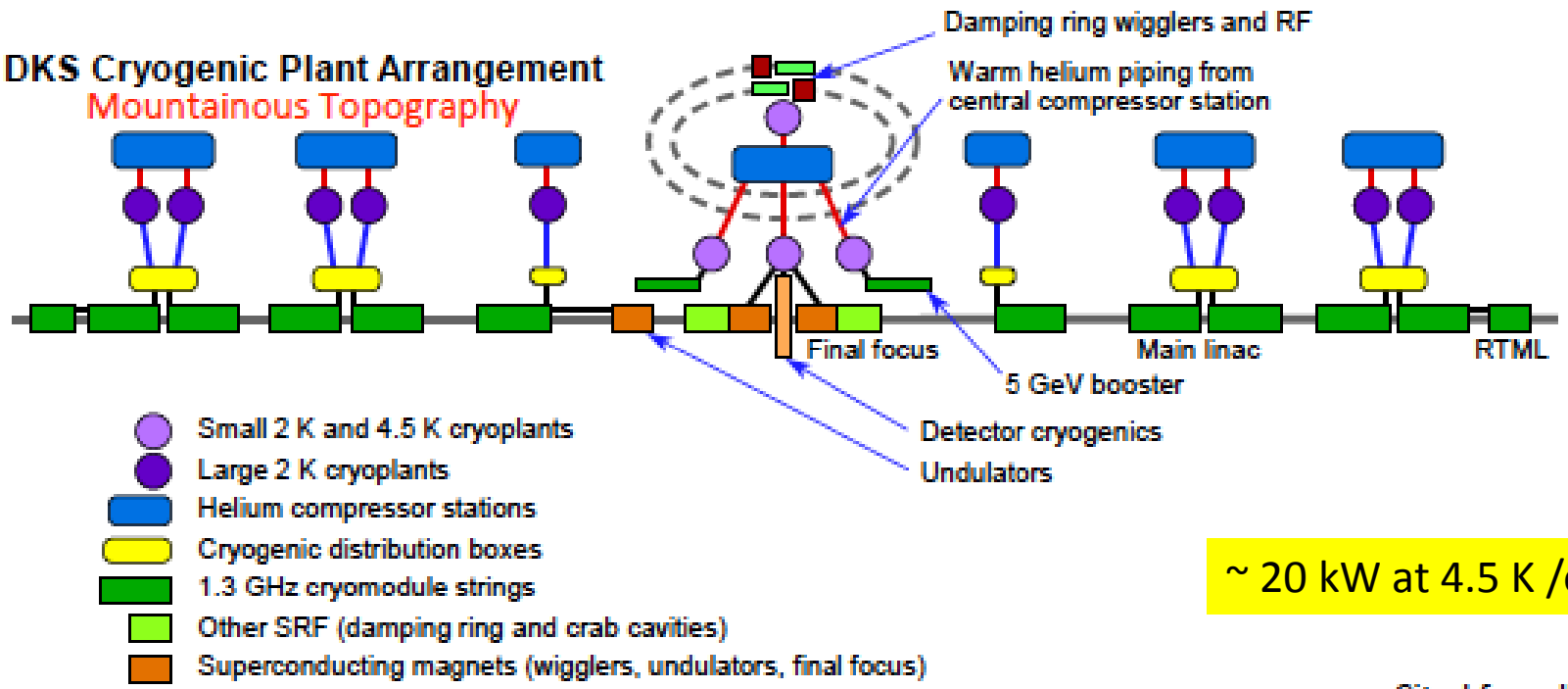

~ 20 kW at 4.5 K /each

Cited from ILC-TDR

Cryogenis scale is very similar to the LHC Cryogenics

CERN-LHC Cryogenics Diagram

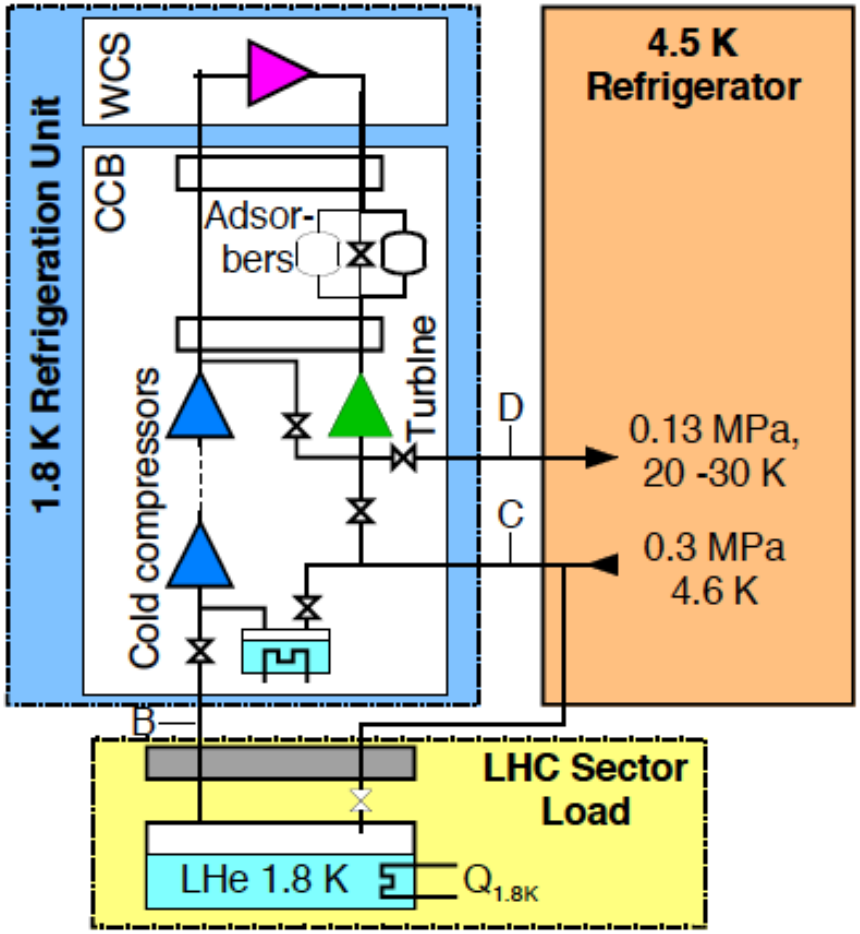

Steady state operation modes:

- Installed pumping capacity 125 g/s at 15 mbar (i.e. ~2.4 kW @ 1.8 K)
- Turndown capability: 1 to 3 without extra liquid burning
- Cold return temperature to the 4.5 K refrigerator below 30 K (reduced capacity) to 20 K (installed capacity).
- Capacity check in standalone mode (Interface B closed)

Helium Storage & Distribution

LHC helium storage & Distribution (high grade helium ring line, 2 MPa, 27 km long, for LHC operation)

[Completing the existing CERN helium recovery system: high grade, 20 MPa, 5 km long and low grade, 3 kPa & 20 MPa, 3 km long each]

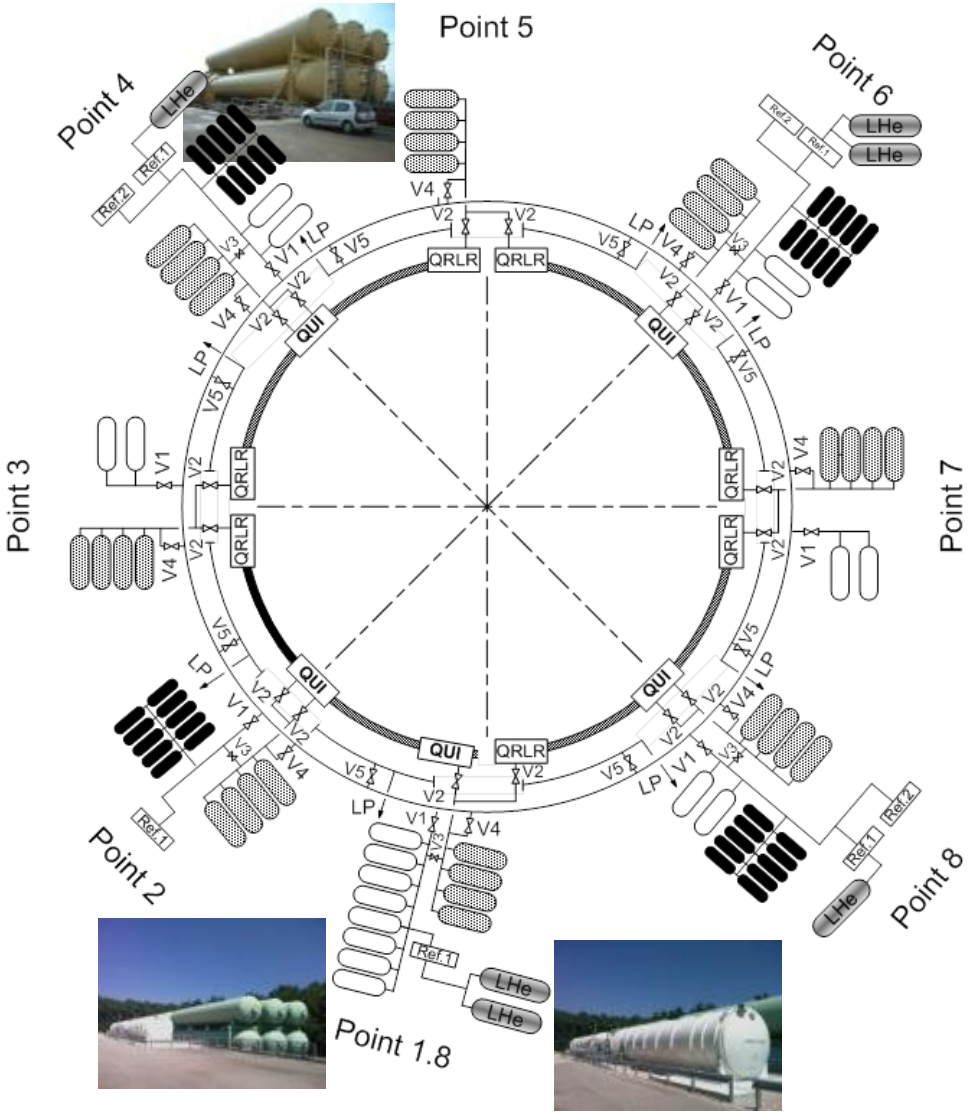

ILC Cryogenics Layout Investigated

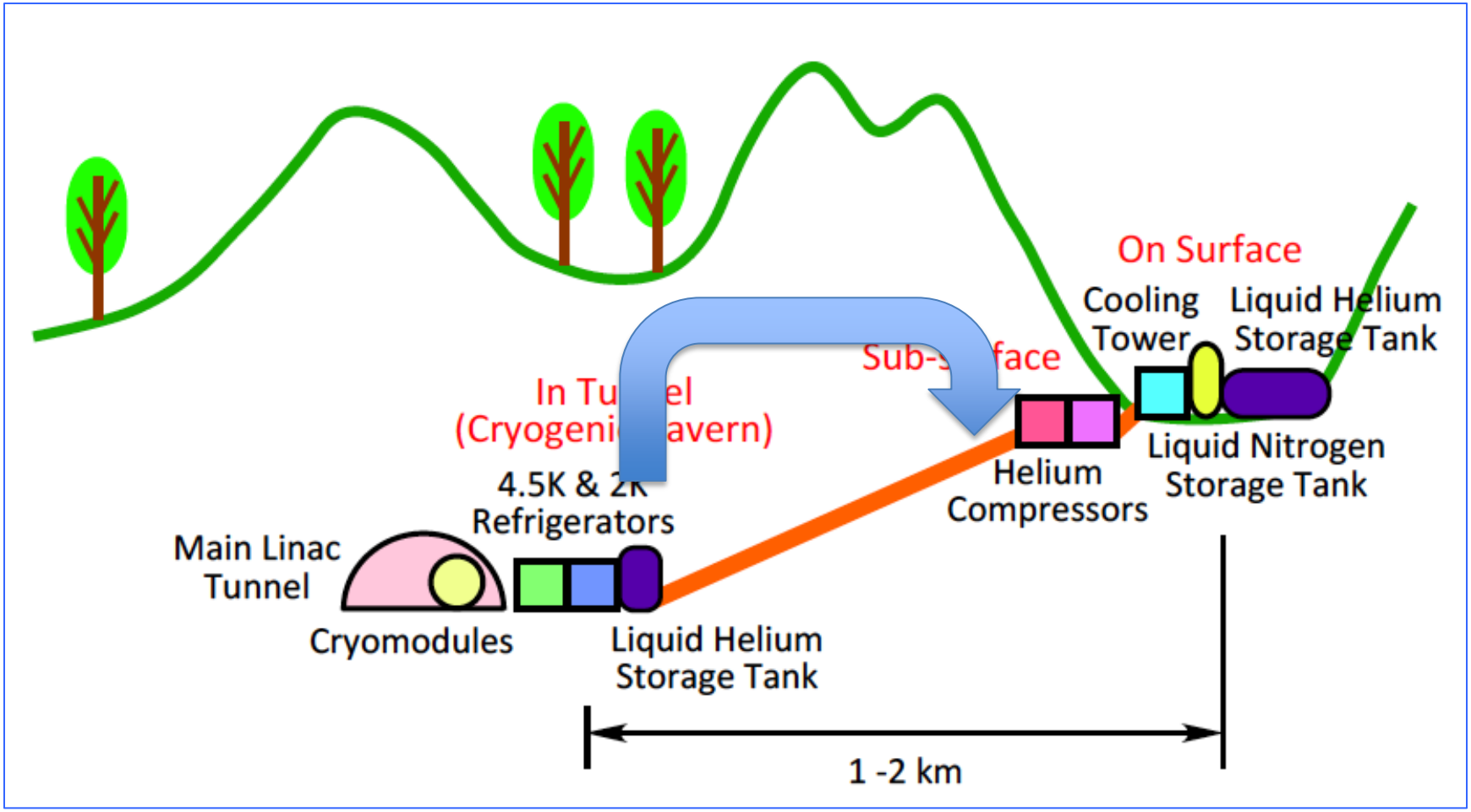

Cooperation with CERN and KEK

- Nano-beam handling technology >> to be reported by G. Thomas
  - Nano-beam and the stability as a common subject for both ILC and CLIC, through ATF collaboration
  - Final focusing including magnet and the mechanical stability, as well as commissioning technology, still to be investigated
- SCRF cavity integration technology,
  - Specially on input-power couplers and tuners, as a common subject for both ILC and SPL for LHC injector upgrade,
- Cryogenic engineering
  - Specially on handling of large amount of helium inventory, as a specially crucial issue in mountain region,
- Civil engineering study
  - specially for the detector-hall design,
- Radiation Safety
  - Radiation safety design and optimization

ILC Candidate Location: Kitakami Area

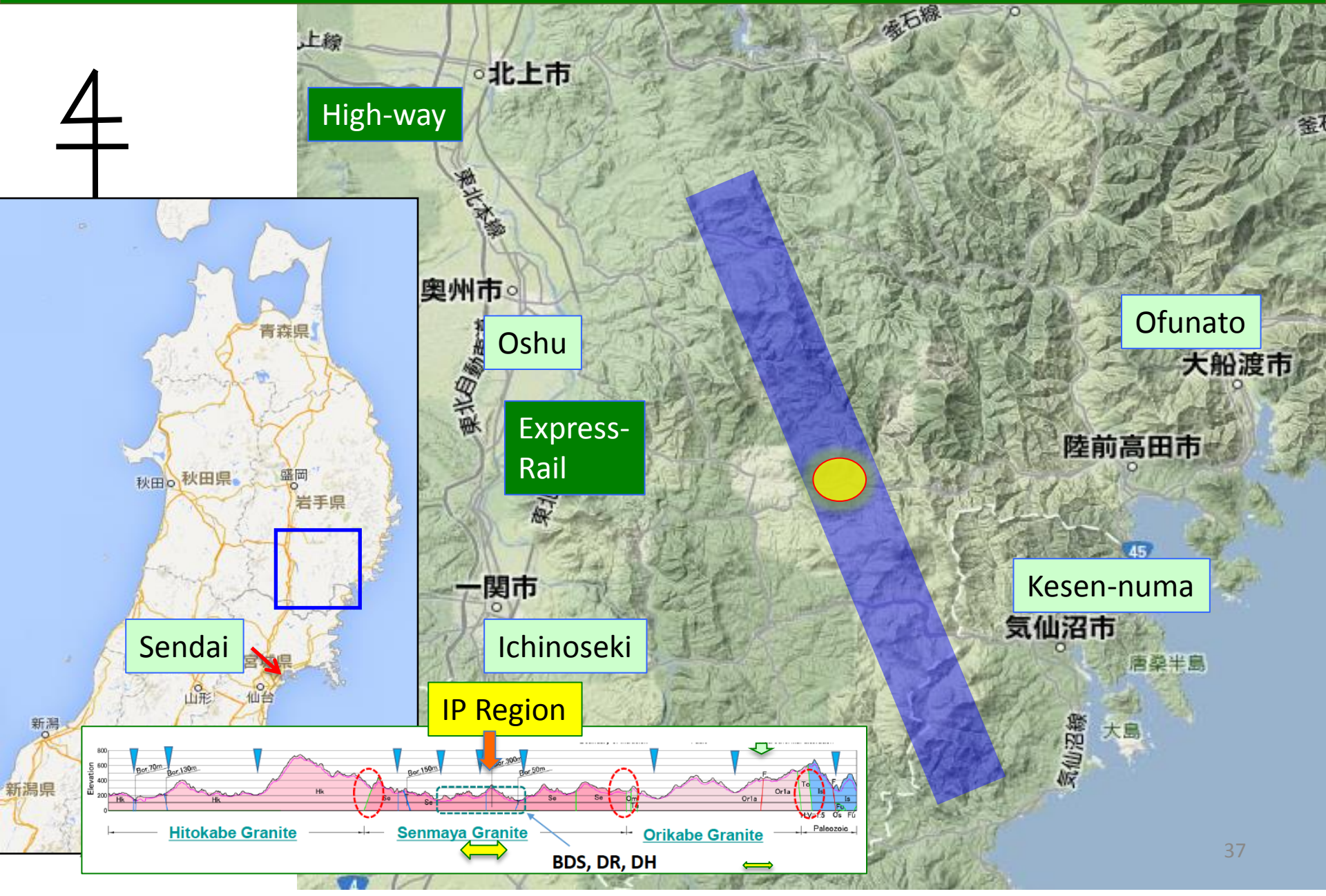

Geological Investigation

☐ Profiles of Geological Surveys along the project

Borehole Survey

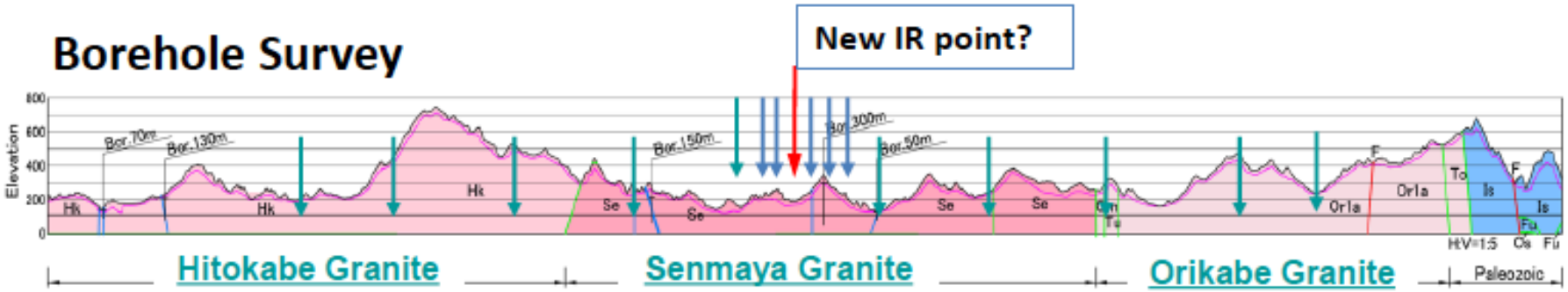

Seismic Exploration Survey

Survey area: @Bedrock boundary, Riverbed part

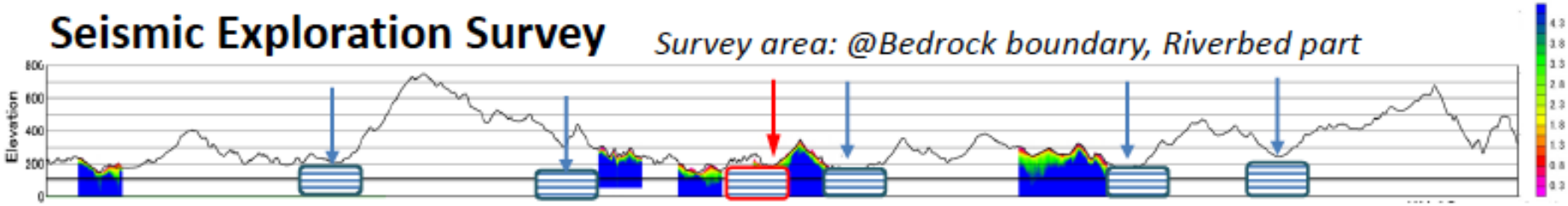

Geological Survey at pre-construction stage

	Basic Planning	Schematic Design	Detailed Design
Borehole Survey	- 1 p DH area	- 5 p DH/DR area	- 10 p along the BL
Seismic Exploration	- 1 area /1,000m	- 5 area /5,000m	0 (Additional)

B. List and H. Lars

"Kitakami" Landscape, ILC Acc., and CM Models

EDMS work, in cooperation w/ DESY & Fermilab EDMS Team

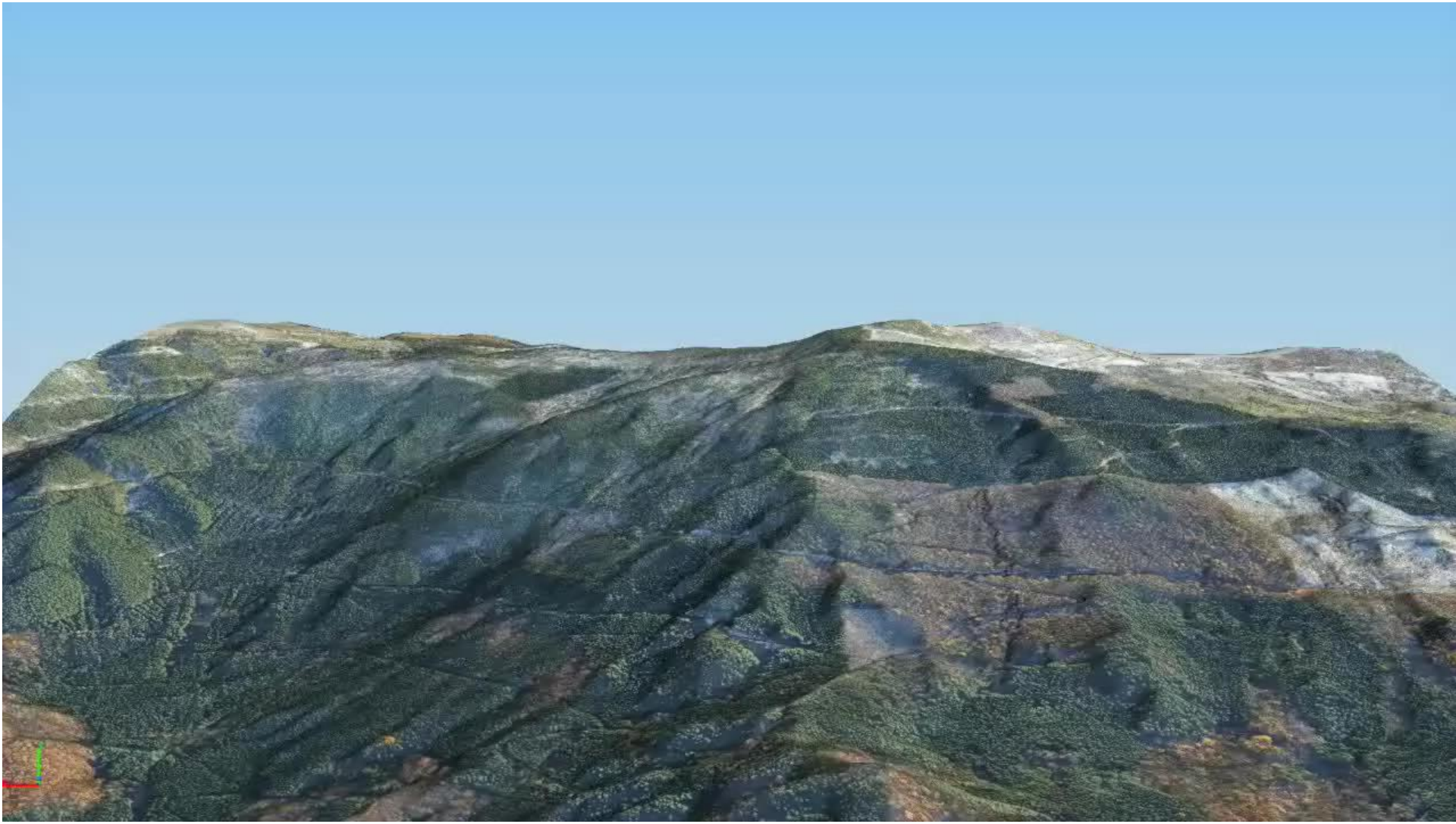

Radiation Shield Optimization

- Central Radiation Shield
  - Wall thickness is being optimized with worldwide discussion
  - CERN's expert advice is being given

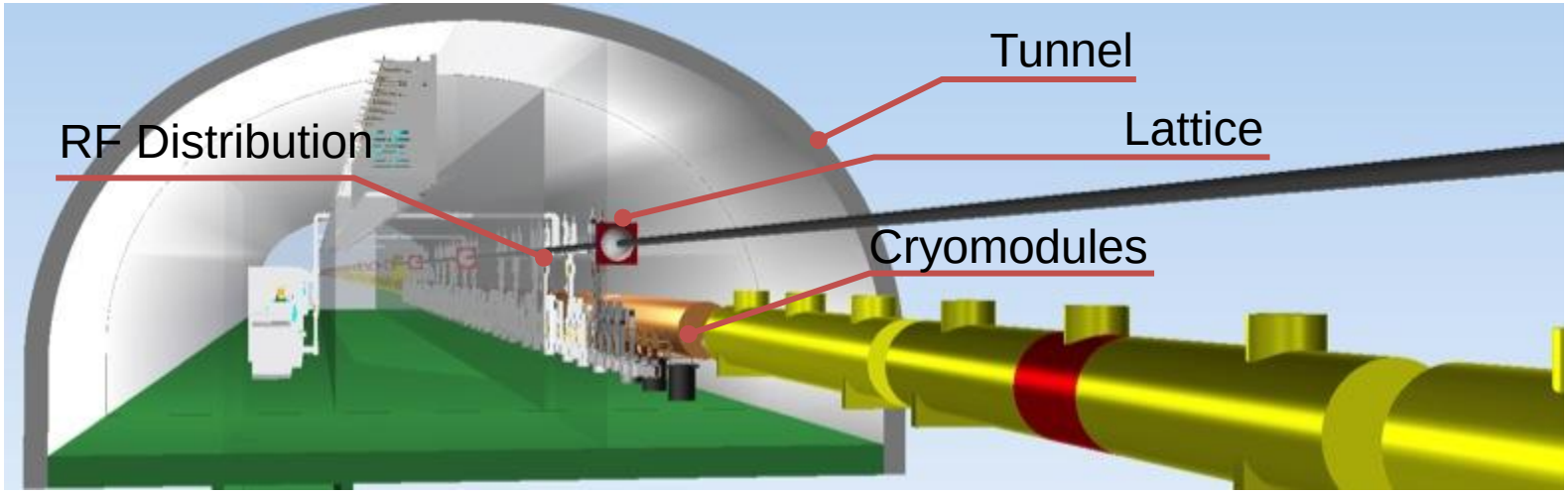

Summary

- ILC published Technical Design Report in 2013, and is getting into the “preparation phase”.

- The new organization has been established with merging the ILC and the CLIC project under the Director-ship by Dr. L. Evans.

- It includes significant CERN’s participations in the world-wide organization, specially for DR, BDS, SRF, Cryogenics, CFS, and Radiation Safety, and further close cooperation is being realized.

- *We would thank CERN’s cooperation and special support for maximizing the ATF operation in the critical stage approaching a design goal of the R&D in final focusing.*

backup

ILC Project Overview

Years	TDR baseline Scenario
1 - 2	Pre-preparation for 2yrs (for technical effort continuity) 前段階・先端技術開発の継続（２年）
3 - 6	Preparation (4 yrs) ILC 建設への準備段階（4年）
7 - 15	Construction (9 yrs) 建設（9年）
(12 -)	(start installation) 組み込みの開始
(13 -)	(start preparation for Commissioning and operation (to be studied) 運転経費（加速器要素・試験設備運転等）の段階的立ち上げ (検討要）
16 -	Beam Commissioning start ビームコミッショニングのスタート
17 –	Operation at 250 ~ 500 GeV (550 GeV) 物理実験 @ 250 ~ 500 GeV (550 GeV)
TBD	Toward 500 GeV HL upgrade ルミノシティーアップグレード(500 GeV)
TBD	Toward 1 TeV upgrade エネルギーアップグレード (1 TeV)

Management of Cryogenic Fluids

- Total **HELIUM** inventory at CERN: 170’000 kg
- LHC (accelerator & detectors) helium full inventory: 136’000 kg
- Additional strategic permanent storage during operation: 15’000 kg

- In situ helium liquefaction for central services (up to 350’000

and distribution by means of mobile containers ranging from 1

(users without dedicated cryogenic plant)