The ALICE TPC: from wires to GEMs

C. Garabatos, GSI

On behalf of the ALICE collaboration

Outline

- The current ALICE Time Projection Chamber: some borrowed and some self-developed features
- Performance overview
- The upgrade
  - GEM chambers
  - towards RUN3

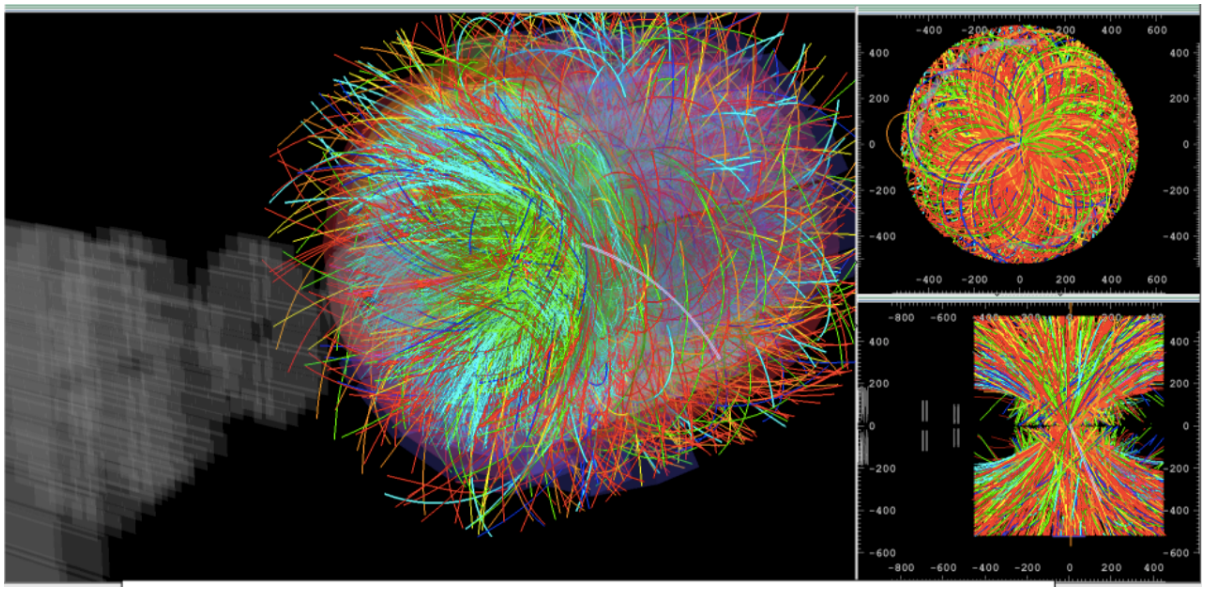

The ALICE TPC

- The largest TPC
- Probably the last accelerator TPC with wire chambers
- 90 m^3 of Ne-CO_2(-N_2) or Ar-CO_2
- 36 Inner and Outer Readout Chambers
- 100 kV at Central Electrode
- Over half a million readout pads
- Operates at interaction rates of a few 100 kHz in pp and few kHz in Pb-Pb

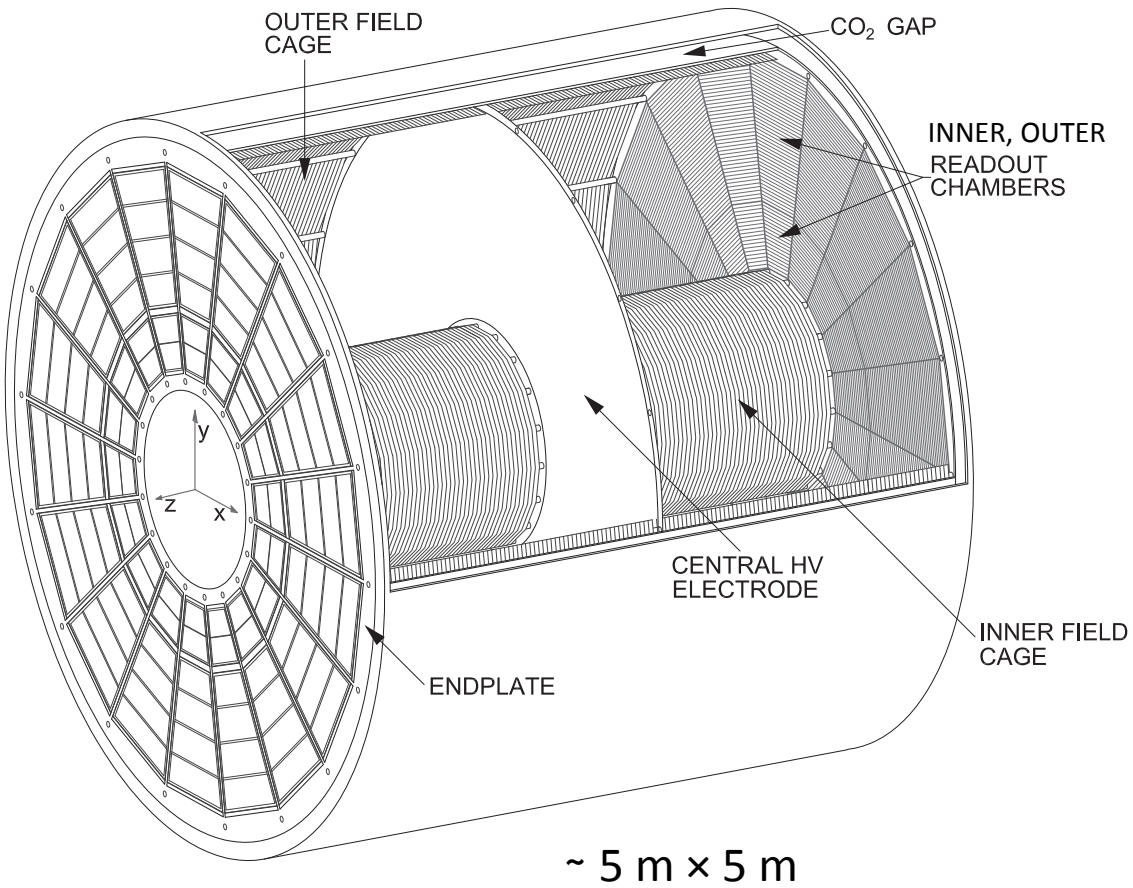

Field Cage

- Suspended strips à la NA49 solve problems with charging up and dust collection on the FC walls

- Gas circulated radially through many small holes along supporting rods
- FC walls, light and gas tight, carry their own resistor chain to evacuate the charge produced in the CO_2 insulation gaps
- Central electrode made with full Al-mylar to exploit the laser image of it onto the ROCs

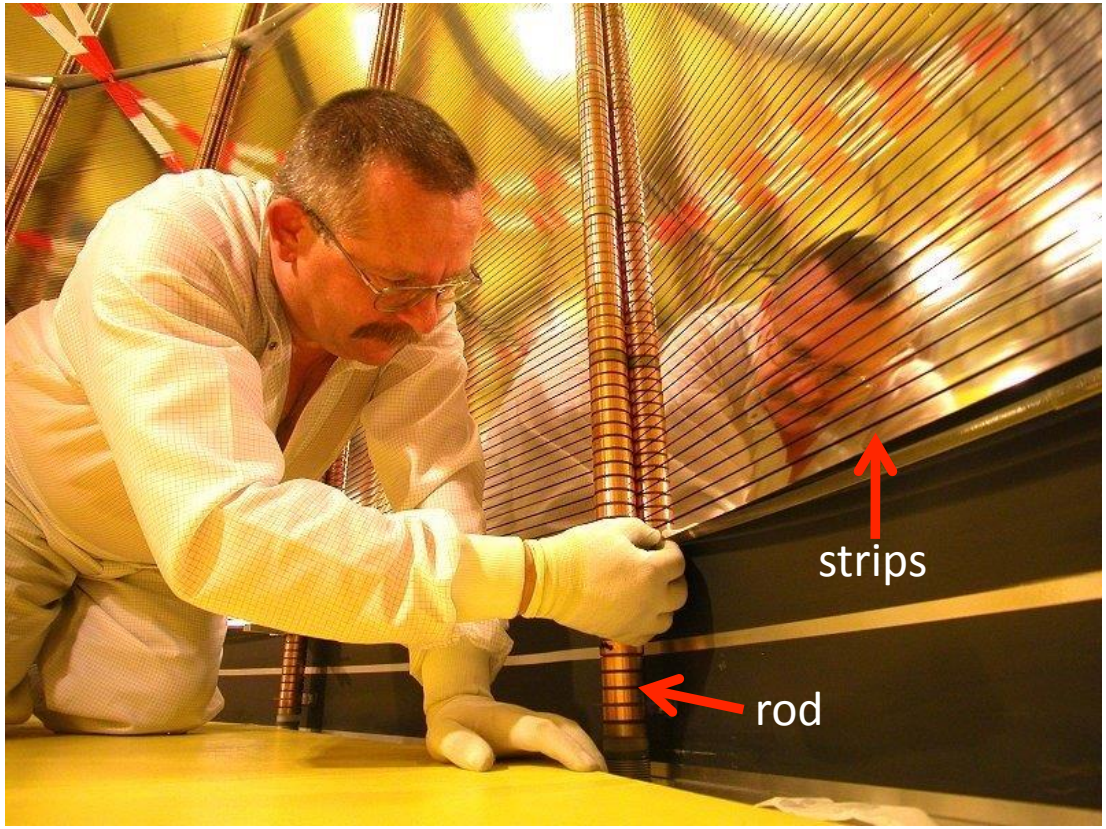

Water cooled, removable resistor rods

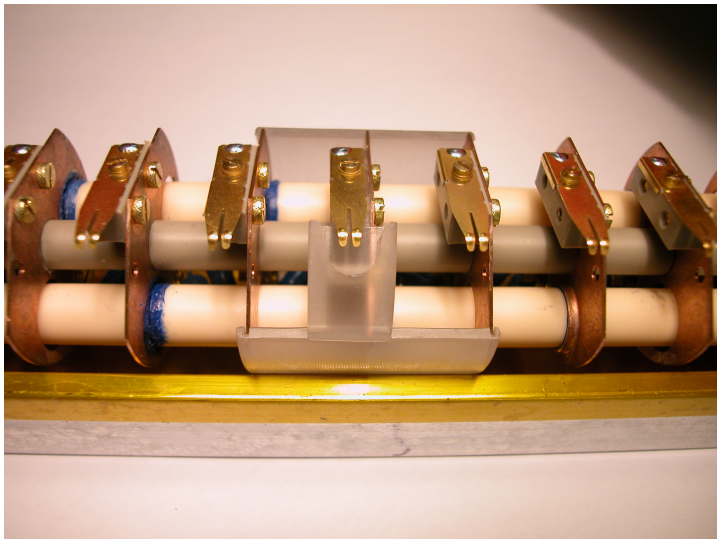

- Four removable rods with a resistor chain cooled with ultra-pure water and contacts to the strip hooks are shafted into support rods

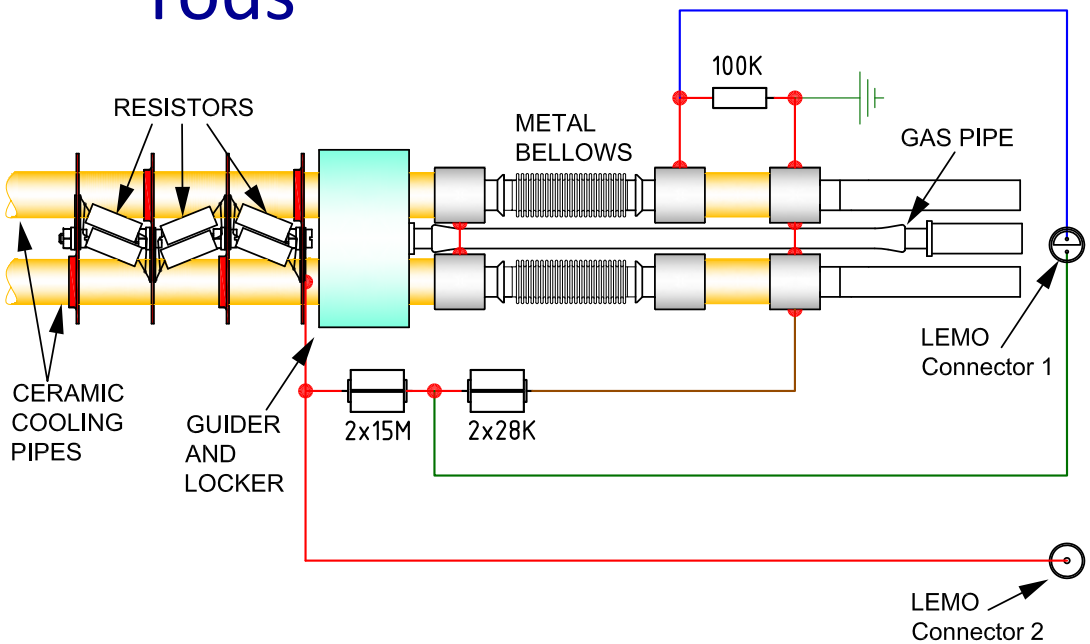

☞ All dissipated power in the TPC is removed via water cooling; thermal screens cover the detector almost all around

Readout chambers

- Insertion à la ALEPH to minimise acceptance losses
- MWPC equipped with a Gating Grid electrode, à la ALEPH, DELPHI, NA49, STAR, to limit both dose and space charge

☞ The GG opens for 100 μs upon a trigger and stays closed for ≈200 μs before accepting another trigger. Thus, the intrinsic trigger rate limit of these chambers is 3 kHz

Some more original features

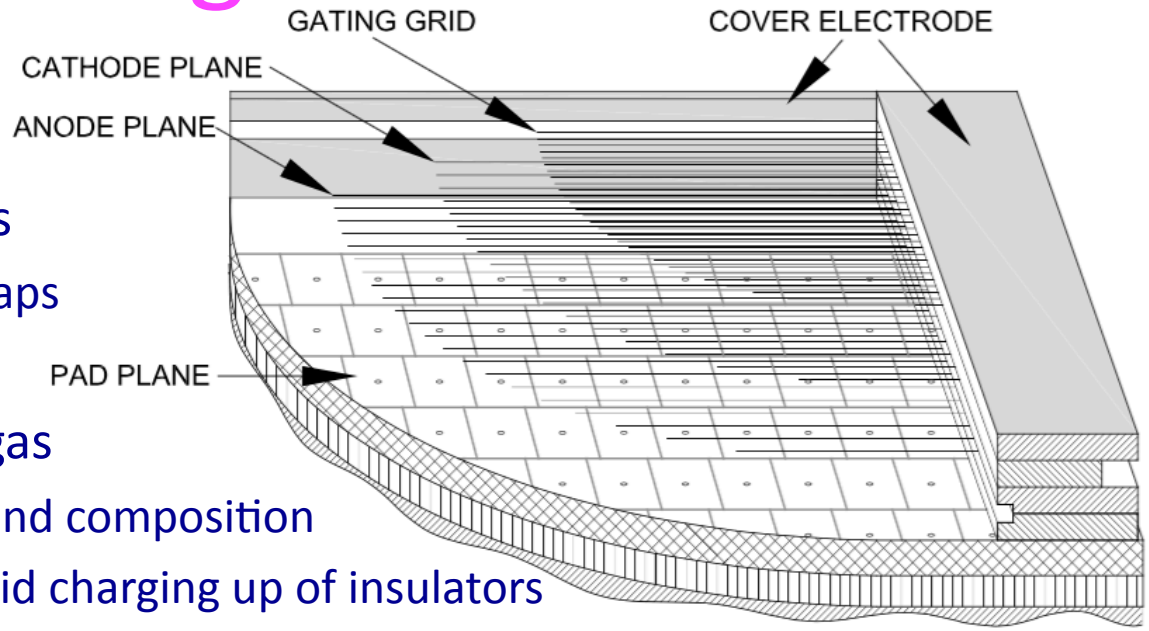

- Cover electrodes for chambers
  - matches the drift field and traps escaping ions
- Addition of N_2 to the Ne-CO_2 gas
  - need constant temperature and composition
  - also add 100 ppm H_2O to avoid charging up of insulators
- Full image of central electrode from laser stray light for online drift velocity calibration
  - optics for producing laser tracks copied from STAR
- ALICE TPC ReadOut (ALTRO) chip with digital baseline correction filters
- Readout Control Units (RCU) with FPGAs and SEU correction
- Online data compression (factor ≈ 4) with High Level Trigger

Performance: p_T resolution

- For 2013 p-Pb data with Ne-CO_2 (90-10):
  - $\sigma_{p_T}/p_T \lesssim 3.5$ % at 50 GeV/c
  - 10% degradation in Pb-Pb
  - $\sigma_{p_T}/p_T < 1$ % at 1 GeV/c
- Best performance with combined TPC-ITS tracks

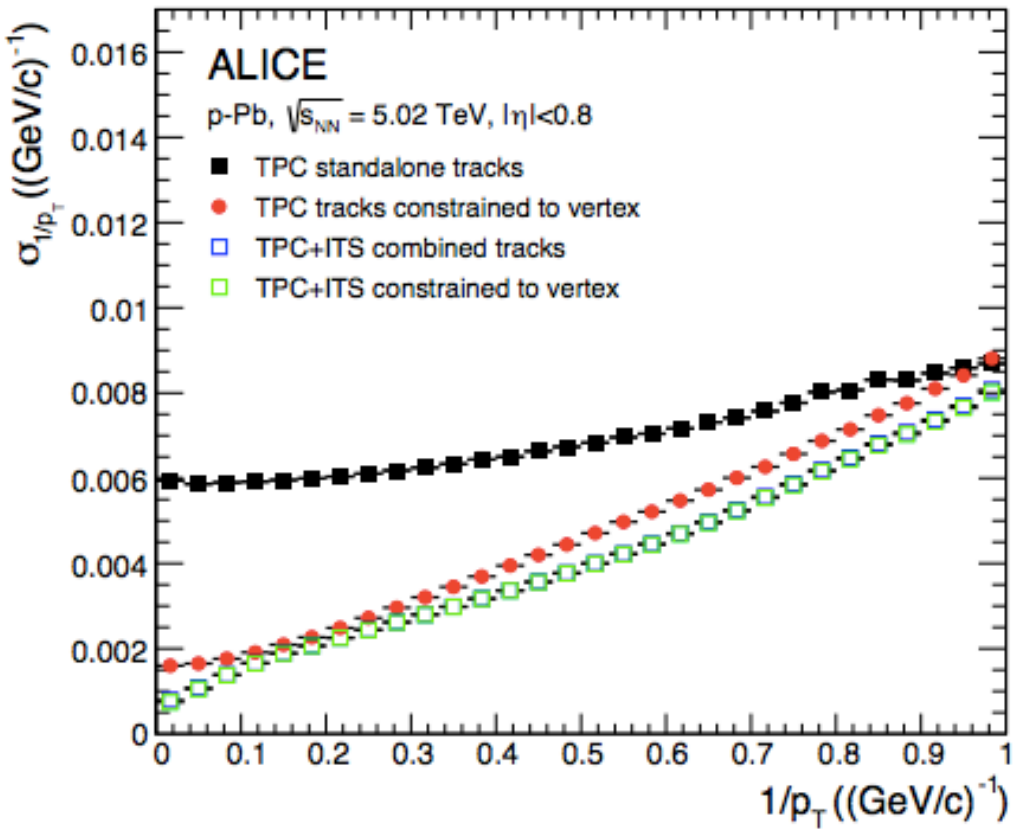

Performance of the ALICE Experiment at the CERN LHC, Int. J. Mod. Phys. A 29 (2014) 1430044

Performance: dE/dx

2015 pp data at B = 0.2 T, Ar-CO_2 (88-12)

- With Ne-CO_2:
- $\sigma_{dE/dx} \approx 5.5$ % in pp
- $\sigma_{dE/dx} \approx 7$ % in central Pb-Pb
  - deterioration due to overlapping clusters

☞ Single-pad gain calibration with ^{83}Kr decays in the gas

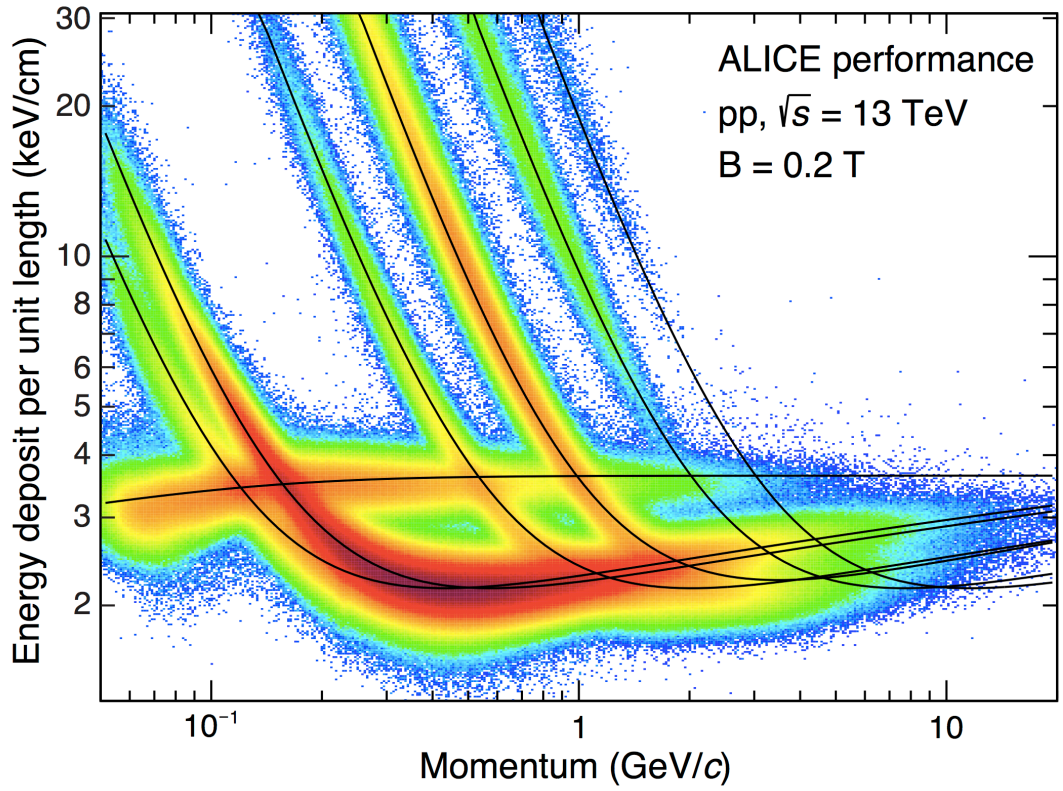

The TPC upgrade

- Expect, and inspect, 50 kHz Pb-Pb in RUN3 (2021) and RUN4

1. GG limit at 3 kHz
   - continuous readout needed
   - new readout electronics!
2. Space charge near anode wires
   - high rate capability needed
3. Space charge in drift volume
   - solution with IBF < 1 % (Ion Back Flow: fraction of ions drifting back: < 20 at gain 2000)
4. Maintain dE/dx and momentum resolution

ALICE upgrades for RUN3: see related posters and 'Upgrade of the ALICE ITS' by P. Riedler

Replace MWPCs with GEMs

- Ion Back Flow in a GEM system was reduced from > 5 % (3 GEM) to < 1% (4 GEM)
  - discovered enhanced ion trapping at high rates
- Excellent dE/dx performance maintained, demonstrated also with test beams
- Robust against discharges, with alpha sources and test beams
  - Ne-CO_2-N_2 (90-10-5)

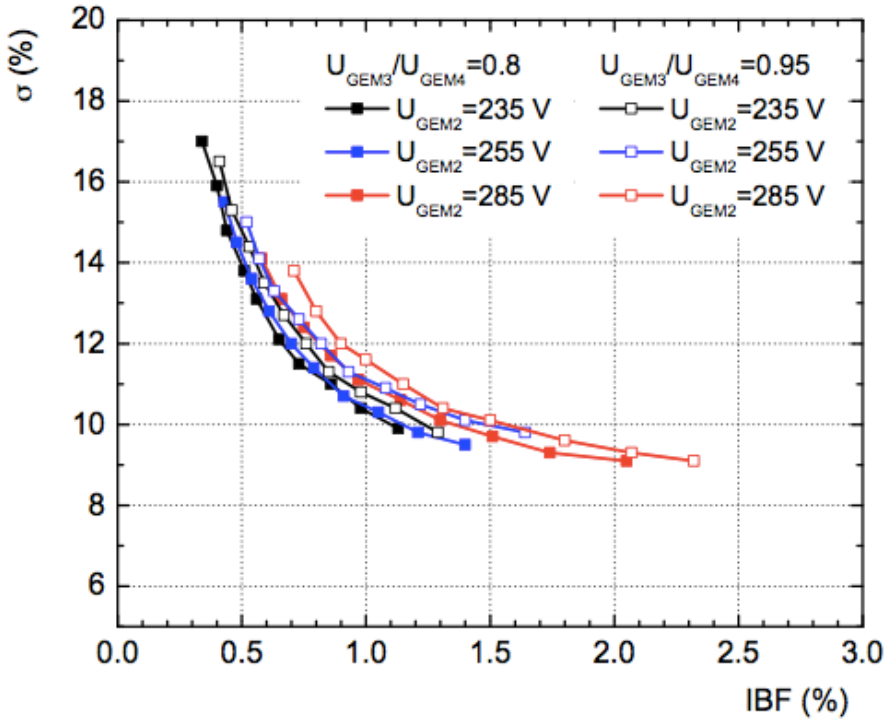

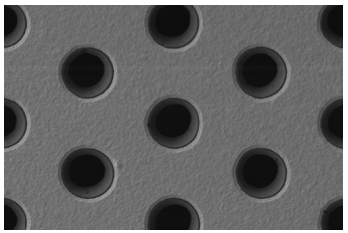

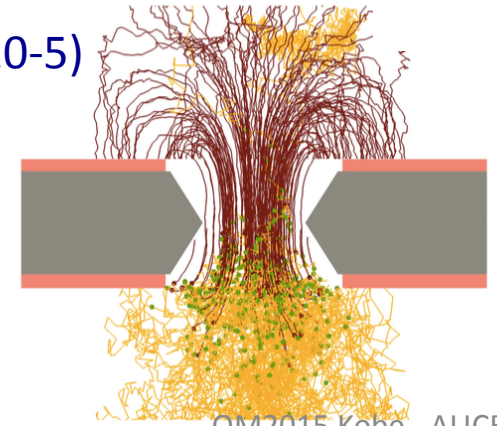

☞Use both S (standard) and Large-Pitch foils in a S-LP-LP-S configuration

✓rotated 90° from each other

✓unsegmented side of first GEM faces drift space

Reconstruction and corrections

- Main challenge are space-charge distortions of up to 20 cm
- Real-time map of distortions is used for online track reconstruction
- In a second stage, the required momentum resolution, with combined TPC-ITS tracking, is achieved

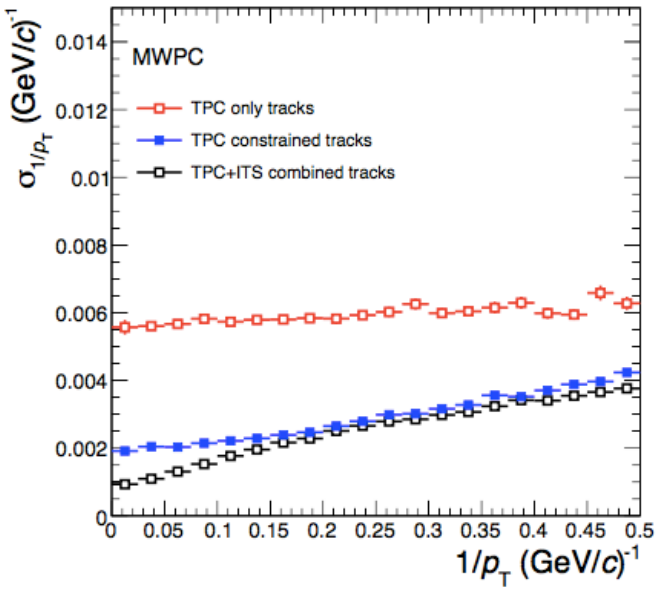

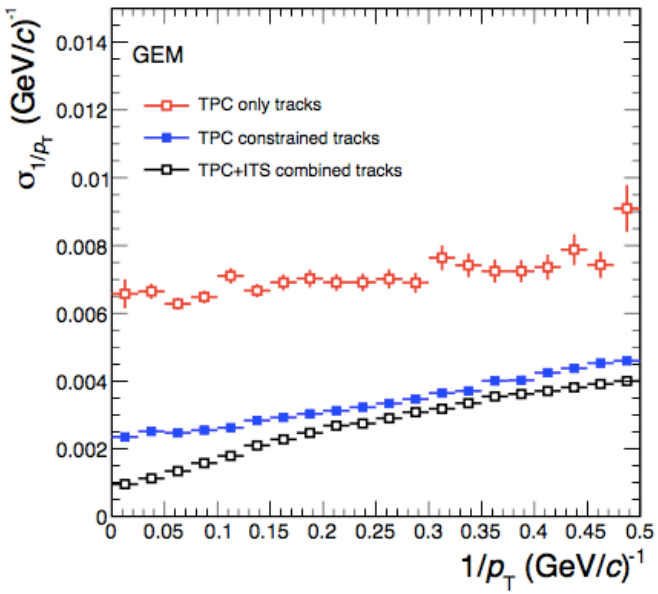

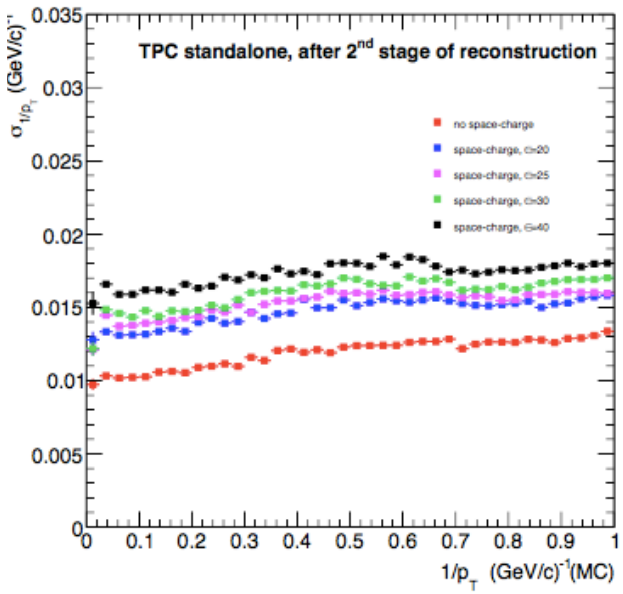

Comparison of $1/p_T$ resolution for wires and GEMs

GEM performance at increasing multiplicities.
Expected: blue points

Preproduction

- Full sized prototypes of both chamber types have been produced and operated
  - reuse existing wire chambers

- Full chambers with new pad-planes etc and close-to-final GEM foil being produced now

Single-mask GEM technology allows for production of ~1 m foils

Production and installation

- Start production Q4 2015
  - QA and transport of foils, stacks, chambers
  - readout electronics (SAMPA, FECs, CRUs)
- TPC to surface Q1 2019
  - replace chambers
  - install new electronics
  - precommission
- Commission in cavern
  - through 2020

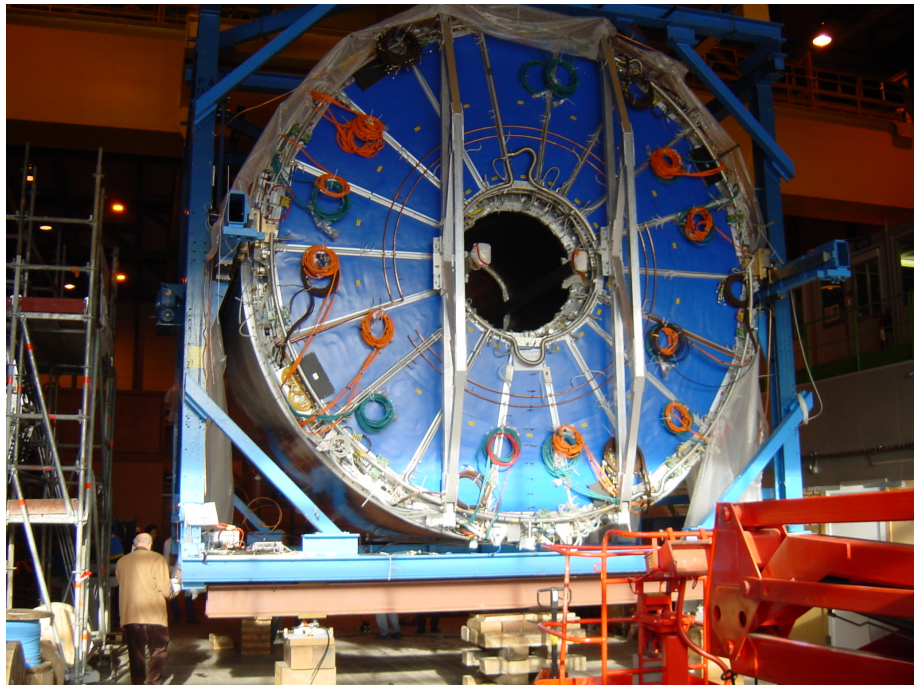

Summary

- The ALICE TPC employs many features developed for earlier TPCs and incorporates some of its own
- Excellent performance under high rates and/or multiplicities at the LHC
- Chambers and electronics will be replaced during LS2 for 50 kHz Pb-Pb in RUN3+4 by GEM stacks and continuous readout electronics

BACKUP

dE/dx with IROC prototype

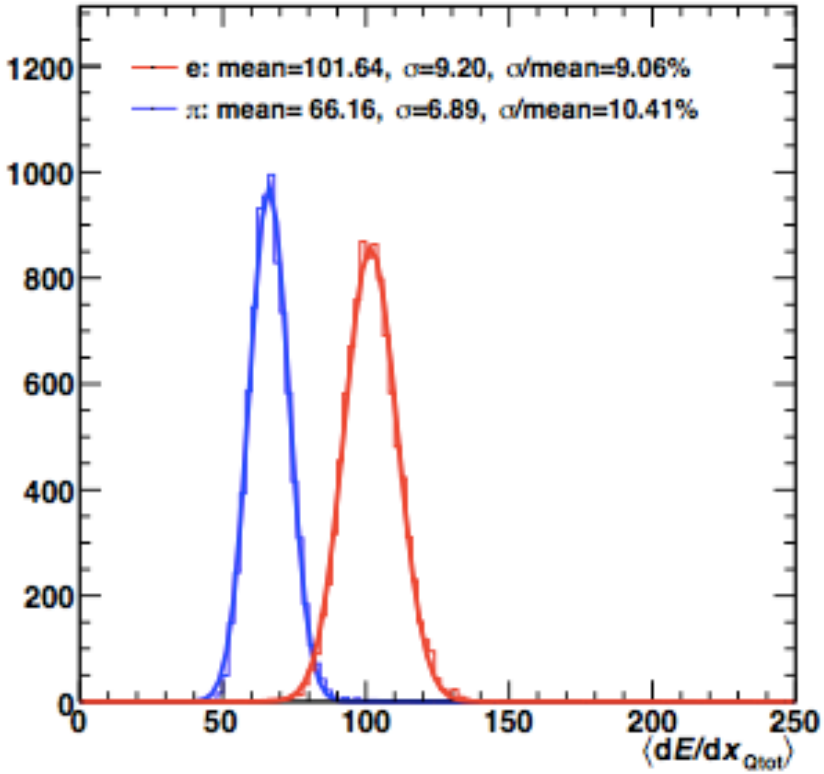

dE/dx for π and e at gain 2000

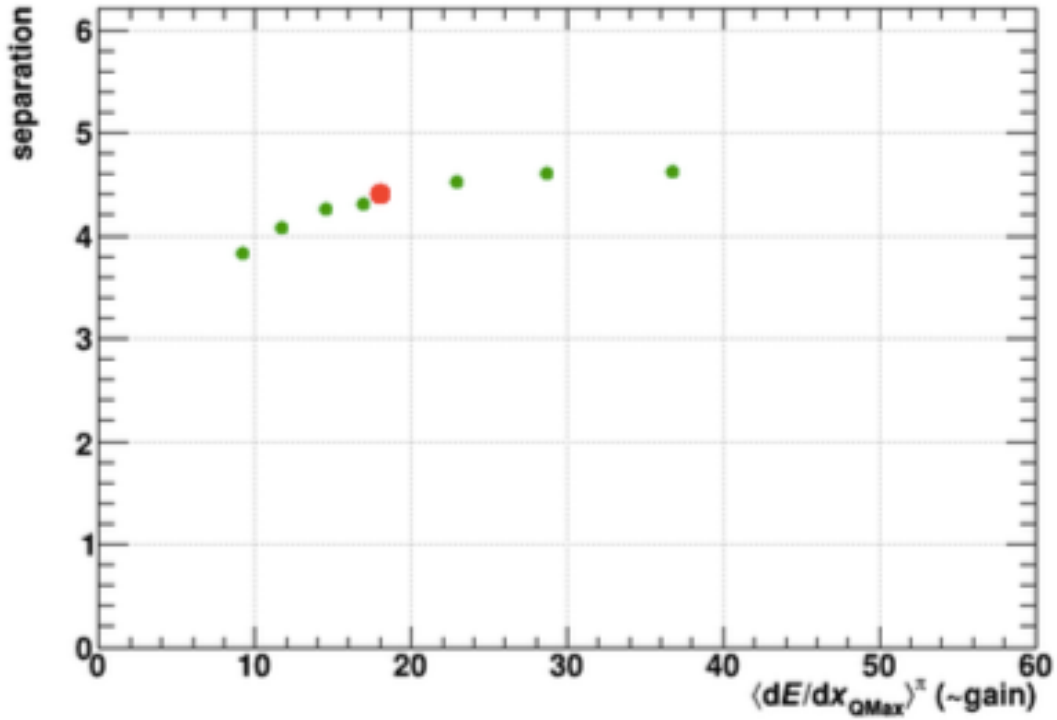

Separation power as a function of gain

Discharge studies with α sources

	G = 1000	G = 2000	S-LP-LP-S $IB = 0.63\%$ G = 3300	G = 4000	G = 5000
$^{239}Pu+^{241}Am+^{244}Cm$ $E_\alpha = 5.2+5.5+5.8$ MeV rate = 600 Hz		$< 3.1\times10^{-9}$		5×10^{-9}	$(1.8\pm1.1)\times10^{-8}$
^{241}Am $E_\alpha = 5.5$ MeV rate = 11 kHz	$< 1.1\times10^{-8}$	$< 1.5\times10^{-10}$	$< 7.1\times10^{-10}$		

Documents and other talks

- Mar-2014 TDR
  http://cds.cern.ch/record/1622286/files/ALICE-TDR-016.pdf
- Sep-2014 Taku Gunji, plenary talk in ALICE week
  https://indico.cern.ch/event/312789/session/20/contribution/41/material/slides/1.pdf
- Feb-2015 TDR Addendum 1
  http://cds.cern.ch/record/1984329/files/ALICE-TDR-016-ADD-1.pdf
- Mar-2015 Jens Wiechula, plenary talk in ALICE week
  https://indico.cern.ch/event/331319/session/13/contribution/21/material/slides/0.pdf
- Mar-2015 Piotr Gasik, talk in Technical Board
  https://indico.cern.ch/event/366133/contribution/11/material/slides/0.pdf
- Apr-2015 TDR Addendum 2

Frond-end electronics base on the SAMPA chip

FEC Version A:

- 2 GBTx
- 1 VTTx
- 1 VTRx
- 2 data links
- 1 TTS link

FEC Version B:

- 1 GBTx
- 1 VTRx
- 1 data link
- 1 TTS link

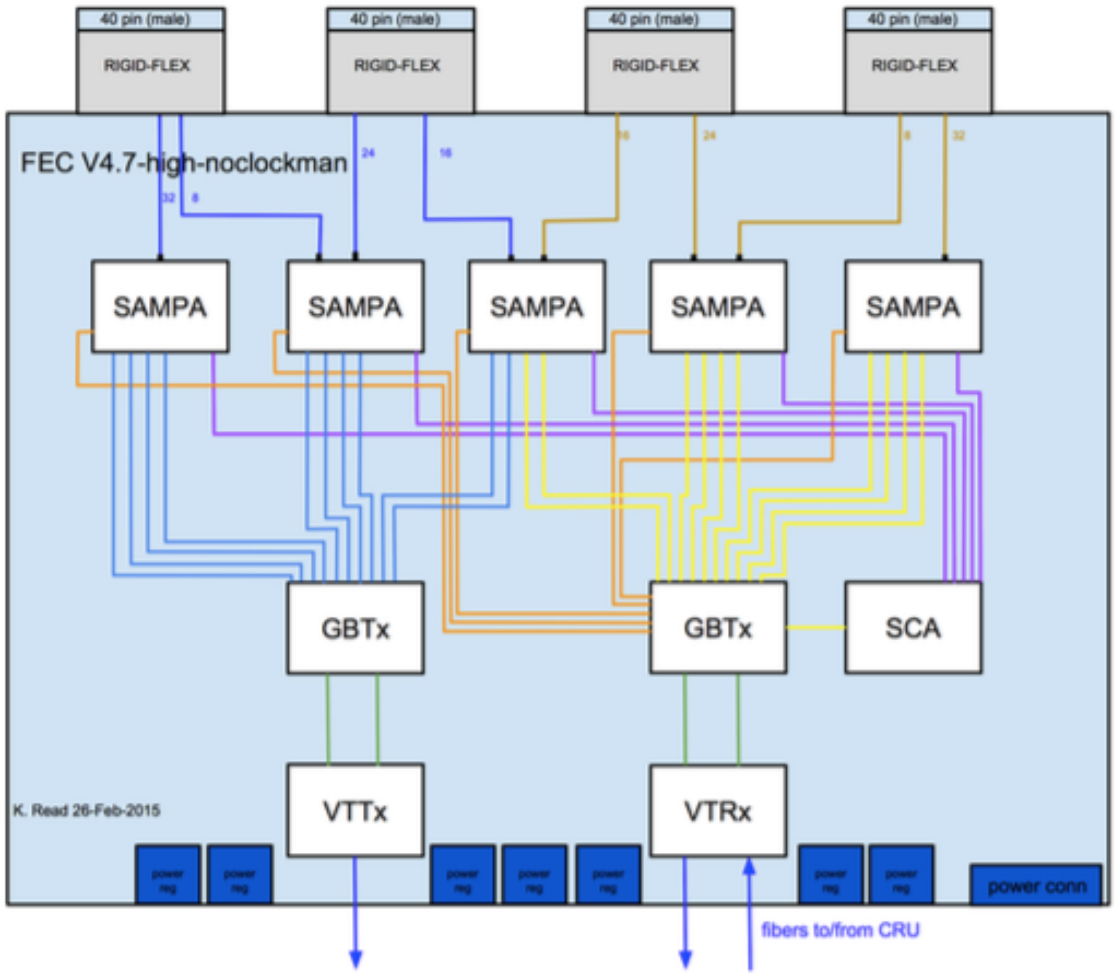

Calibration and reconstruction flow

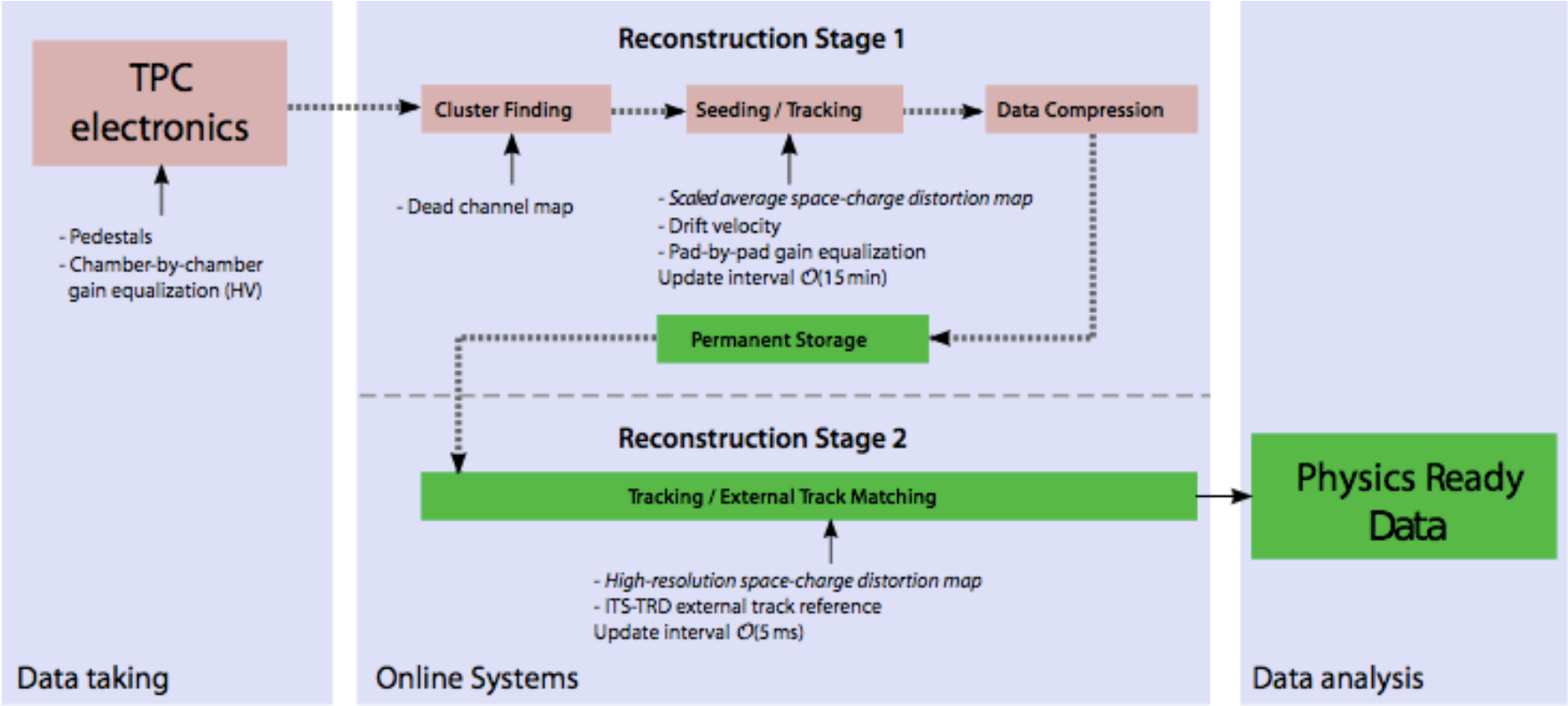

- Data compression through Zero Suppression and/or Huffman compressions, clusterisation, and non-relevant data removal