The **E**lectron **C**apture in ^{163}**Ho** experiment

Stephan Scholl
on behalf of the
ECHo Collaboration

Kepler Center for Astro and Particle Physics,
Eberhard–Karls–Universität Tübingen

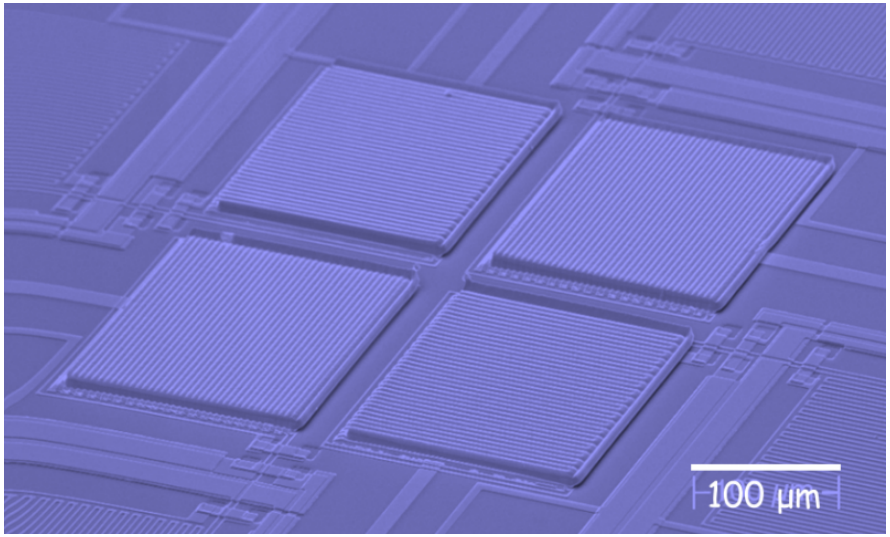

European Physics Society Conference on High Energy Physics, Vienna, July, 24th 2015

$$^{A}_{Z}X + e^{-} \rightarrow ^{A}_{Z-1}Y^{\star} + \nu$$

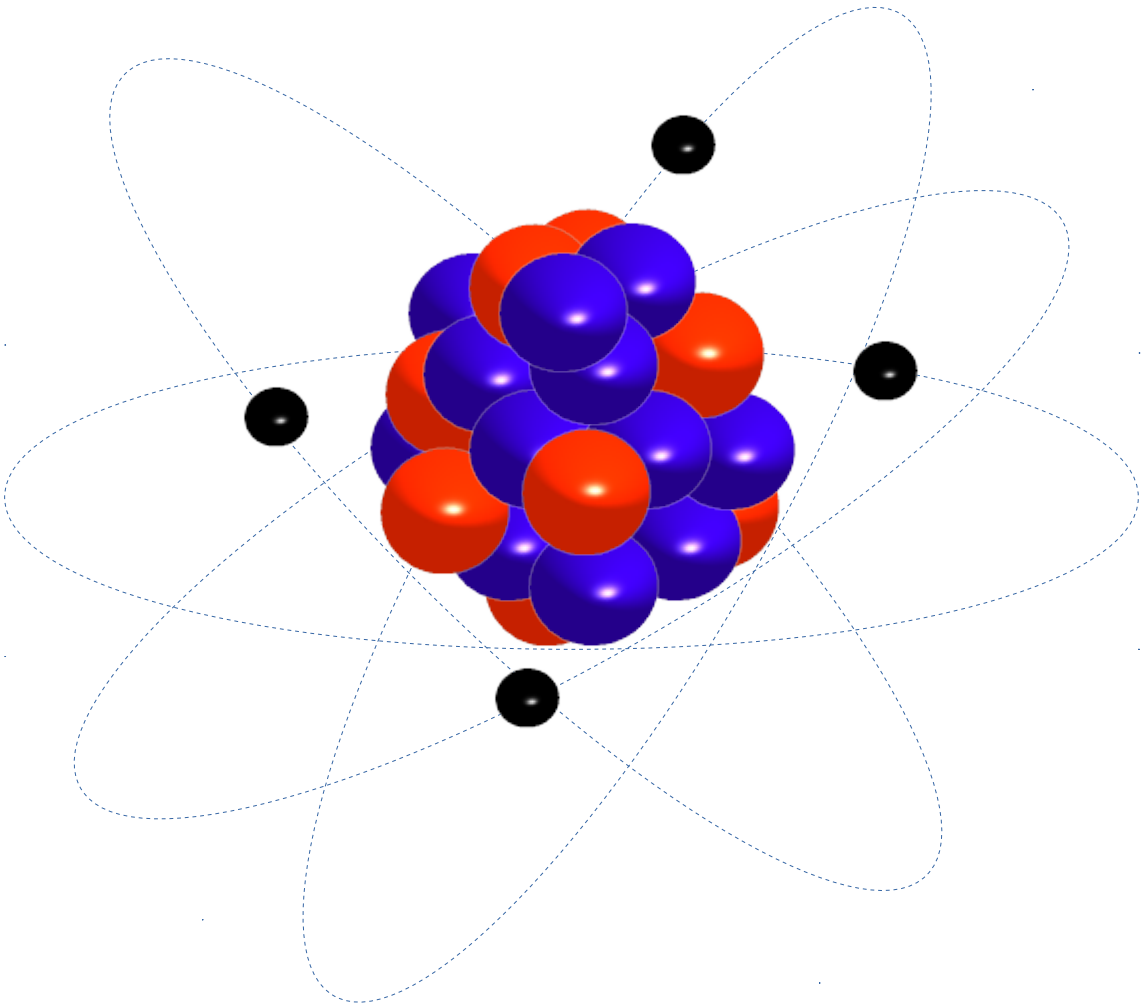

$$^{A}_{Z}X + e^{-} \rightarrow ^{A}_{Z-1}Y^{\star} + \nu$$

The excited atomic shell of daughter nucleus deexcites via X-rays, Auger electrons and/or Coster–Kronig transitions.

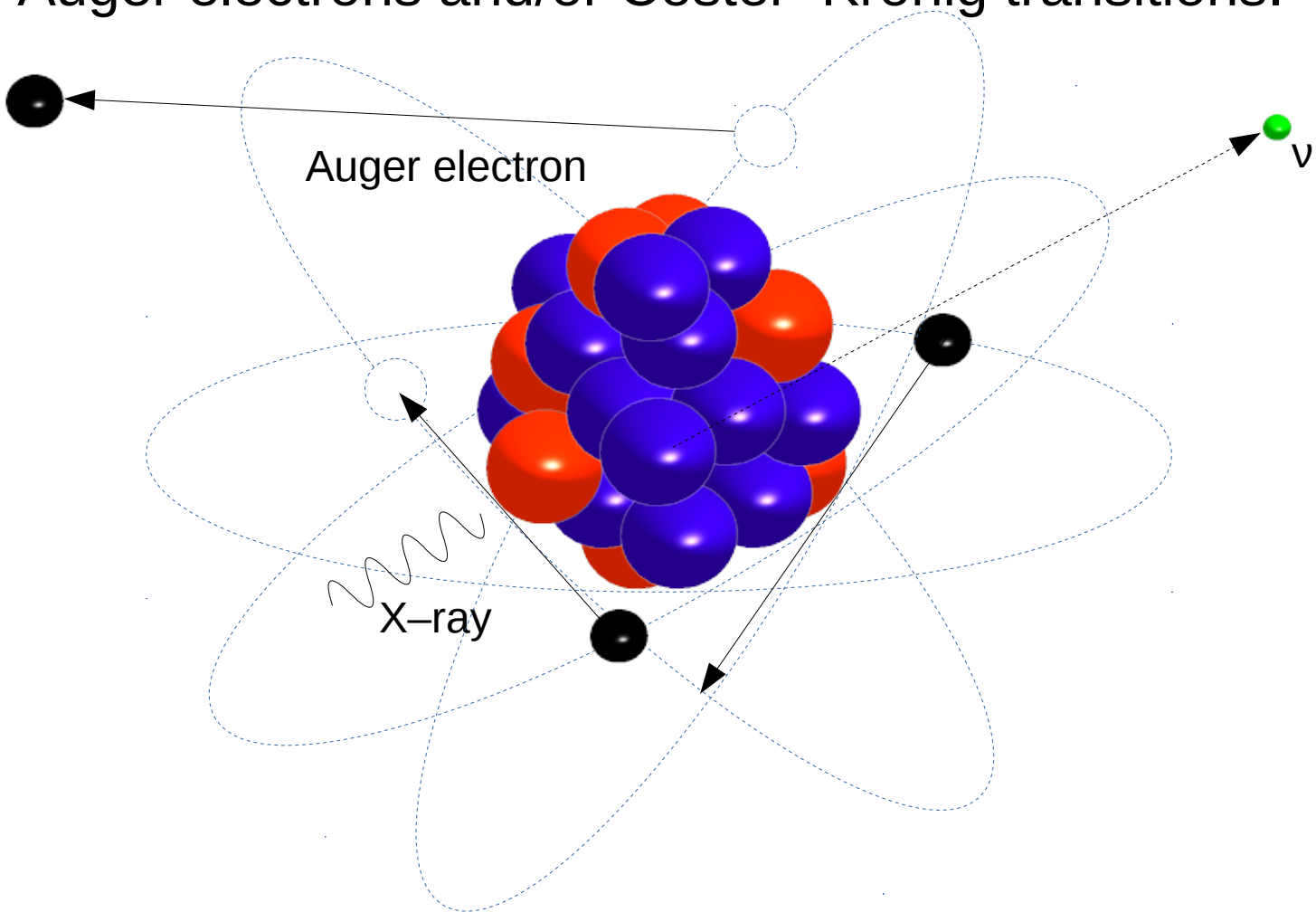

$$^{A}_{Z}X + e^{-} \rightarrow ^{A}_{Z-1}Y^{\star} + \nu$$

The excited atomic shell of daughter nucleus deexcites via X-rays, Auger electrons and/or Coster–Kronig transitions. The energy release can be measured calorimetrically.

$$\frac{dN}{dE} = A\,(Q_{EC} - E)^2 \sqrt{1 - \frac{m_\nu^2}{(Q_{EC}-E)^2}} \sum_H B_H \phi_H^2(0) \frac{\frac{\Gamma_H}{2\pi}}{(E-E_H)^2 + \frac{\Gamma_H^2}{4}}$$

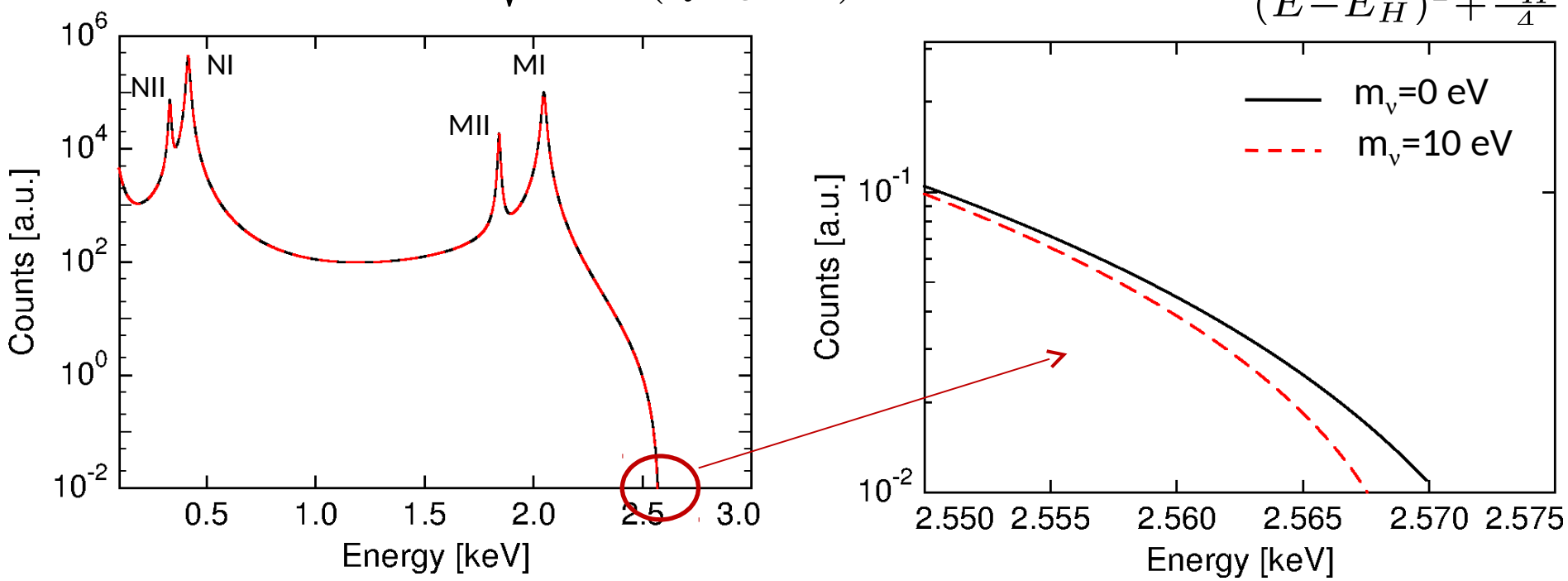

^{163}Ho Electron Capture

$$^{163}_{63}Ho + e^-(M,N,O) \rightarrow ^{163}_{62}Dy^\star + \nu$$

Halflife of $\tau_{1/2}$ = 4570 a, lowest known Q_{EC} of 2.555(16) keV

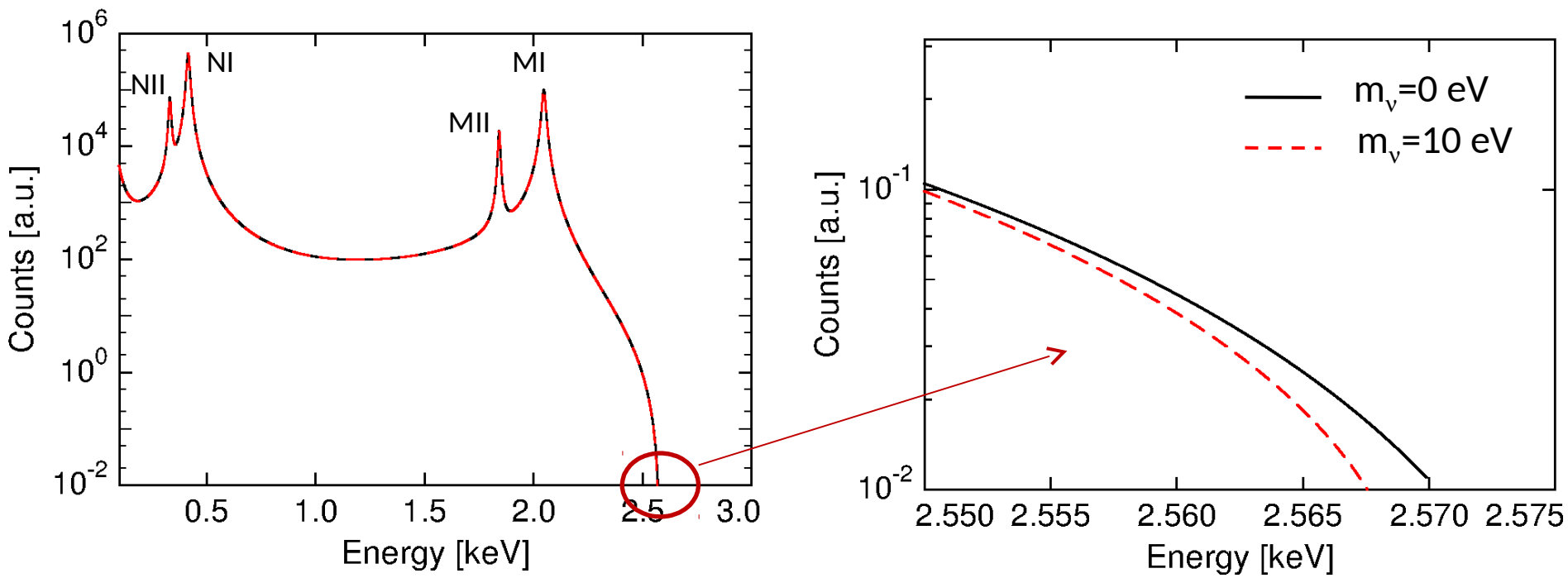

^{163}Ho Electron Capture

$$^{163}_{63}Ho + e^-(M,N,O) \rightarrow ^{163}_{62}Dy^\star + \nu$$

Halflife of $\tau_{1/2}$ = 4570 a, lowest known Q_{EC} of 2.555(16) keV

Large count rate in the endpoint region.

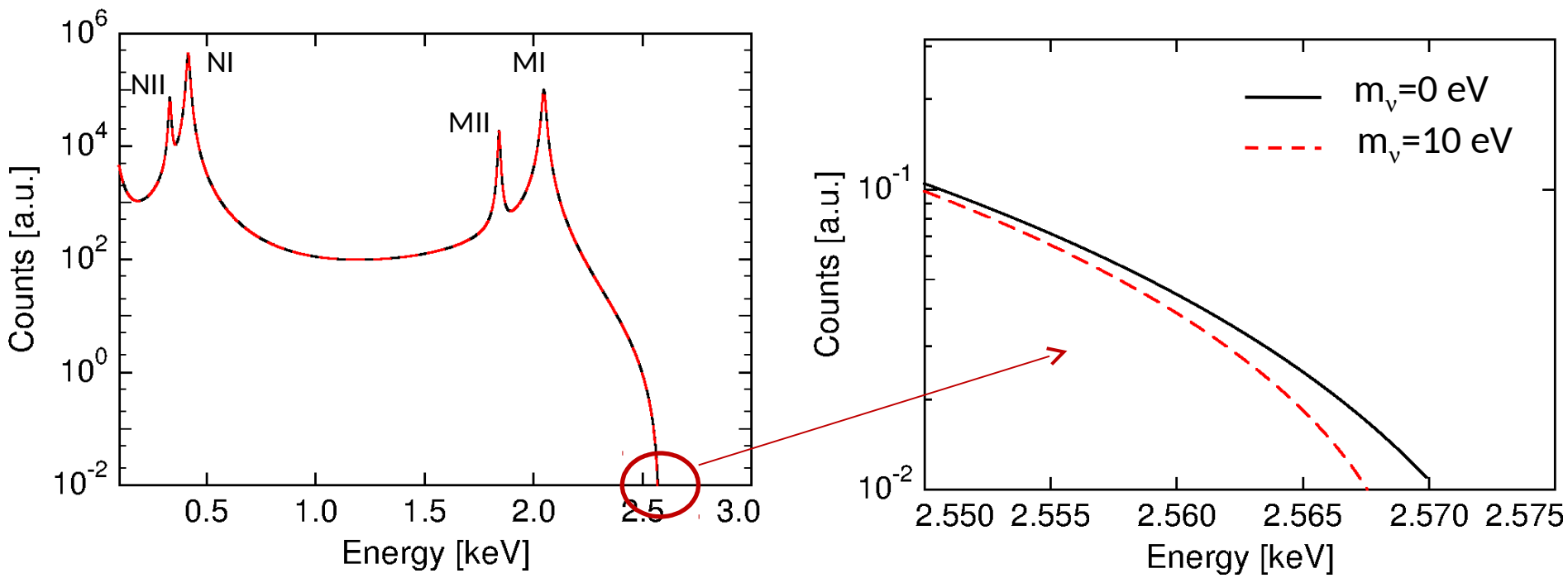

Measurements of the Spectrum

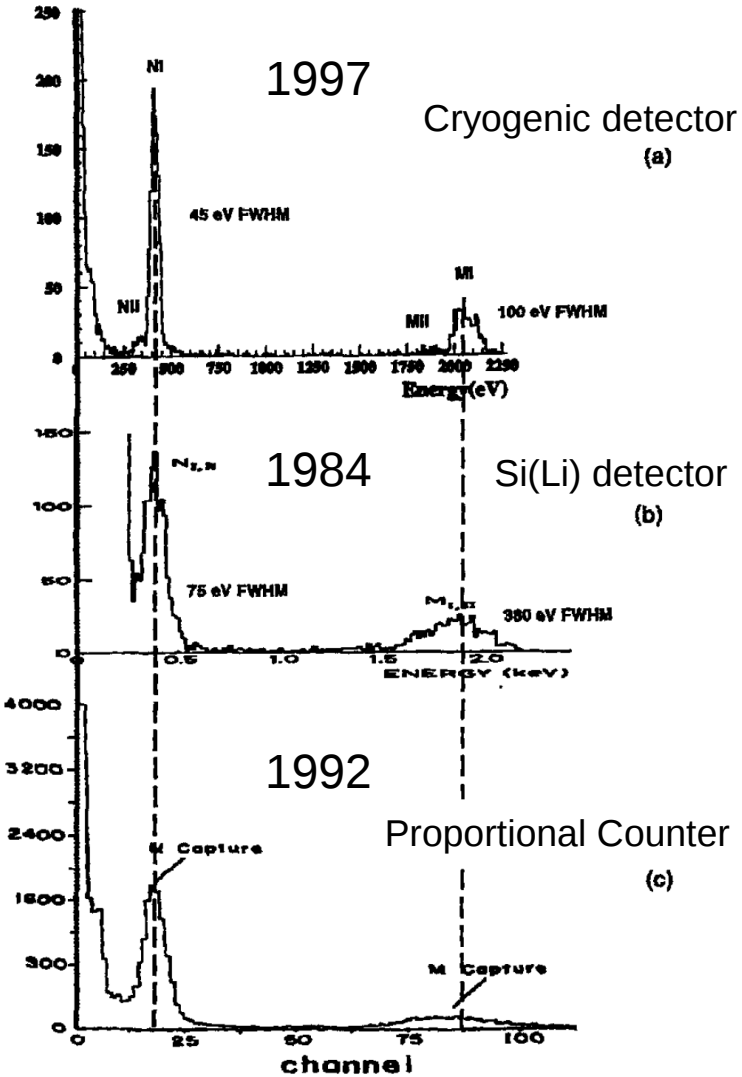

(a) F. Gatti et al., Physics Letters B 398 (1997) 415-419
(b) E. Laesgaard et al., Proc. of AMCO-7, (1984).
(c) F.X. Hartmann and R.A. Naumann, Nucl. Instr. Meth. A 3 13 (1992) 237.

Measurements of the Spectrum

European Physics Society Conference on High Energy Physics, Vienna, July, 24th 2015

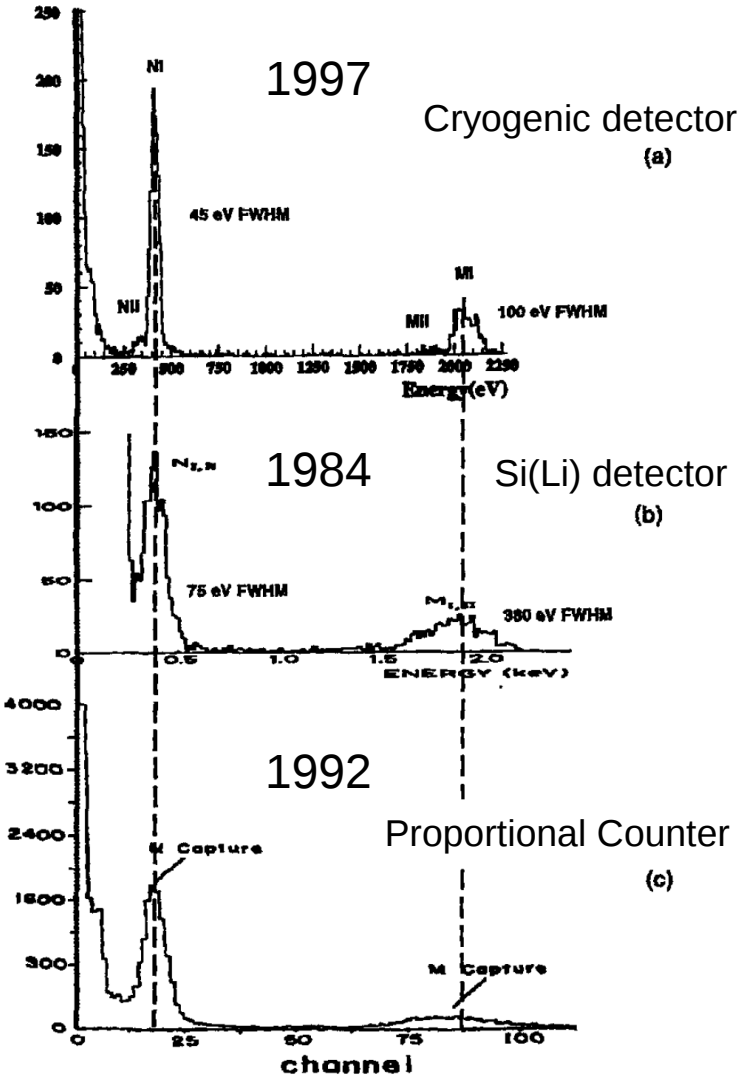

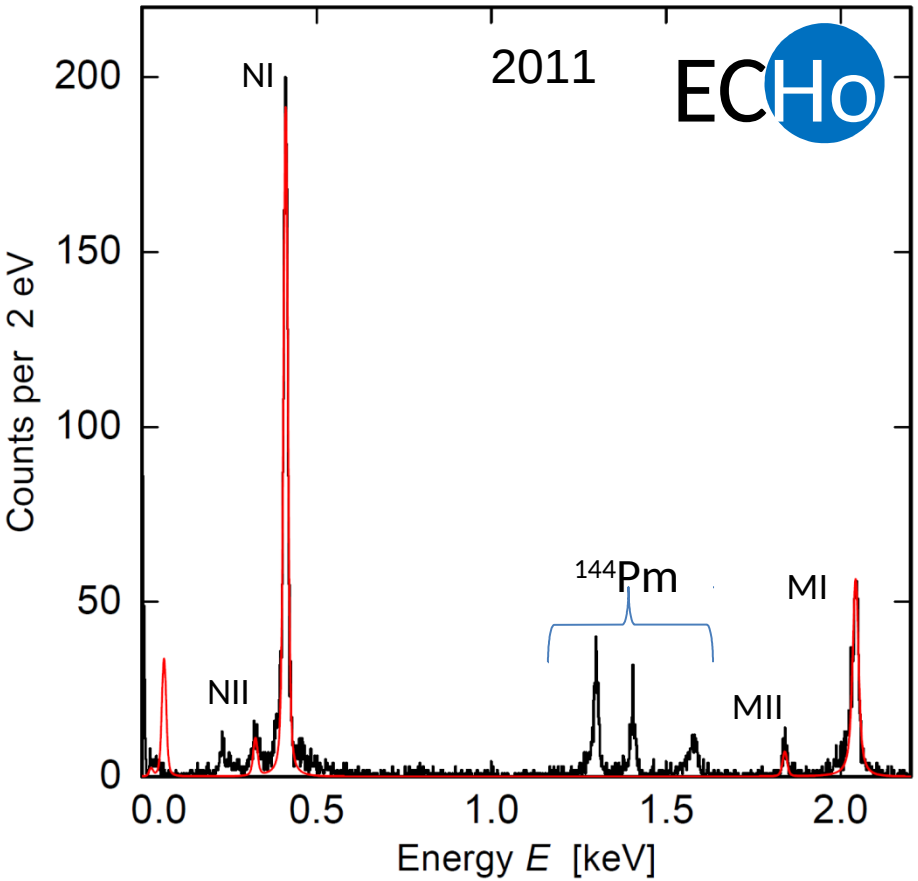

P. C.-O. Ranitzsch et al., J. Low Temp. Phys. 167, 1004 (2012)

(a) F. Gatti et al., Physics Letters B 398 (1997) 415-419
(b) E. Laesgaard et al., Proc. of AMCO-7, (1984).
(c) F.X. Hartmann and R.A. Naumann, Nucl. Instr. Meth. A 3 13 (1992) 237

Principles of Calorimetric Measurement

Example:

Metallic Magnetic Calorimeter

$$\Delta T = \frac{\Delta E}{C}$$

$$\Delta \Phi \propto \frac{\partial M}{\partial T} \Delta T$$

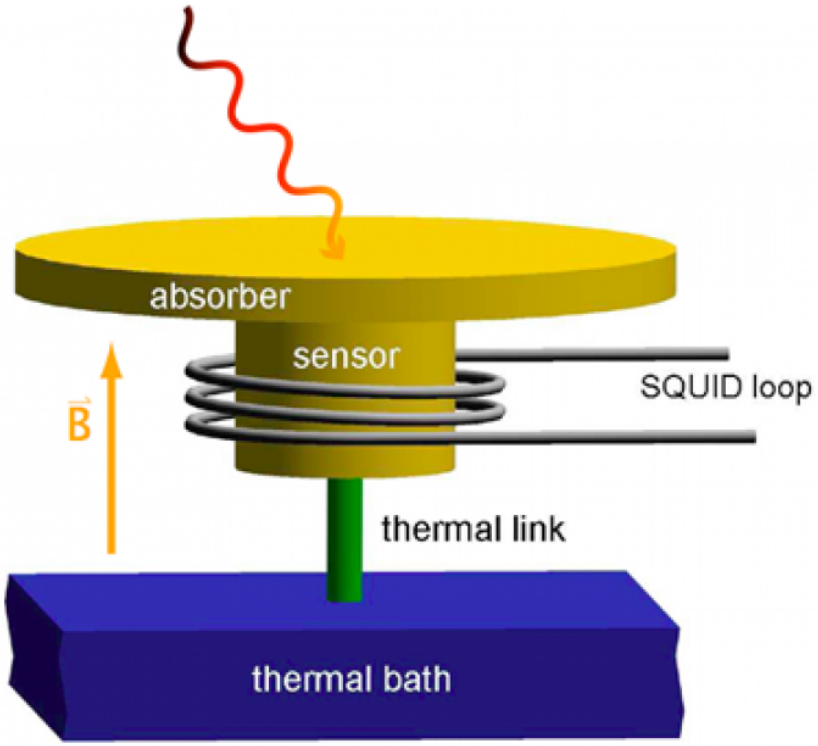

Principles of Calorimetric Measurement

Example:

Metallic Magnetic Calorimeter

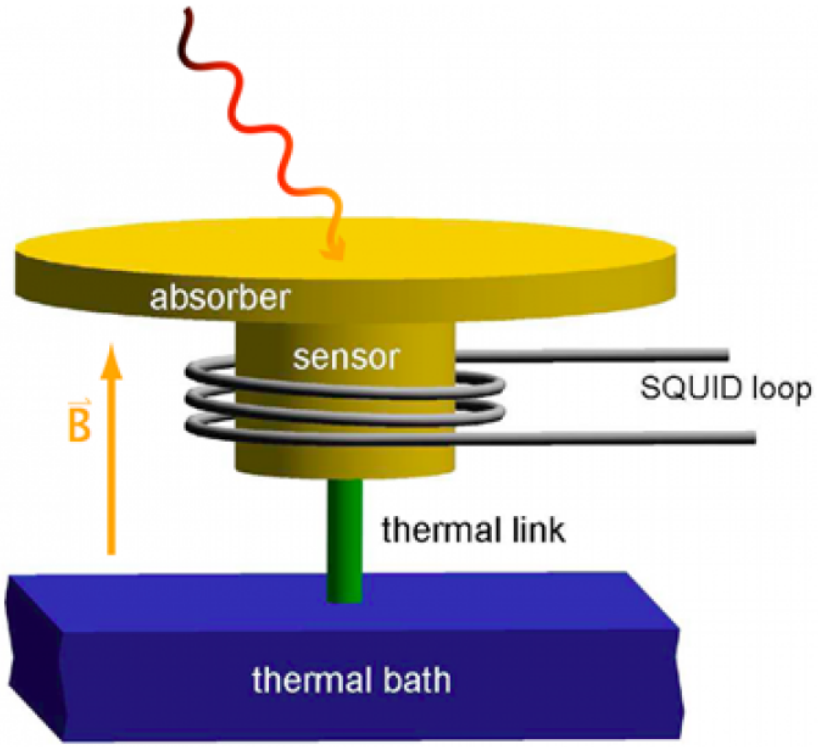

$$\Delta T = \frac{\Delta E}{C}$$

$$\Delta \Phi \propto \frac{\partial M}{\partial T} \Delta T$$

fast coupling phonon–spin

Direct SQUID readout of the change in magnetic flux

^{163}Ho Experiments

ECHo	HOLMES	NuMECS
Au:Er Metallic magnetic microcalorimeters (MMC)	MoCu or MoAu Transition edge sensors (TES)	MoCu Transition edge sensors (TES)
n irradiation Er(n,γ)	n irradiation Er(n,γ)	proton irradiation Dy(p,xn)

^{163}Ho Experiments

ECHo	HOLMES	NuMECS
Au:Er Metallic magnetic microcalorimeters (MMC)	MoCu or MoAu Transition edge sensors (TES)	MoCu Transition edge sensors (TES)
n irradiation Er(n,γ)	n irradiation Er(n,γ)	proton irradiation Dy(p,xn)
funding for ECHO–1k demonstrator granted by DFG	funding approved	

ECHo	HOLMES	NuMECS
Au:Er Metallic magnetic microcalorimeters (MMC)	MoCu or MoAu Transition edge sensors (TES)	MoCu Transition edge sensors (TES)
n irradiation Er(n,γ)	n irradiation Er(n,γ)	proton irradiation Dy(p,xn)
funding for ECHO-1k demonstrator granted by DFG	funding approved	

Common Goal: Measure m_ν with sub eV sensitivity

Goal of ECHo–1k:

- Total activity of 1kBq for 10^{11} events ^{163}Ho.
- Sensitivity < 10 eV for m_ν.
- Scalebility for A = 1MBq and 1eV sensitivity.

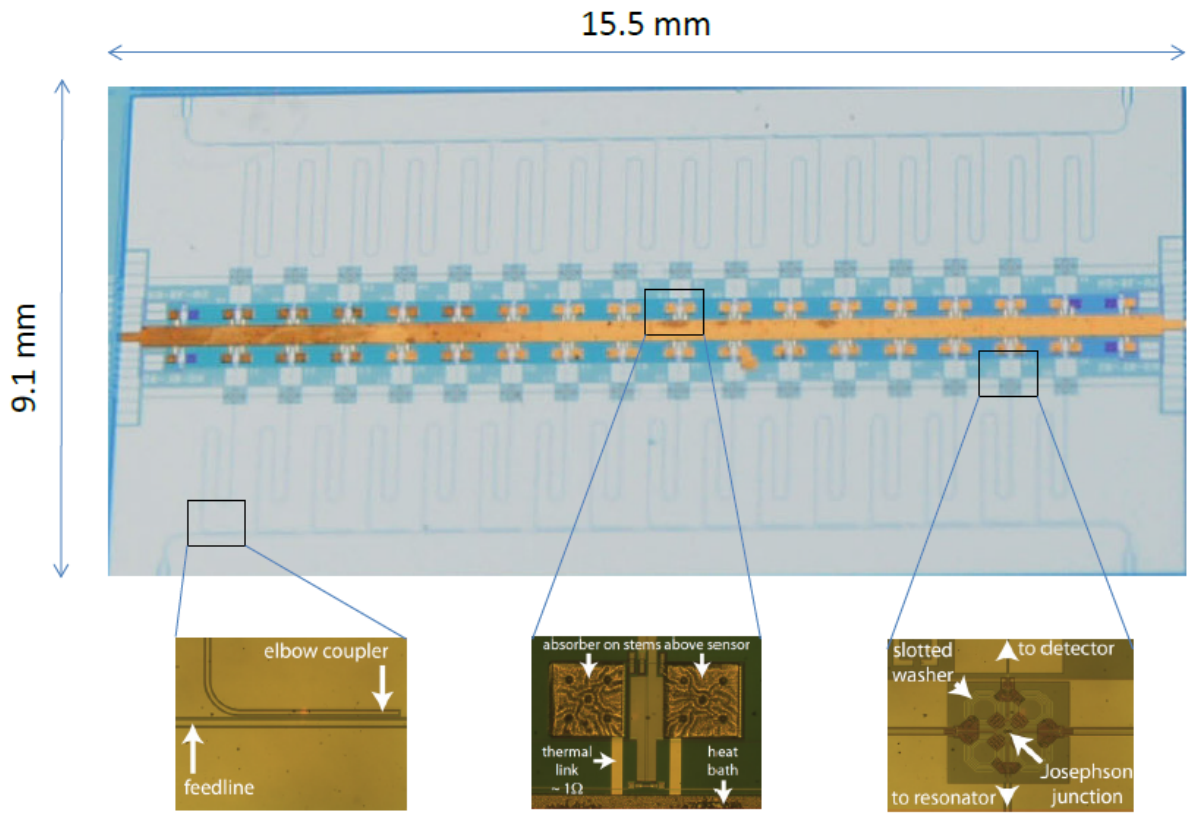

Elbow coupler MMC rf-SQUID

Goal of ECHo–1k:

- Total activity of 1kBq for 10^{11} events ^{163}Ho.
- Sensitivity < 10 eV for m_ν.
- Scalebility for A = 1MBq and 1eV sensitivity.

Parameters:

2 chips x64 pixels x 10 Bq ^{163}Ho

dedicated cryostat

MMCs with ΔE = 2 eV

τ_r = 0.1 µs

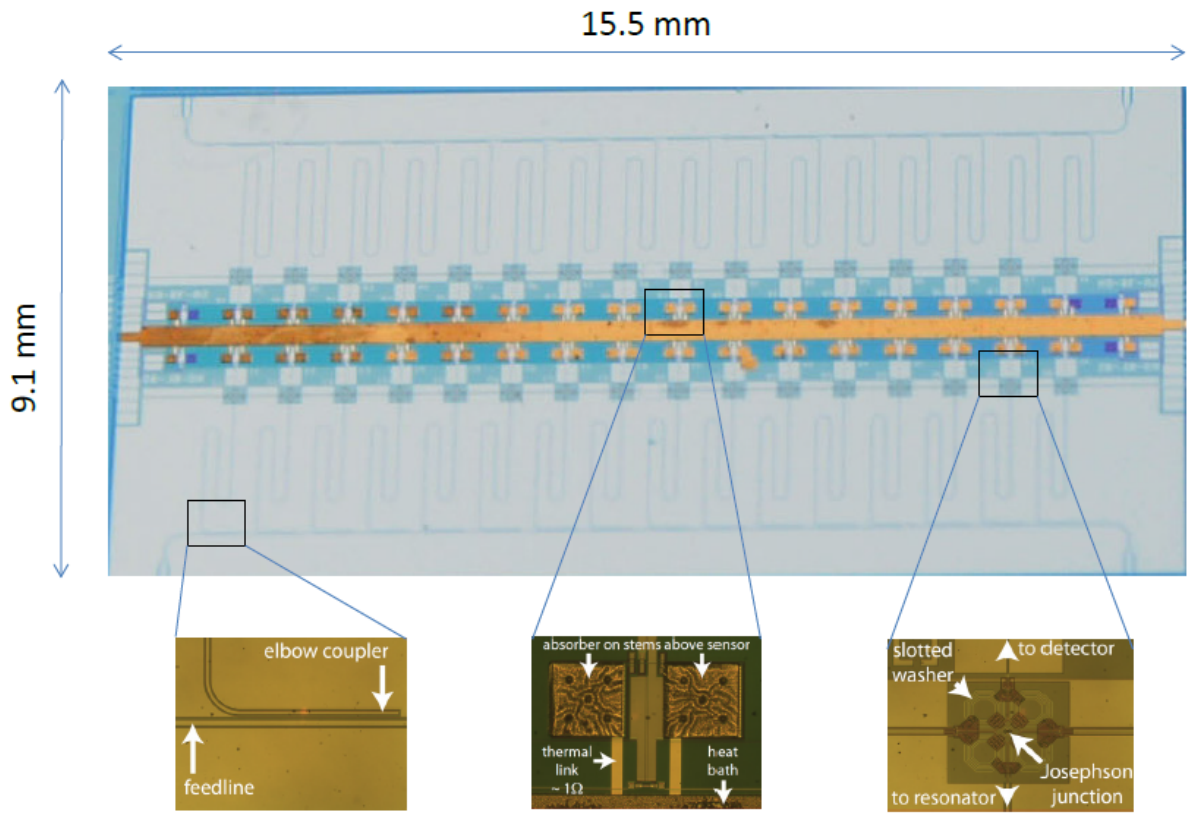

Elbow coupler MMC rf-SQUID

Detector Performance

Rise Time τ_r ~ 130 ns

ΔE_{FWHM} = 4.7 eV @ 6 keV

Non-Linearity < 1% @ 6keV

Presently most precise ^{163}Ho spectrum

New implanted detector free of ^{144}Pm is currently operated

	E_H lit.	E_H exp.	Γ_H lit.	Γ_H exp
MI	2.047	2.040	13.2	13.7
MII	1.845	1.836	6.0	7.2
NI	0.420	0.411	5.4	5.3
NII	0.340	0.333	5.3	8.0
OI	0.050	0.048	5.0	4.3

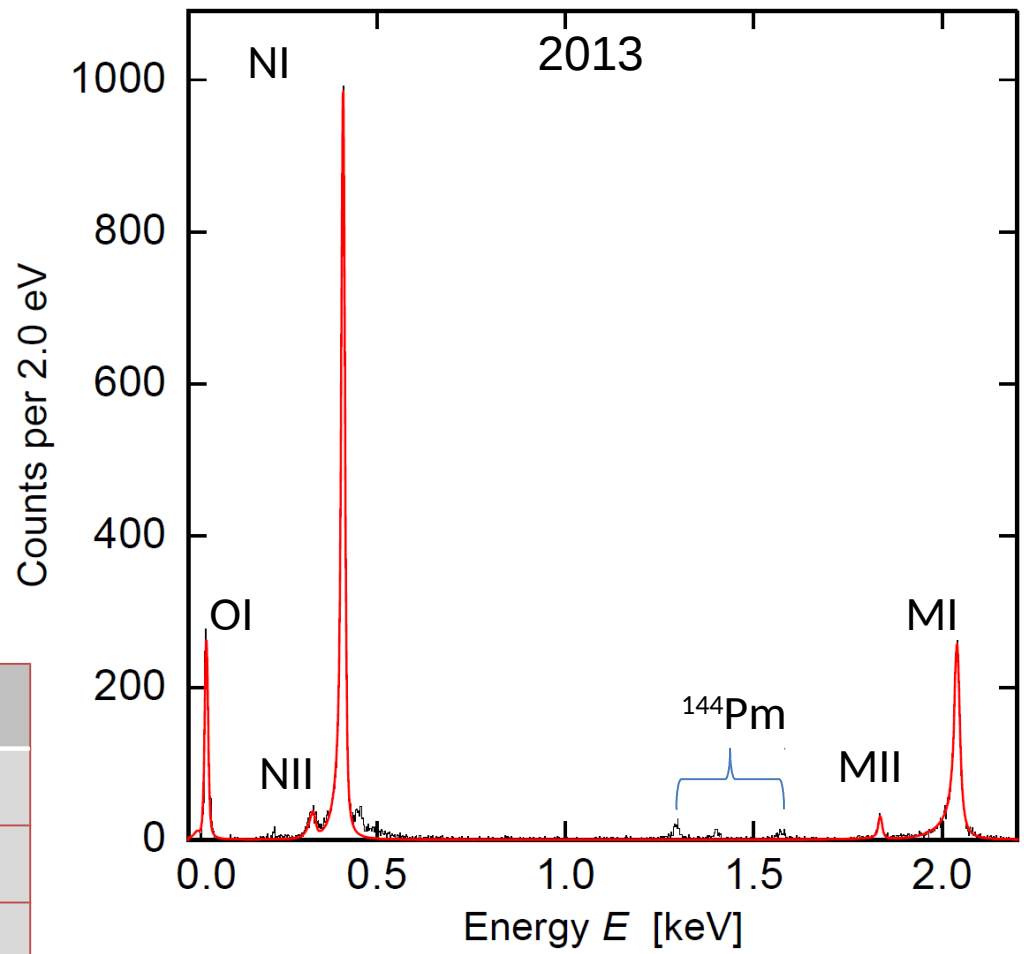

P. C.-O. Ranitzsch et al., J. Low Temp. Phys. 167, 1004 (2012)
L. Gastaldo et al., Nucl. Inst. Meth. A, 711, 150-159 (2013)

Measuring the Q-value of the EC

The value of Q_{EC} is going to be measured with Penning trap mass spectroscopy.

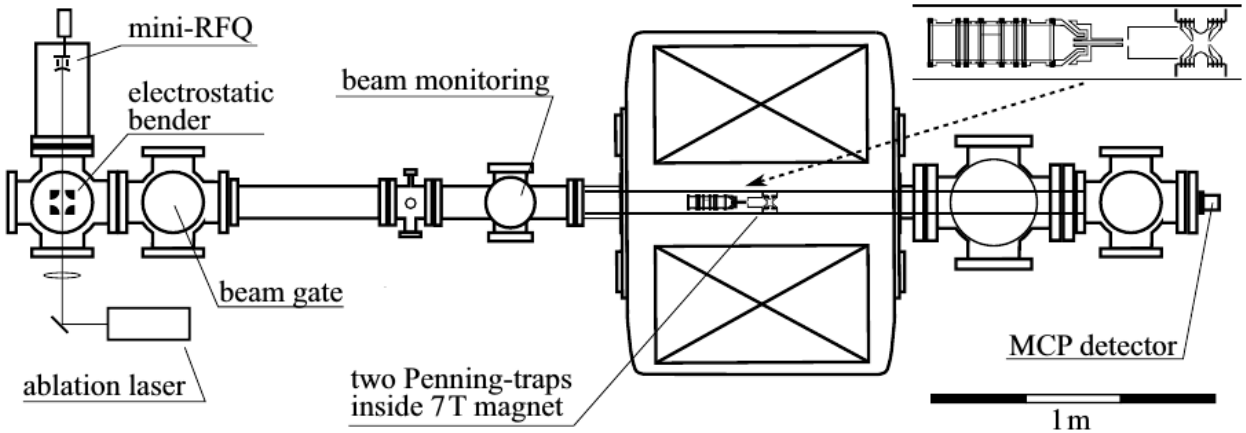

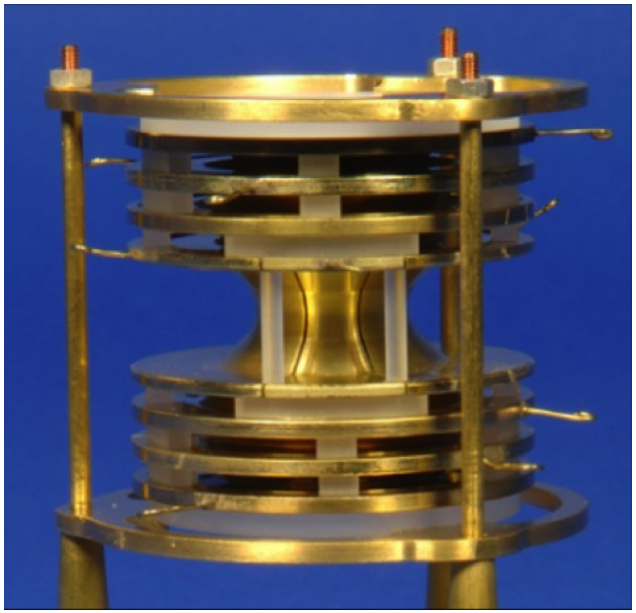

Measuring the Q-value of the EC

The value of Q_{EC} is going to be measured with Penning trap mass spectroscopy.

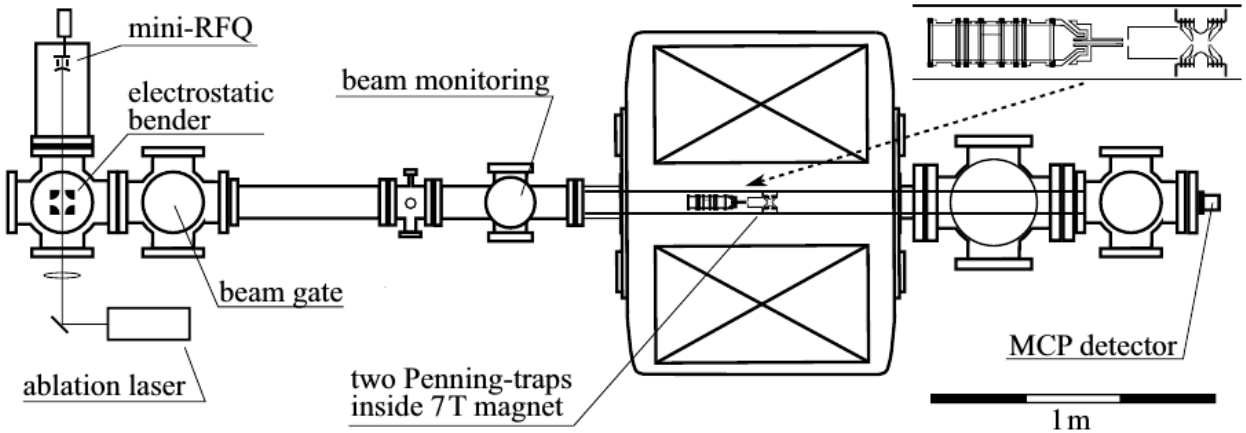

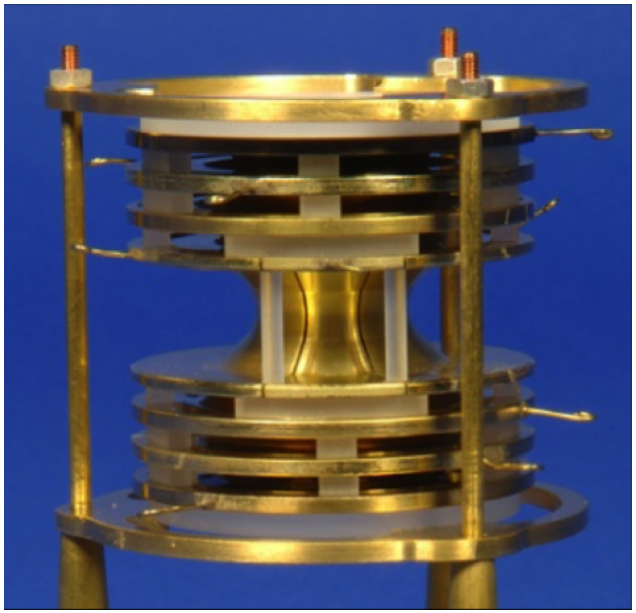

The reliable extraction of ^{163}Ho ions from small samples (10^{-15} atoms) has been shown with TRIGATRAP. A value of Q_{EC} = 2.5(7) keV has been measured.

Schneider *et al.*, Eur. Phys. J. A (2015) 51:89

Measuring the Q-value of the EC

The value of Q_{EC} is going to be measured with Penning trap mass spectroscopy.

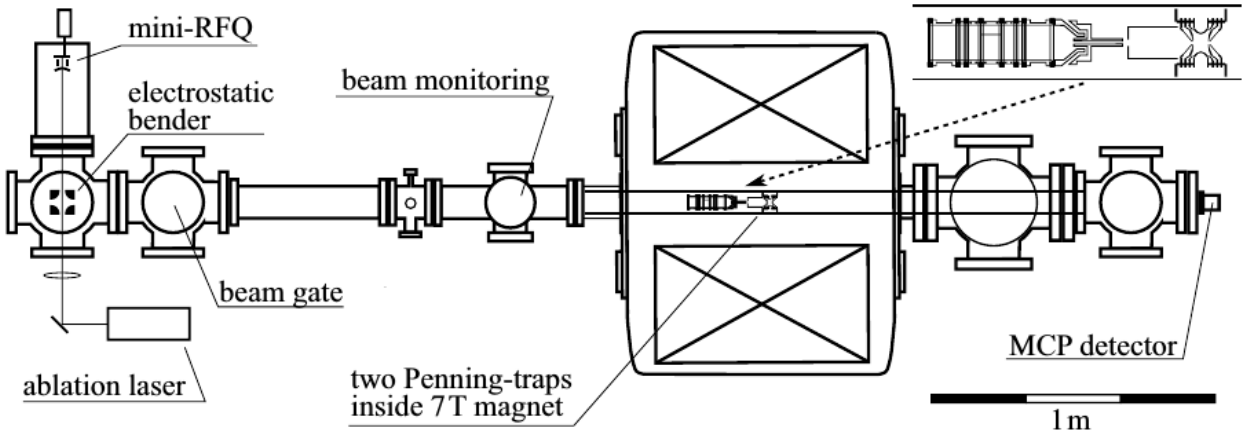

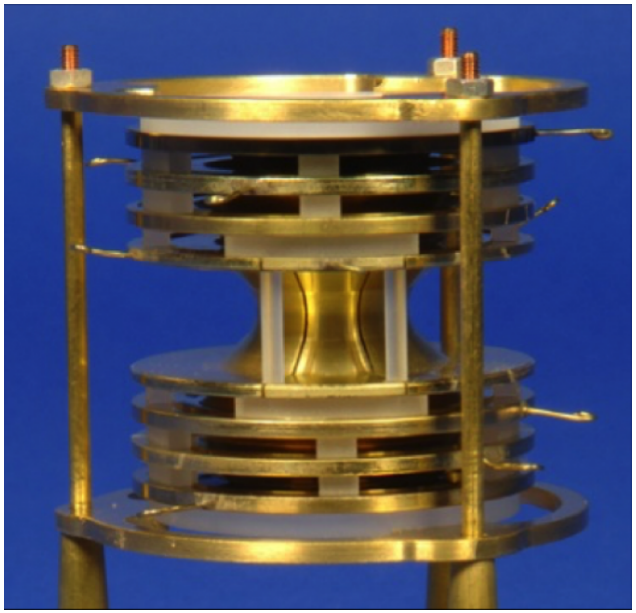

The reliable extraction of ^{163}Ho ions from small samples (10^{-15} atoms) has been shown with TRIGATRAP. A value of Q_{EC} = 2.5(7) keV has been measured.

Schneider *et al.*, Eur. Phys. J. A (2015) 51:89

The ion source combined with the PI-ICR technique is going to be used in SHIPTRAP next year, the sensitivity is expected to be increased by more an order of magnitude.

Outlook

The ECHo– 1k demonstrator phase is funded since March 2015

A new detector has been loaded with clean ^{163}Ho.

The detector is currently operated.

No traces of ^{166m}Ho have been detected so far.

The ion source for SHIPTRAP has been tested.

In 3 years, expect ^{163}Ho spectrum with 10^{11} counts giving a sensitivity of m_ν 10 eV.