ALFA

A luminosity detector for ATLAS

Dennis Petschull
On behalf of the ATLAS collaboration

Deutsches Elektronen-Synchrotron
Hamburg

LISHEP 2009, Rio de Janeiro

Outline

1. Introduction & motivation
   - Luminosity and measurement
   - Beam condition requirements and strategy
2. ALFA
   - Roman Pots and fibre tracker
   - Electronics and mechanics
   - Testbeam setup and activities
   - Testbeam analysis results (preliminary)
3. Schedule & conclusion

Major contributors to ALFA

CERN
design
mechanics
detectors
electronics
coordination
installation

Orsay
MAROC 1/2/3
FPGAs

Lisbon
fiber coating

Lund
motherboard

DESY HH
fiber metrology
MAPMTs, HV

HU Berlin
TI-substrates

DESY Z
triggers

Giessen
fibre detectors
assembly
software

Prague
mechanics
software

Luminosity

Luminosity

- Proportionality factor between number of interactions per second and cross-section

$$\Rightarrow \frac{dN}{dt} = L \cdot \sigma$$

- Characterizes accelerator performance

Luminosity

Luminosity

- Proportionality factor between number of interactions per second and cross-section

$\Rightarrow \frac{dN}{dt} = L \cdot \sigma$

- Characterizes accelerator performance

Luminosity - impact on accuracy (example)

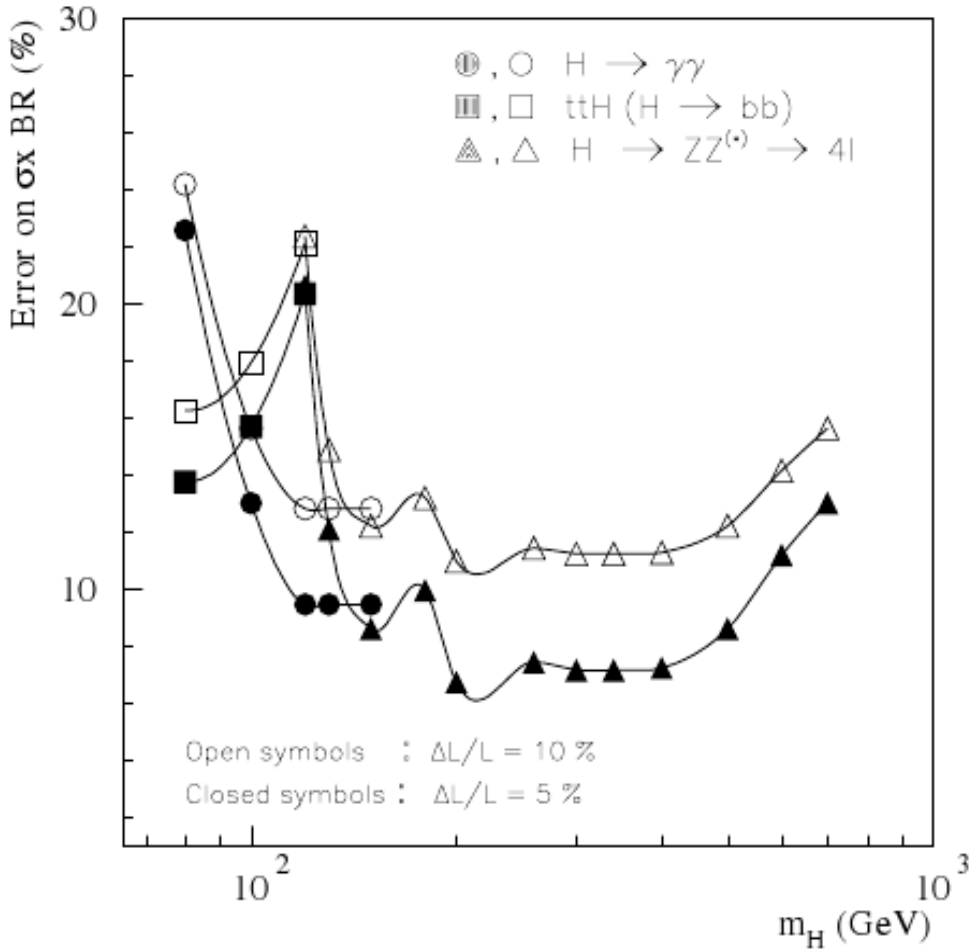

Relative precision on the measurement of $\sigma_H \cdot BR$ for various channels as a function of m_H at $\int L = 300\,\mathrm{fb}^{-1}$
The luminosity is assumed to be known to 10 % (open symbols) or 5 % (closed symbols).

Accuracy on luminosity clearly dominates systematic errors

Luminosity measurements

Methods to measure the luminosity at LHC

- Machine parameters:

  $L = f \cdot n \frac{N_1 N_2}{4\pi\sigma_r^2}$, with frequency f, number of bunches n, particle densities N_i and beam profile σ_r

  Error on luminosity: $\sim$ 25% during startup phase (might be reduced to 5% over time)

- Well known processes:

  $\frac{dN}{dt} = L \cdot \sigma$

  $\Rightarrow$ well known cross-section (like muon pair production) but small production rates; high production rates (like W-/Z-production) but large cross-section uncertainties ($\sim$ 5%)

- Elastic scattering at small angles:

  Method used at ALFA with a precision of 2-3% (see next slides)

Luminosity measurements

Methods to measure the luminosity at LHC

- Machine parameters:

  $L = f \cdot n \frac{N_1 N_2}{4\pi\sigma_r^2}$, with frequency f, number of bunches n, particle densities N_i and beam profile σ_r

  Error on luminosity: $\sim$ 25% during startup phase (might be reduced to 5% over time)

- Well known processes:

  $\frac{dN}{dt} = L \cdot \sigma$

  $\Rightarrow$ well known cross-section (like muon pair production) but small production rates; high production rates (like W-/Z-production) but large cross-section uncertainties ($\sim$ 5%)

- Elastic scattering at small angles:

  Method used at ALFA with a precision of 2-3% (see next slides)

Luminosity measurements

Methods to measure the luminosity at LHC

- Machine parameters:

  $L = f \cdot n \frac{N_1 N_2}{4\pi\sigma_r^2}$, with frequency f, number of bunches n, particle densities N_i and beam profile σ_r

  Error on luminosity: $\sim$ 25% during startup phase (might be reduced to 5% over time)

- Well known processes:

  $\frac{dN}{dt} = L \cdot \sigma$

  $\Rightarrow$ well known cross-section (like muon pair production) but small production rates; high production rates (like W-/Z-production) but large cross-section uncertainties ($\sim$ 5%)

- Elastic scattering at small angles:

  Method used at ALFA with a precision of 2-3% (see next slides)

Luminosity measurements

Methods to measure the luminosity at LHC

- Machine parameters:

  $L = f \cdot n \frac{N_1 N_2}{4\pi\sigma_r^2}$, with frequency f, number of bunches n, particle densities N_i and beam profile σ_r

  Error on luminosity: $\sim$ 25% during startup phase (might be reduced to 5% over time)

- Well known processes:

  $\frac{dN}{dt} = L \cdot \sigma$

  $\Rightarrow$ well known cross-section (like muon pair production) but small production rates; high production rates (like W-/Z-production) but large cross-section uncertainties ($\sim$ 5%)

- Elastic scattering at small angles:

  Method used at ALFA with a precision of 2-3% (see next slides)

Elastic scattering at small angles in the CNI[1]-region

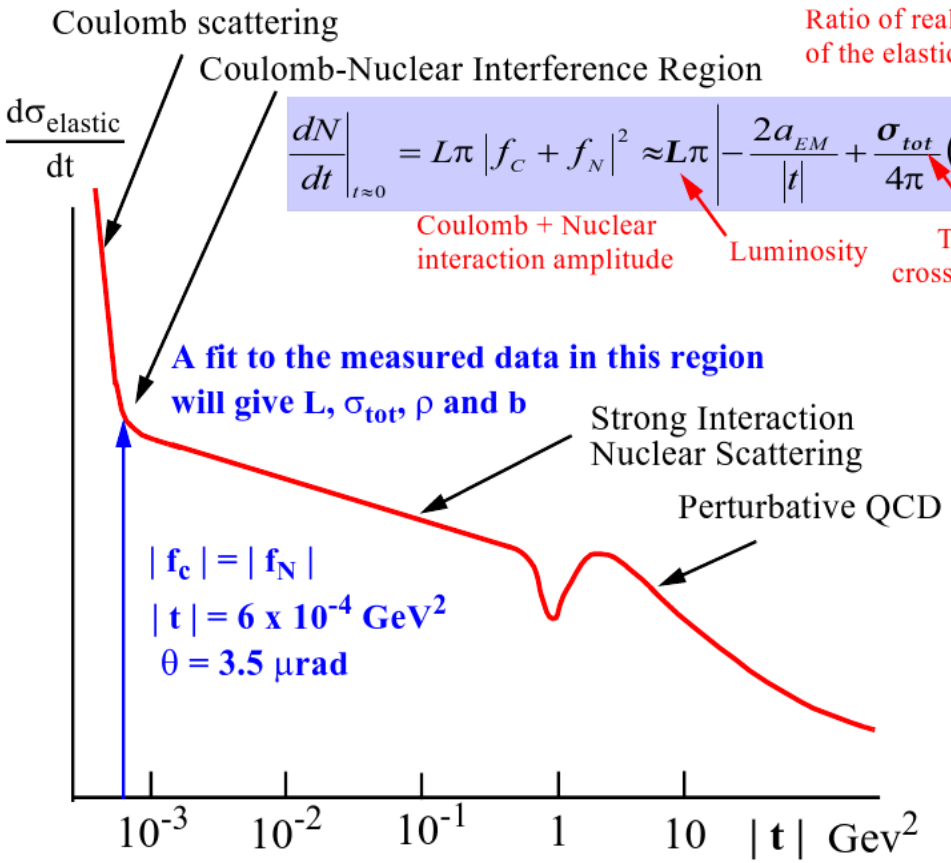

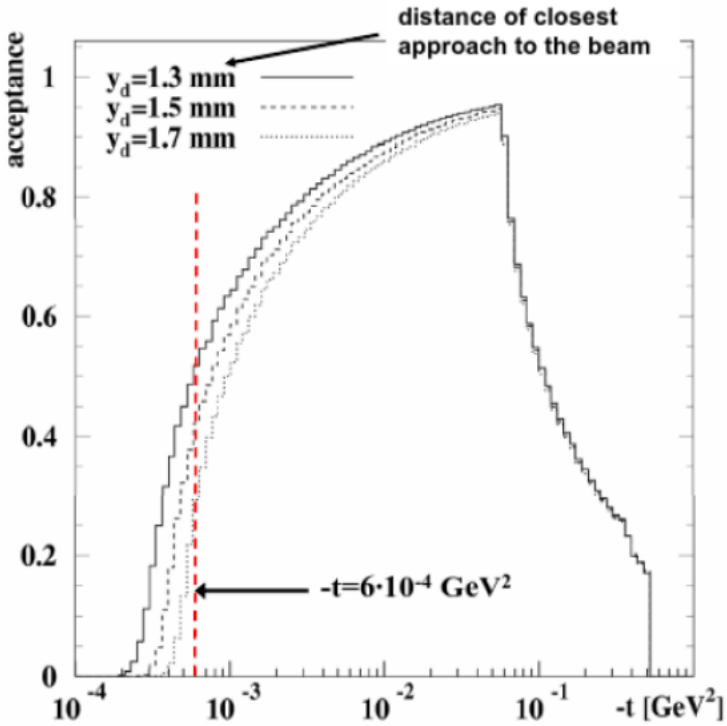

Special LHC optics is needed to reach the Coulomb region i.e. special dedicated LHC runs are required.

[1] Coulomb-Nuclear-Interference

Elastic scattering at small angles in the CNI[1]-region

Measuring in CNI-region:

- Interference region between nuclear, f_N, and Coulomb, f_C, interaction amplitudes
- At LHC energy of $\sqrt{s} = 14\,\text{TeV}$
  $\Rightarrow \quad -t_0 \simeq 6 \cdot 10^{-4}\,\text{GeV}^2 \quad \text{and} \quad \theta \simeq 3\,\mu rad$
  spatial resolution of ALFA: $\leq 30\,\mu\text{m}$
- In practice: Determine ρ, b and σ_{tot} from fit to measured data

[1] Coulomb-Nuclear-Interference

Elastic scattering at small angles in the CNI[1]-region

Measuring in CNI-region:

- Interference region between nuclear, f_N, and Coulomb, f_C, interaction amplitudes
- At LHC energy of $\sqrt{s} = 14\,\text{TeV}$
  $\Rightarrow \quad -t_0 \simeq 6 \cdot 10^{-4}\,\text{GeV}^2 \quad \text{and} \quad \theta \simeq 3\,\mu rad$
  spatial resolution of ALFA: $\leq 30\,\mu\text{m}$
- In practice: Determine ρ, b and σ_{tot} from fit to measured data

[1] Coulomb-Nuclear-Interference

Elastic scattering at small angles in the CNI[1]-region

Measuring in CNI-region:

- Interference region between nuclear, f_N, and Coulomb, f_C, interaction amplitudes
- At LHC energy of $\sqrt{s} = 14\,\text{TeV}$
  $\Rightarrow \quad -t_0 \simeq 6 \cdot 10^{-4}\,\text{GeV}^2 \quad \text{and} \quad \theta \simeq 3\,\mu rad$
  spatial resolution of ALFA: $\leq 30\,\mu\text{m}$
- In practice: Determine ρ, b and σ_{tot} from fit to measured data

[1] Coulomb-Nuclear-Interference

The ALFA setup - Roman Pot Units at large distances

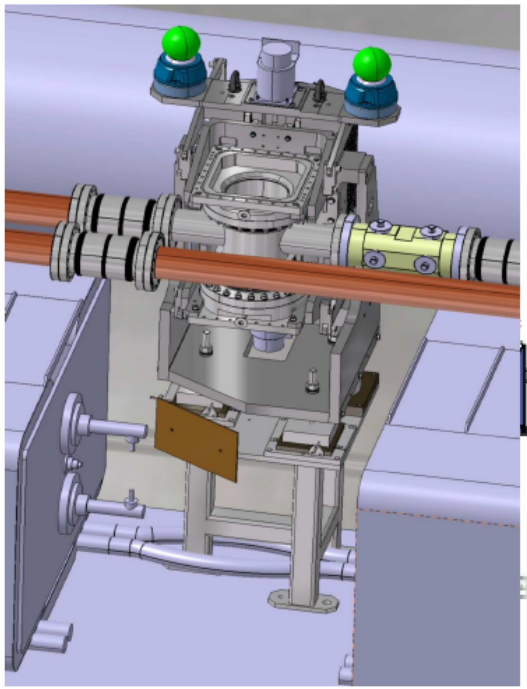

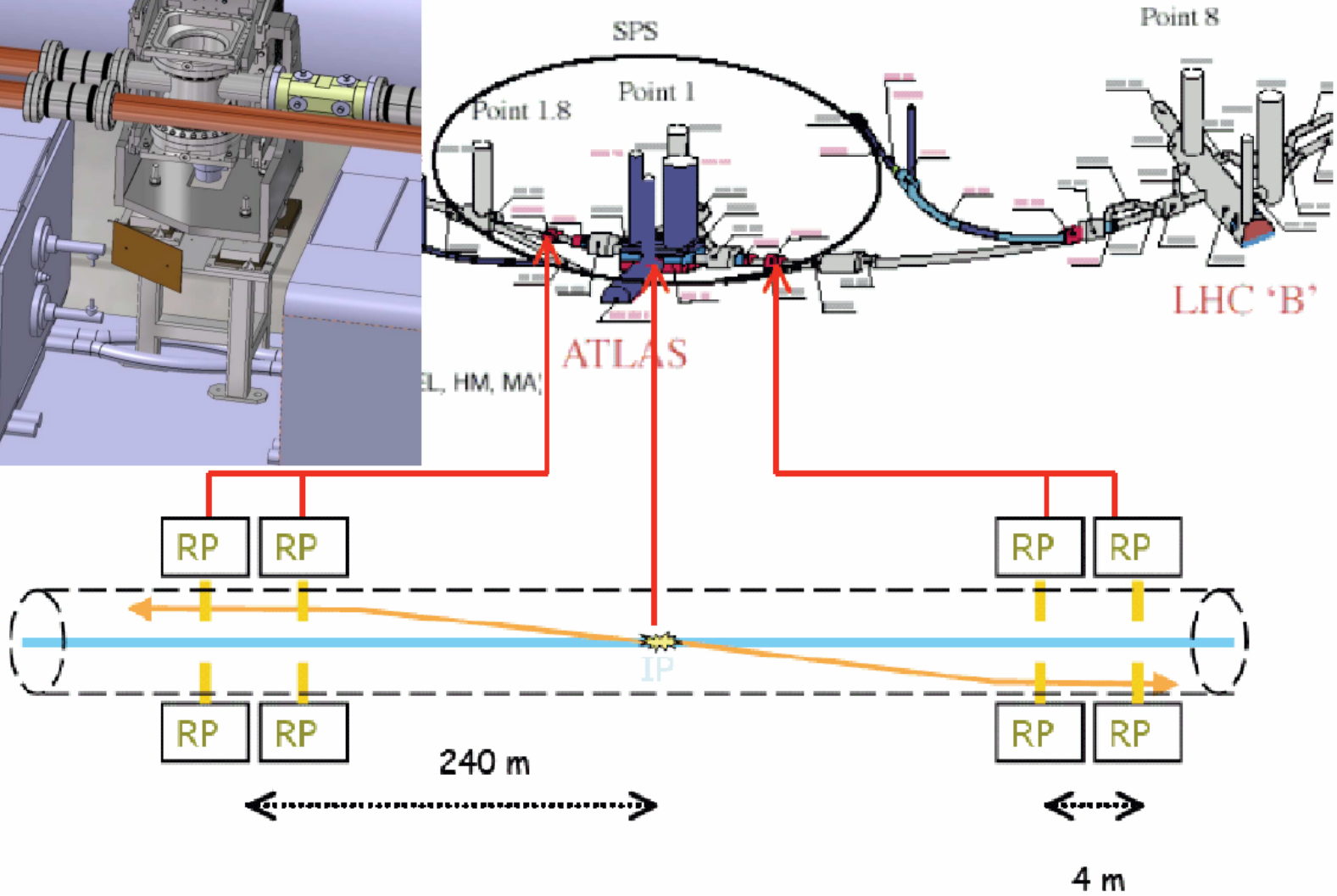

Special ALFA beam conditions

Special "high-beta" optics and low luminosity ($10^{27}\,\mathrm{cm}^{-2}\mathrm{s}^{-1}$) needed to reach $-t_0 \simeq 6 \cdot 10^{-4}\,\mathrm{GeV}^2$

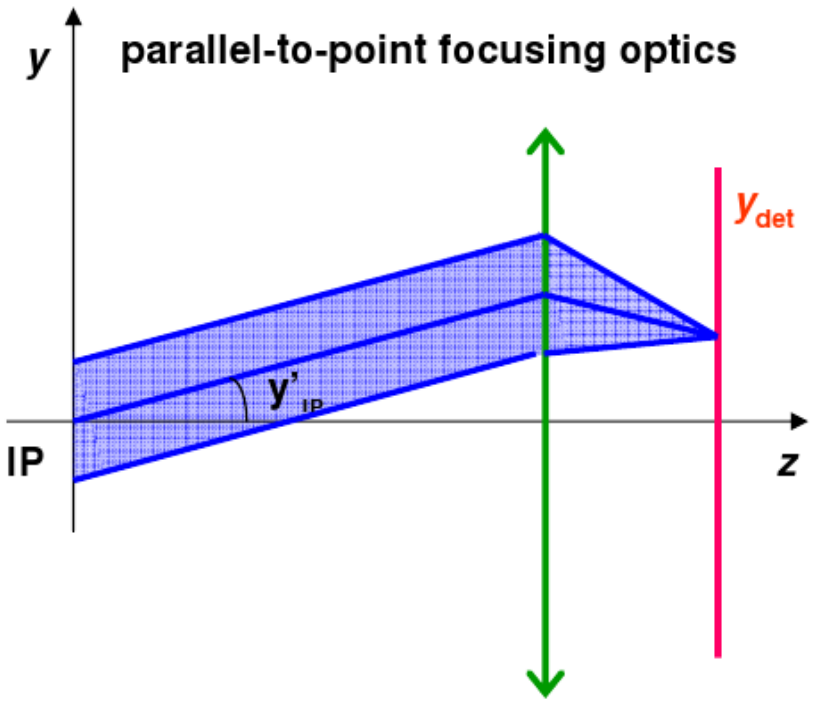

- Parallel-to-point focusing optics:
  - $y = \sqrt{\beta/\beta_{IP}}(\cos\psi + \alpha_{IP}\sin\psi)y_{IP} + \sqrt{\beta\beta_{IP}}\sin\psi \cdot y'_{IP}$
- Best solution: $\psi = \frac{\pi}{2}$ and $\alpha_{IP} = 0$
  - $\Rightarrow\ y = \sqrt{\beta\beta_{IP}}\ y_{IP}$
- For a normalized emittance of 1 μrad and a safety distance of 15 σ
  - $\Rightarrow\ \beta_{IP} \simeq 2600\,\mathrm{m}$

No LHC hardware changes needed, but one quadrupole operating with reversed polarity

Overall strategy for luminosity measurement

Strategy needed to ”transfer” absolute luminosity values from $10^{27}\,\mathrm{cm}^{-2}\mathrm{s}^{-1}$ during ALFA runs to $10^{32}\,\mathrm{cm}^{-2}\mathrm{s}^{-1}$ during normal ATLAS data-taking!

Overall strategy for luminosity measurement

Strategy needed to ”transfer” absolute luminosity values from $10^{27}\,\mathrm{cm}^{-2}\mathrm{s}^{-1}$ during ALFA runs to $10^{32}\,\mathrm{cm}^{-2}\mathrm{s}^{-1}$ during normal ATLAS data-taking!

LUCID

- Relative luminosity monitor needed that has a linear (or at least known) dependence with L
- LUCID Cherenkov counters allow to count 0, 1 or 2 particles per tube and bunch-crossing in the full lumi range
  - Below 10^{32}: No pile-up expected, thus linearity is not effected. Difference in LUCID acceptance between low- and high-lumi $\leq 1\%$
  - Above 10^{32}: Pile-up region, but $\geq 10^5$ W-/Z-bosons per fill to cross-check LUCID linearity

Overall strategy for luminosity measurement

Strategy needed to ”transfer” absolute luminosity values from $10^{27}\,\mathrm{cm}^{-2}\mathrm{s}^{-1}$ during ALFA runs to $10^{32}\,\mathrm{cm}^{-2}\mathrm{s}^{-1}$ during normal ATLAS data-taking!

During special ALFA runs:

- Measure absolute luminosity to 2-3% at ATLAS IP with ALFA
- Measure relative luminosity at ATLAS IP with LUCID
  - $\Rightarrow$ Calibrate LUCID with ALFA data

Overall strategy for luminosity measurement

Strategy needed to ”transfer” absolute luminosity values from $10^{27}\,\mathrm{cm}^{-2}\mathrm{s}^{-1}$ during ALFA runs to $10^{32}\,\mathrm{cm}^{-2}\mathrm{s}^{-1}$ during normal ATLAS data-taking!

During special ALFA runs:

- Measure absolute luminosity to 2-3% at ATLAS IP with ALFA
- Measure relative luminosity at ATLAS IP with LUCID
  - $\Rightarrow$ Calibrate LUCID with ALFA data

During ”normal” high-lumi ATLAS runs:

- Move ALFA completely out of beam
- Precisely measure absolute luminosity with LUCID

ATLAS forward detectors

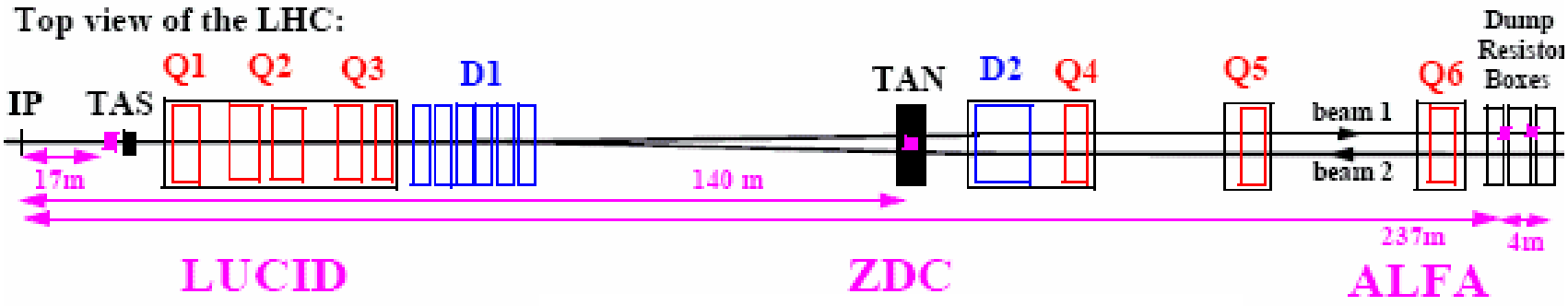

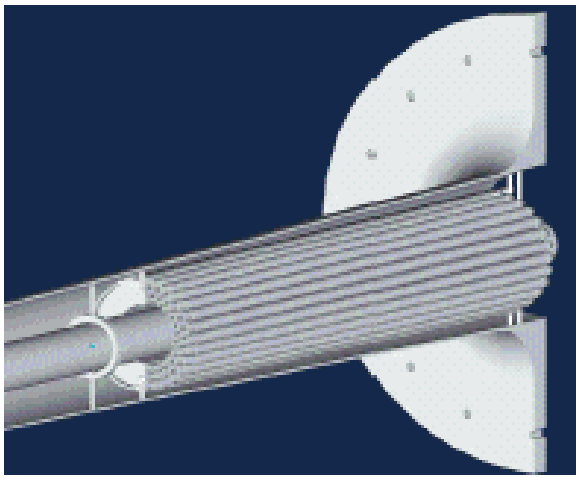

Cherenkov tubes

Relative luminosity monitoring.

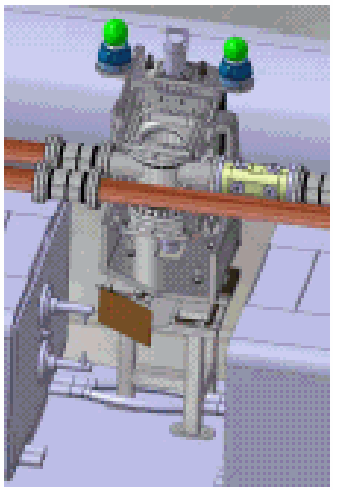

Scintillating fibres in Roman Pots

Absolute luminosity in dedicated LHC runs with

The Roman Pot concept

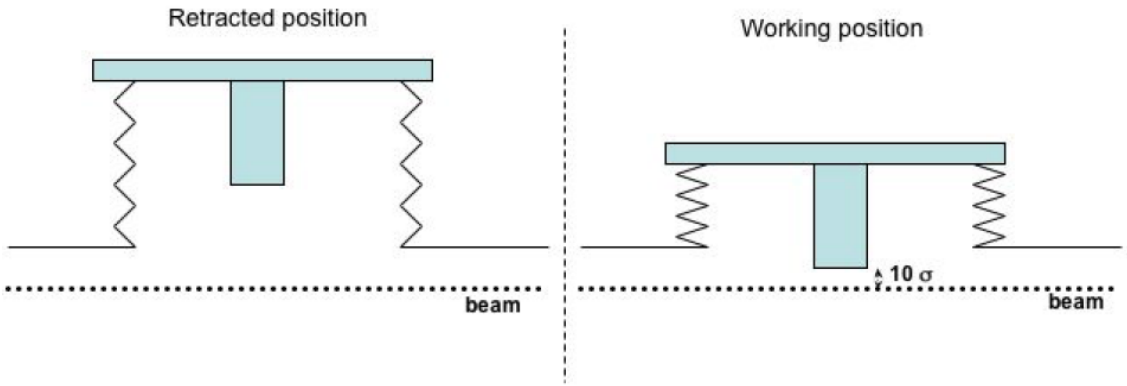

- Movable ”pot” housing detector and electronics
- Retracted from beam during normal LHC runs and unstable beam conditions
- Approaching beam during special ”high-beta” beam conditions
- Adjustable detector-beam-distance

The ALFA Roman Pot Units

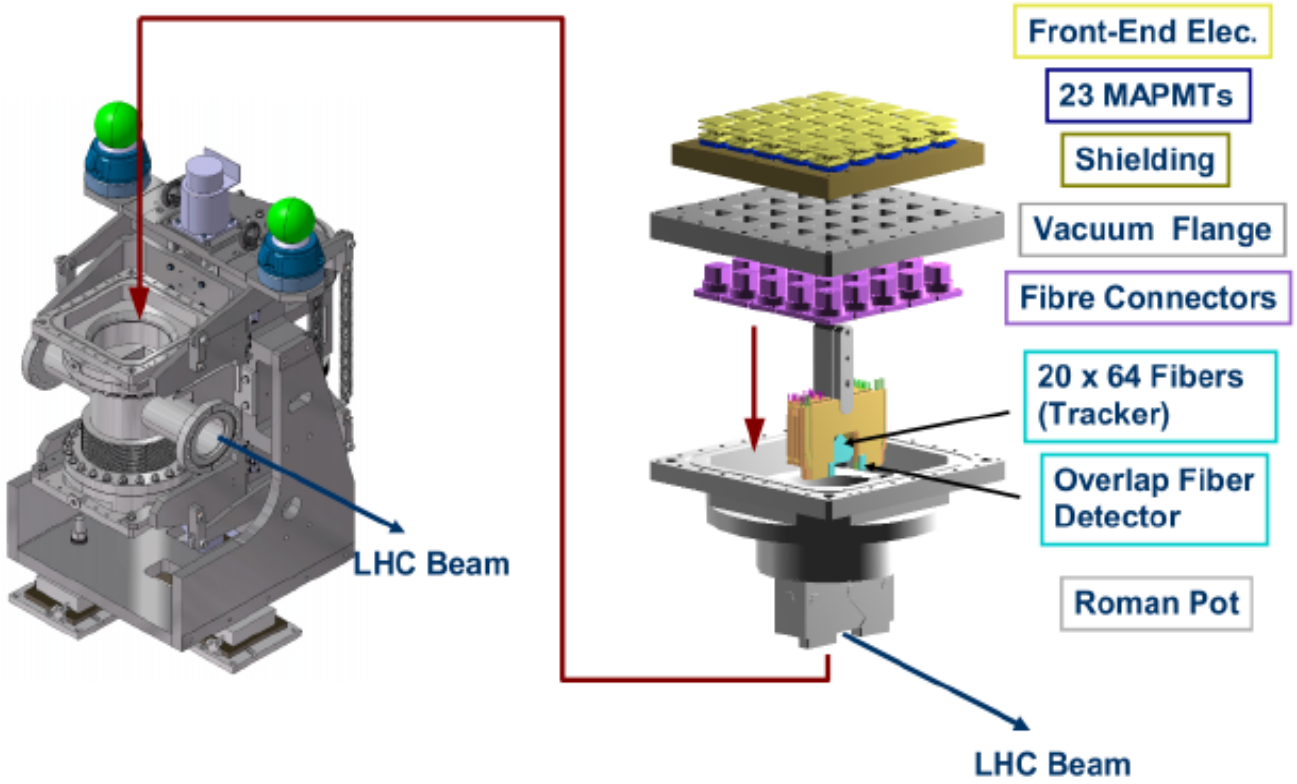

- Scintillating fibre detectors housed in Roman Pots
- Read out by Multi-Anode Photo-Multipliers (MAPMTs)

The ALFA Roman Pot Units - Details

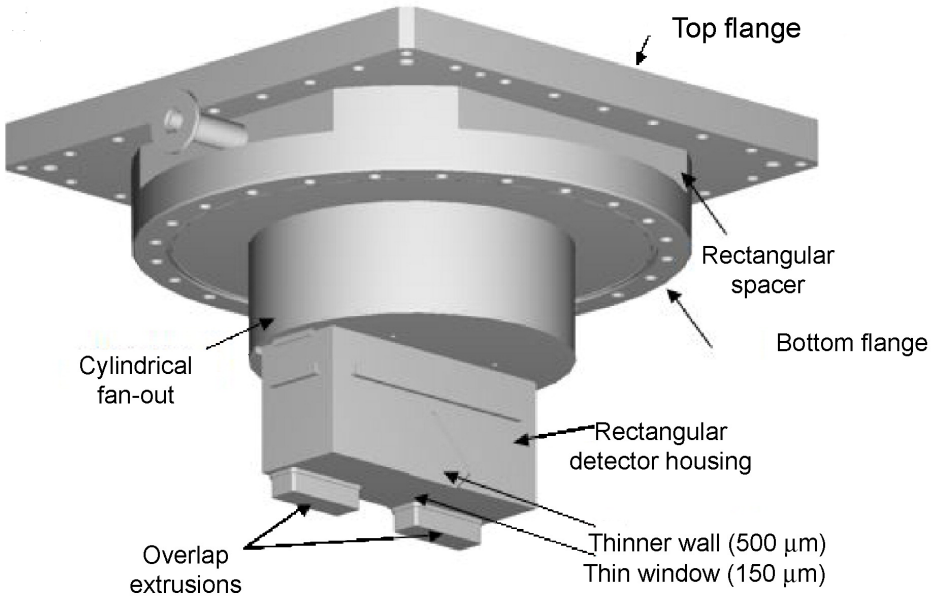

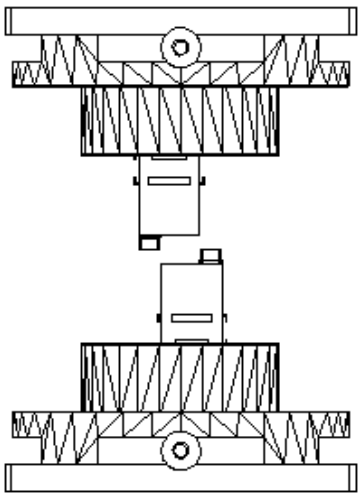

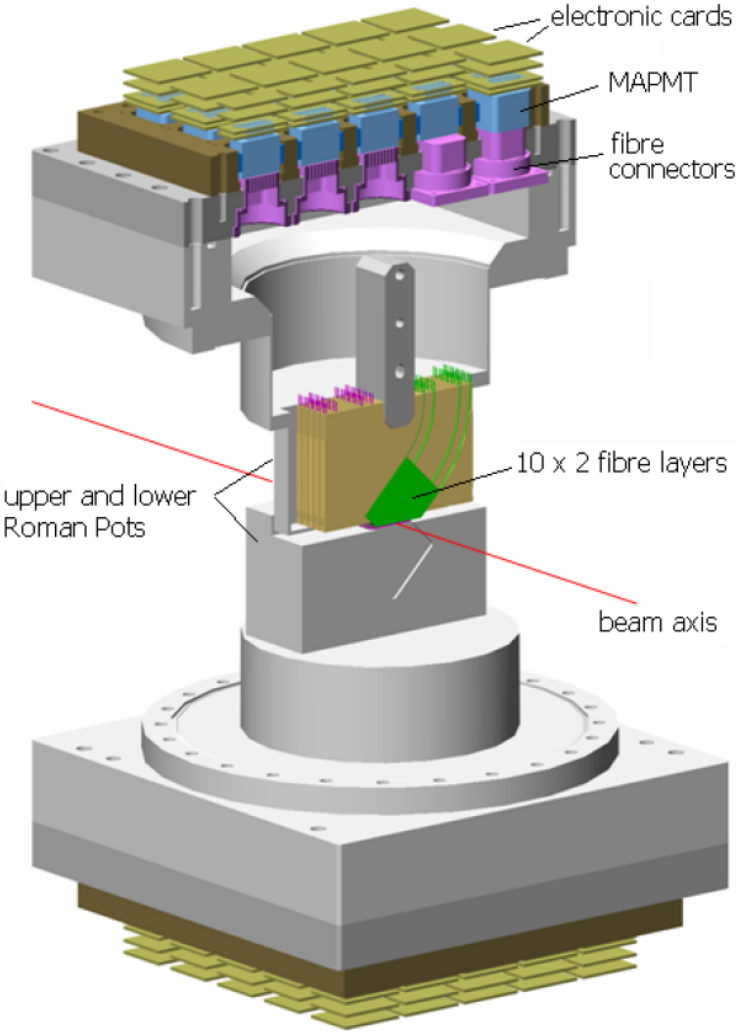

The scintillating fibre tracker

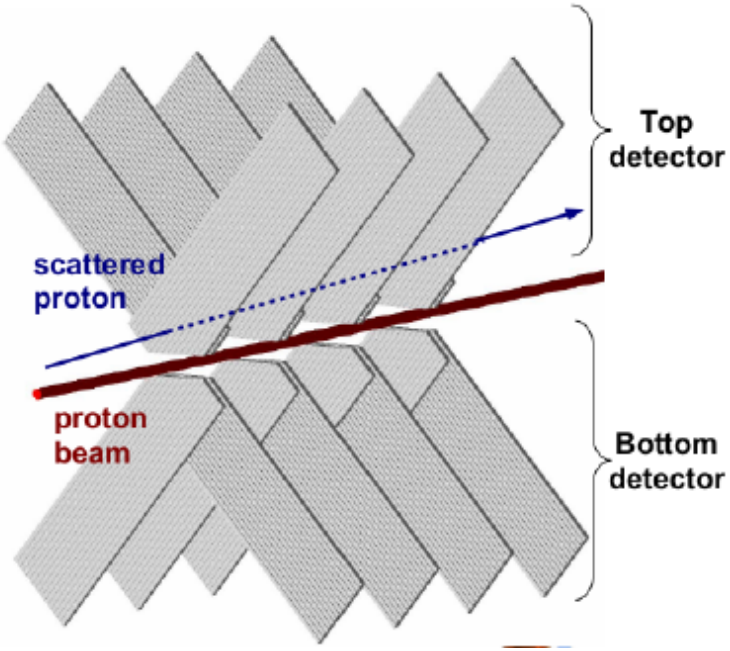

Tracker setup per pot:

- 64×2 scintillating fibres in UV-geometry
- Kuraray SCSF-78: $0.5 \times 0.5\,\mathrm{mm}^2$
- 10 planes staggered by 70.7 μm $(\frac{500\,\mu m}{10} \cdot \sqrt{2})$

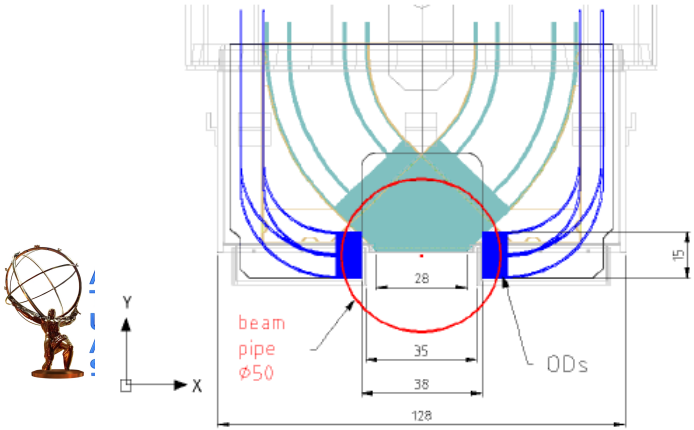

Overlap detectors per pot:

- Tracker for relative vertical positioning
- 3 planes staggered by 166.6 μm $(\frac{500\,\mu m}{3})$

The scintillating fibre tracker - Details

Tracker production steps:

1. G10 (plastic) substrate on electro-eroded titanium
2. Aluminium-coated plastic fibres . . .
3. . . . capilarity-glued to the ceramic
4. Precise metrology to determine exact fibre positions (DESY)

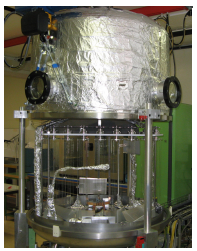

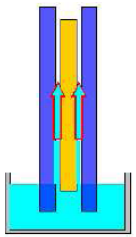

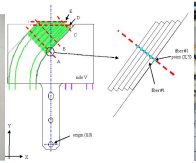

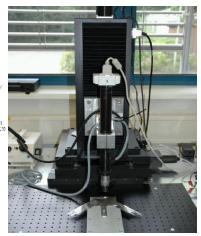

The scintillating fibre tracker - Details

Tracker production steps:

1. G10 (plastic) substrate on electro-eroded titanium
2. Aluminium-coated plastic fibres . . .
3. . . . capilarity-glued to the ceramic
4. Precise metrology to determine exact fibre positions (DESY)

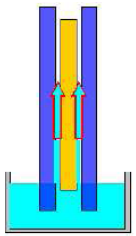
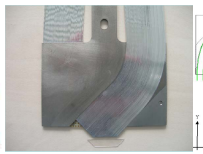
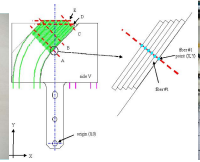
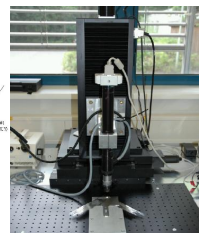

The scintillating fibre tracker - Details

Tracker production steps:

1. G10 (plastic) substrate on electro-eroded titanium
2. Aluminium-coated plastic fibres ...
3. ...capilarity-glued to the ceramic
4. Precise metrology to determine exact fibre positions (DESY)

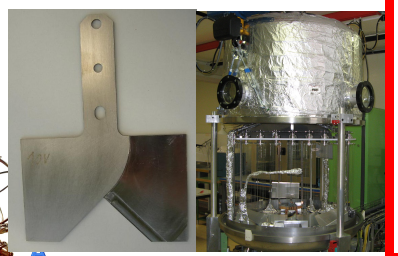

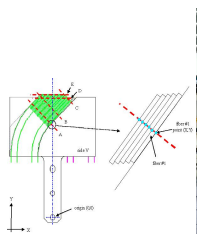
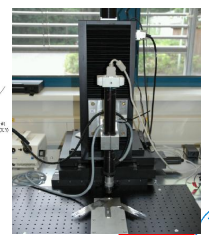

The scintillating fibre tracker - Details

Tracker production steps:

1. G10 (plastic) substrate on electro-eroded titanium
2. Aluminium-coated plastic fibres . . .
3. . . . capilarity-glued to the ceramic
4. Precise metrology to determine exact fibre positions (DESY)

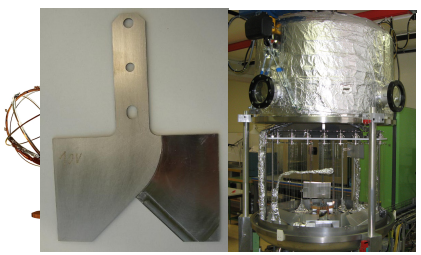

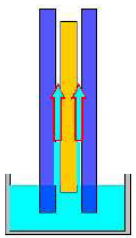

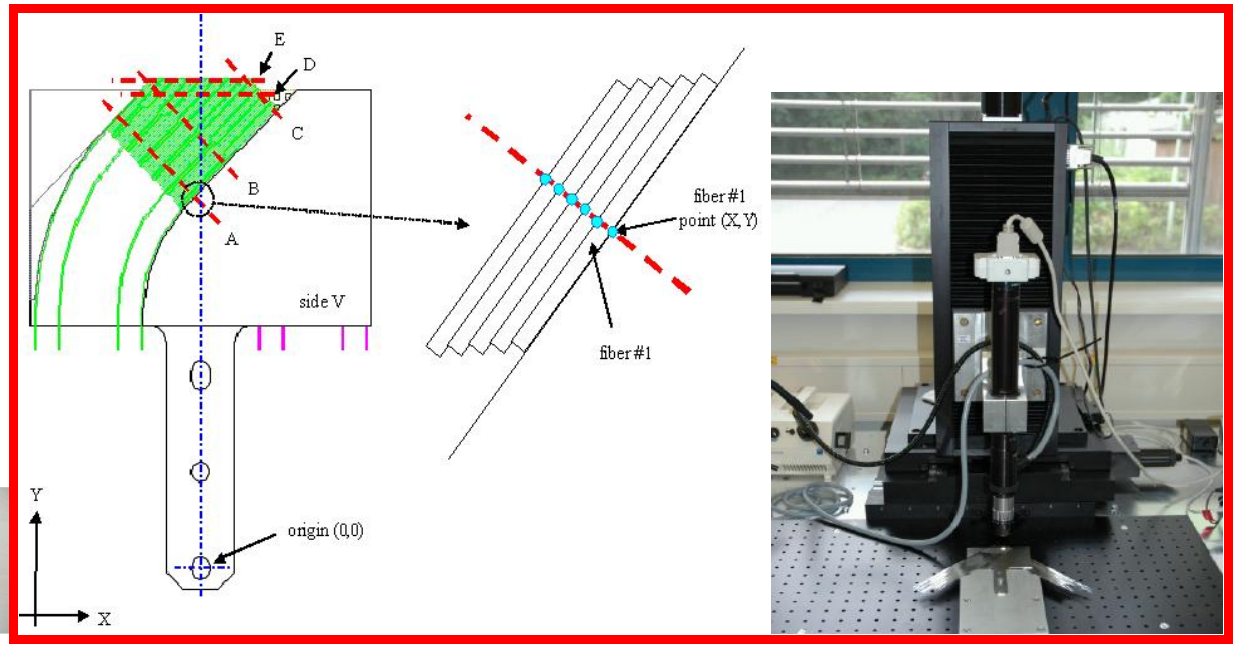

Tracker assembly and trigger counters - pictures

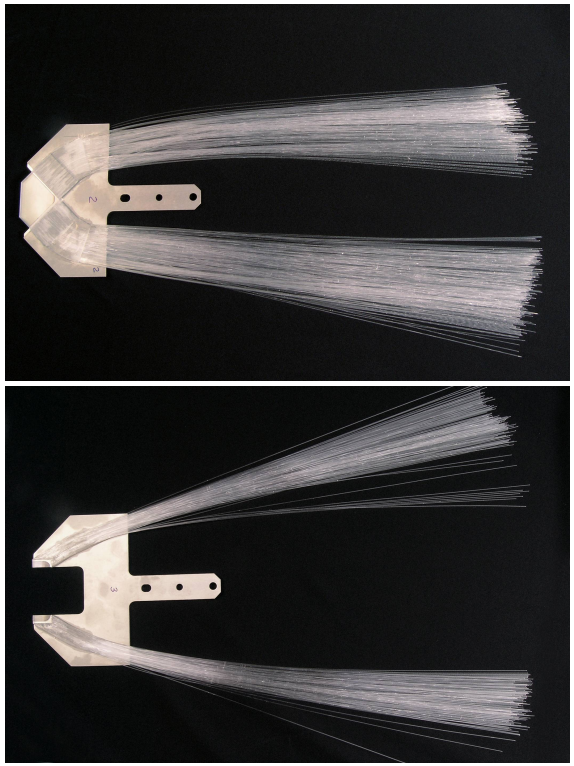

Figure: Left: Tracker plates assembled with fibres routed to MAPMTs. Right: Main and overlap trigger counters with clear fibres.

ALFA electronics - general overview

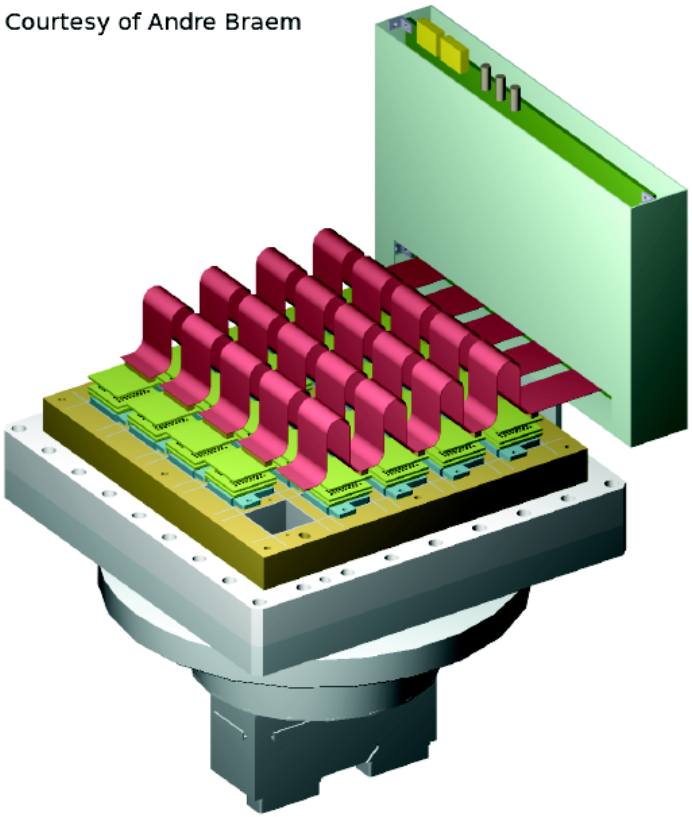

ALFA electronics components

- MAPMTs with 64 channels each (one fibre per channel)
- PM Front-end electronics on MAPMTs (PMFs) . . .
- . . . connected via kapton cables to one motherboard per pot
- DAQ- and readout-electronics in ATLAS caverns

ALFA electronics - details

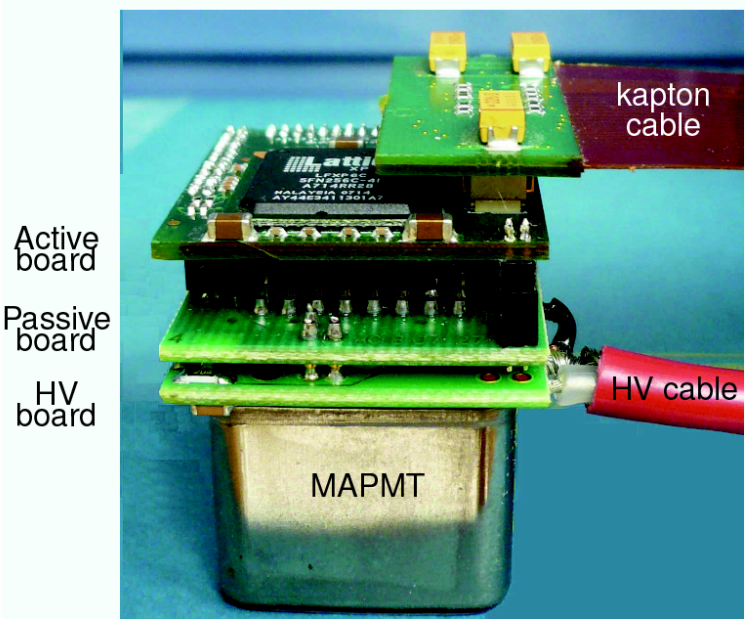

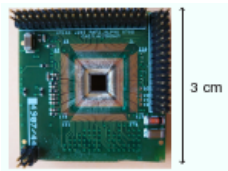

MAROC side

Lattice side

- High Voltage board to bring HV to MAPMT
- Passive board to route signal to the edges
- Active board: 10 layers PCB with MAROC on one side and a directly connected FPGA (lattice) on other side

ALFA electronics - details

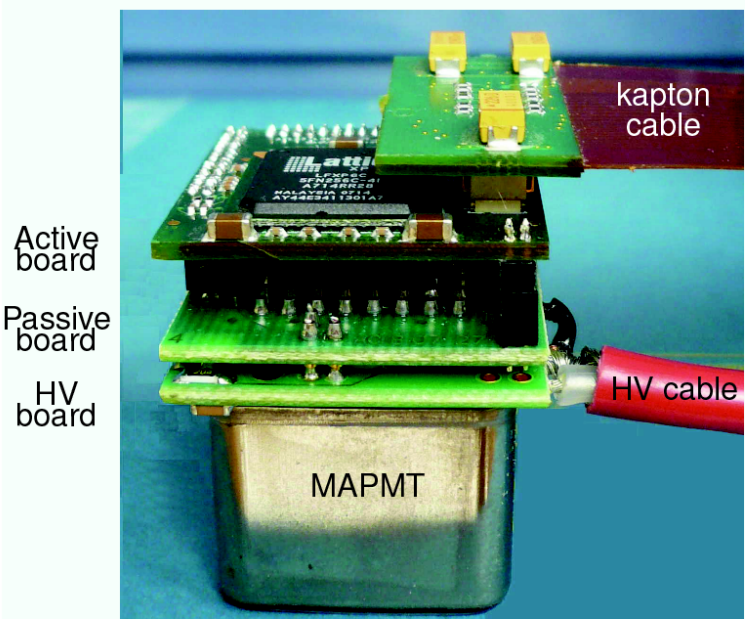

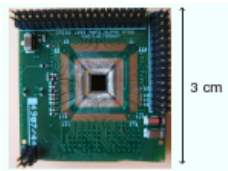

MAROC side

Lattice side

- High Voltage board to bring HV to MAPMT
- Passive board to route signal to the edges
- Active board: 10 layers PCB with MAROC on one side and a directly connected FPGA (lattice) on other side

ALFA electronics - details

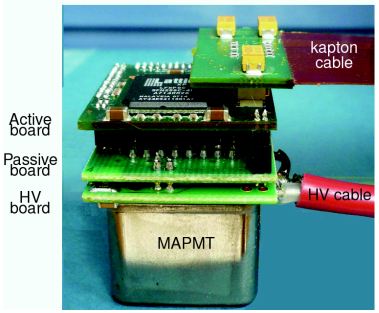

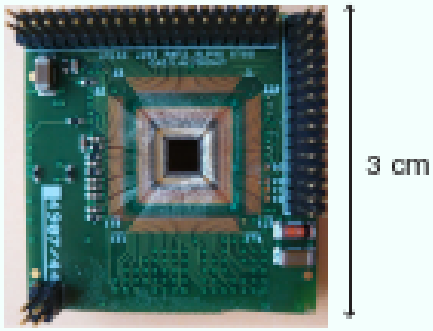

MAROC side

Lattice side

- High Voltage board to bring HV to MAPMT
- Passive board to route signal to the edges
- Active board: 10 layers PCB with MAROC on one side and a directly connected FPGA (lattice) on other side

ALFA mechanics - vacuum compensation system

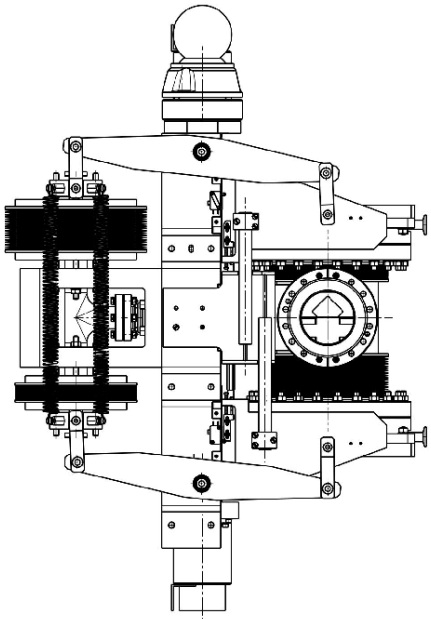

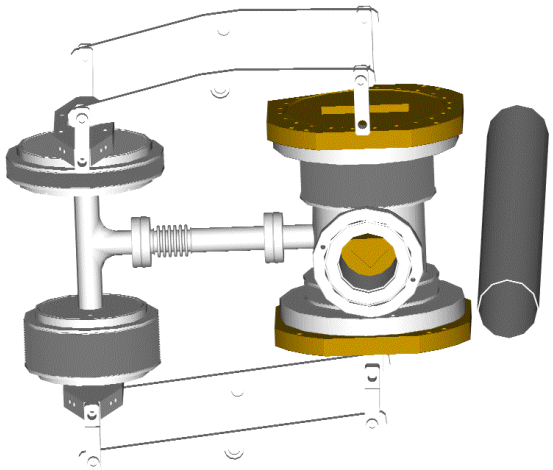

- Roman Pot bellows part of main LHC vacuum
  - ⇒ Each pot pulled into LHC with 2.7 kN force

⇒ Interconnected vacuum compensation system with upto 3.6 kN force

ALFA mechanics - vacuum compensation system

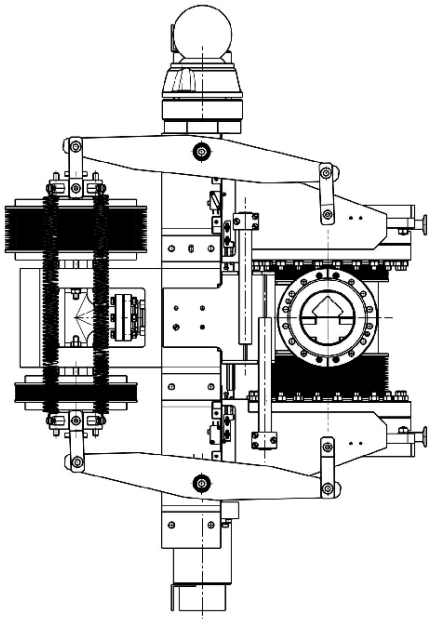

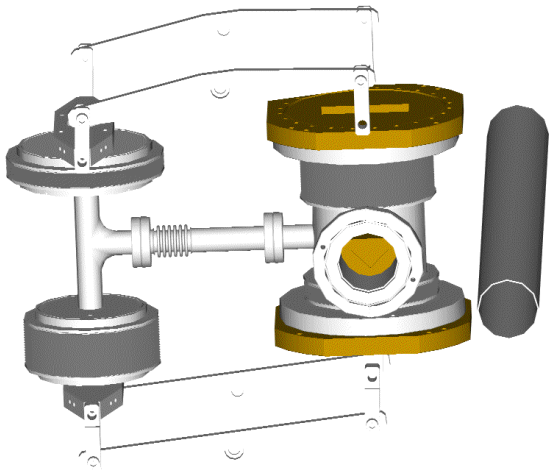

- Roman Pot bellows part of main LHC vacuum
  - ⇒ Each pot pulled into LHC with 2.7 kN force

⇒ Interconnected vacuum compensation system with upto 3.6 kN force

Safety measure:

Bellows are automatically pulled out of beam in case of electricity loss

ALFA mechanics - pictures

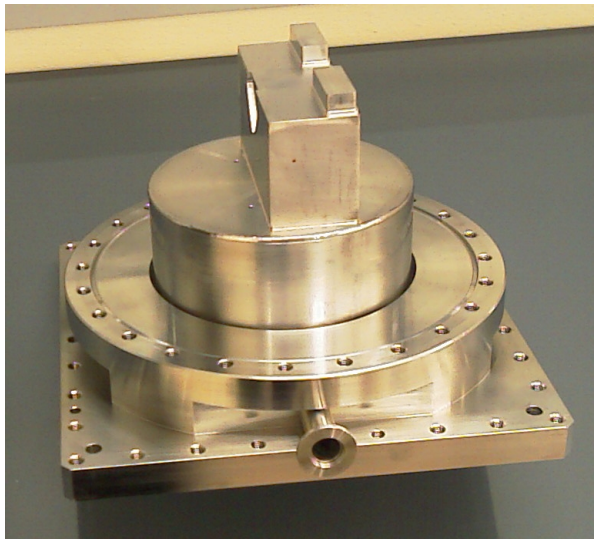

Figure: Left: Roman Pot Units after production. Right: Roman Pot prototype

Testbeam in 2008

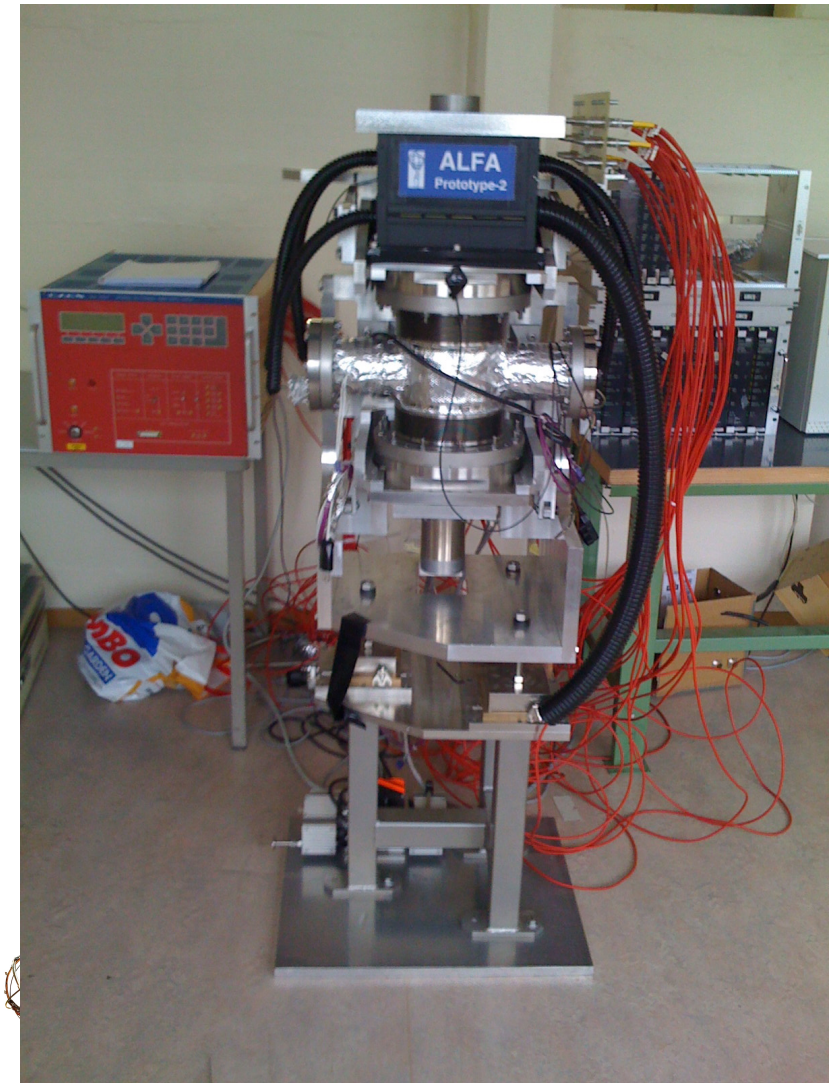

Reasons to have a test beam:

- Test all components together under ”real” conditions
- Check if estimated resolution is achievable
- Gain experience with DAQ, electronics and settings

Testbeam in 2008

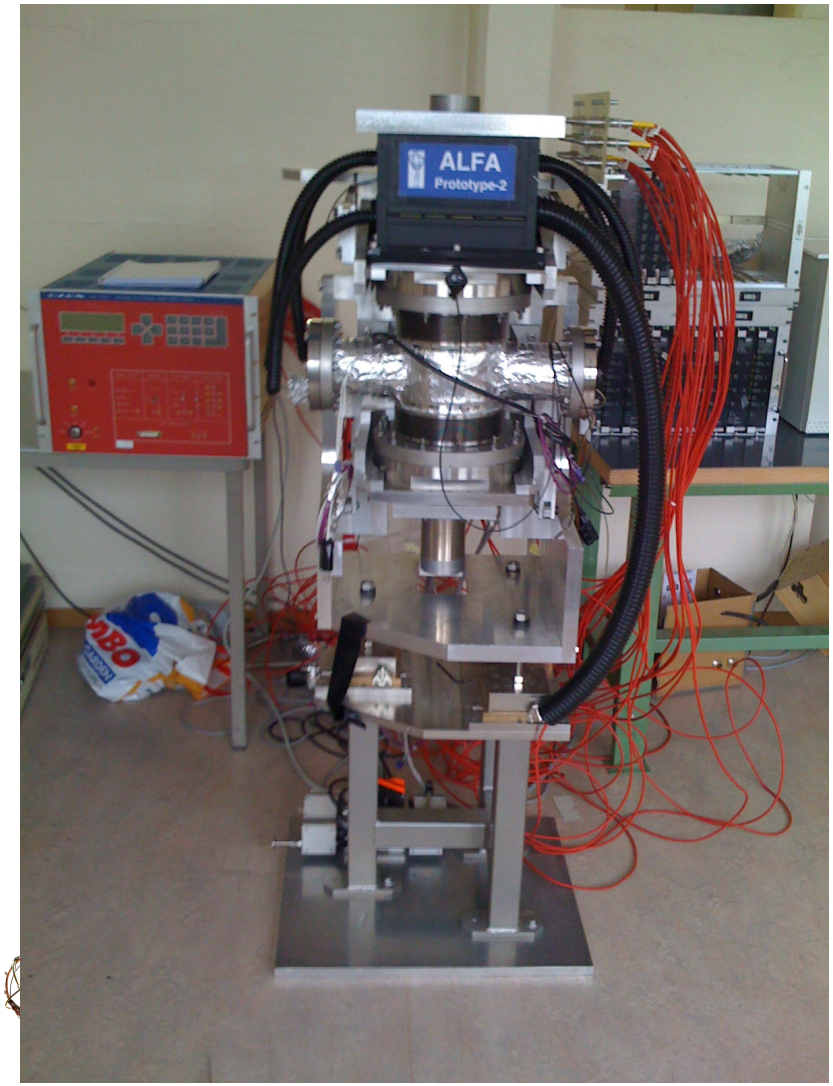

Schedule

- Test beam stand in the SPS experimental halls at CERN
- Beamtime: 3 weeks in august with 180 GeV pions
- Electronics-, LED- and possibly cosmics-test in lab until August 1
  - $\Rightarrow$ move all equipment incl. Roman Pot Unit to test beam area afterwards

Testbeam setup

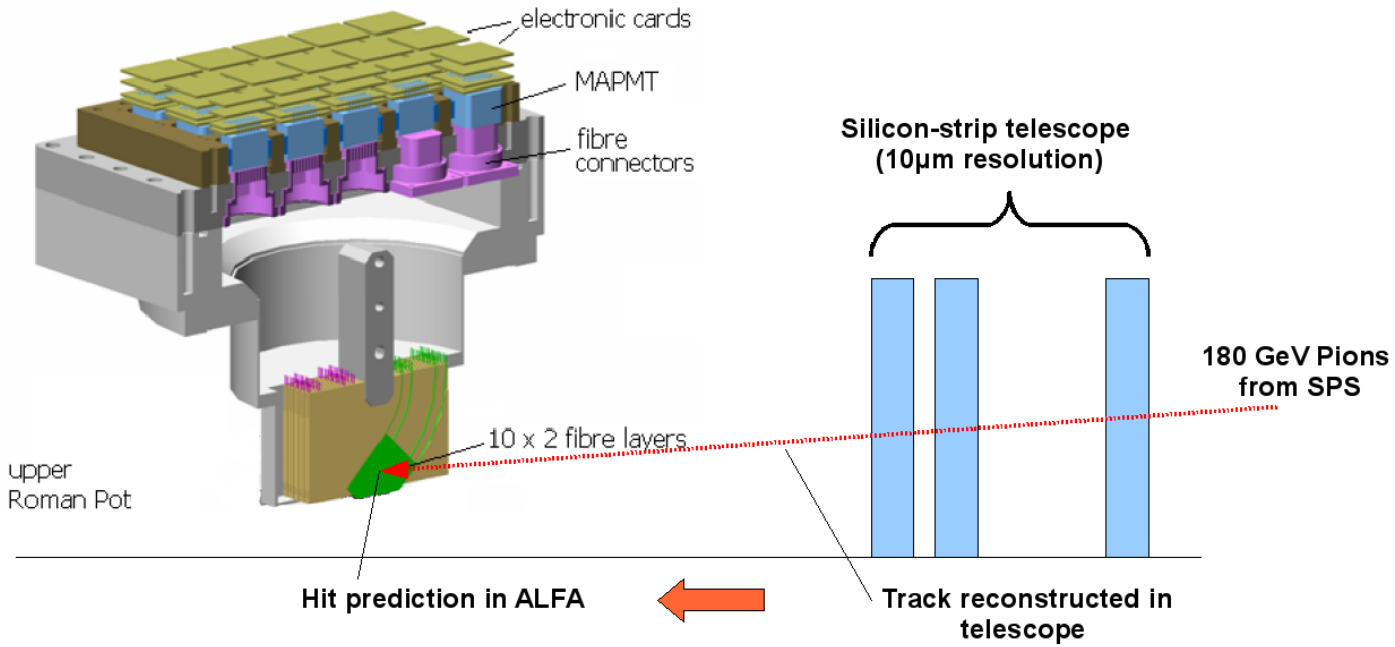

Testbeam components:

- One ALFA Roman Pot Unit
- 10 tracker plates, 3 overlap- and 2 trigger plates w/o Pot
- 2 sets of motherboards - testing (Orsay) and ”final” (Lund)
- Silicon-strip telescope with 10 μm resolution

Testbeam activities

Activities in test beam area (chronological):

- Lund motherboard:
  - ∼200 ns latency problem with motherboard
  - ∼150.000 triggers counted
- 2 Orsay test boards:
  - only 2 kapton cables connected → 10 PMTs
  - parameter scans: HV, kapton combinations, gain, DAC and x/y
  - ∼650.000 triggers counted
- Lund motherboard:
  - reduced parameter scans: HV, DAC and x/y
  - ∼370.000 triggers counted

Testbeam results

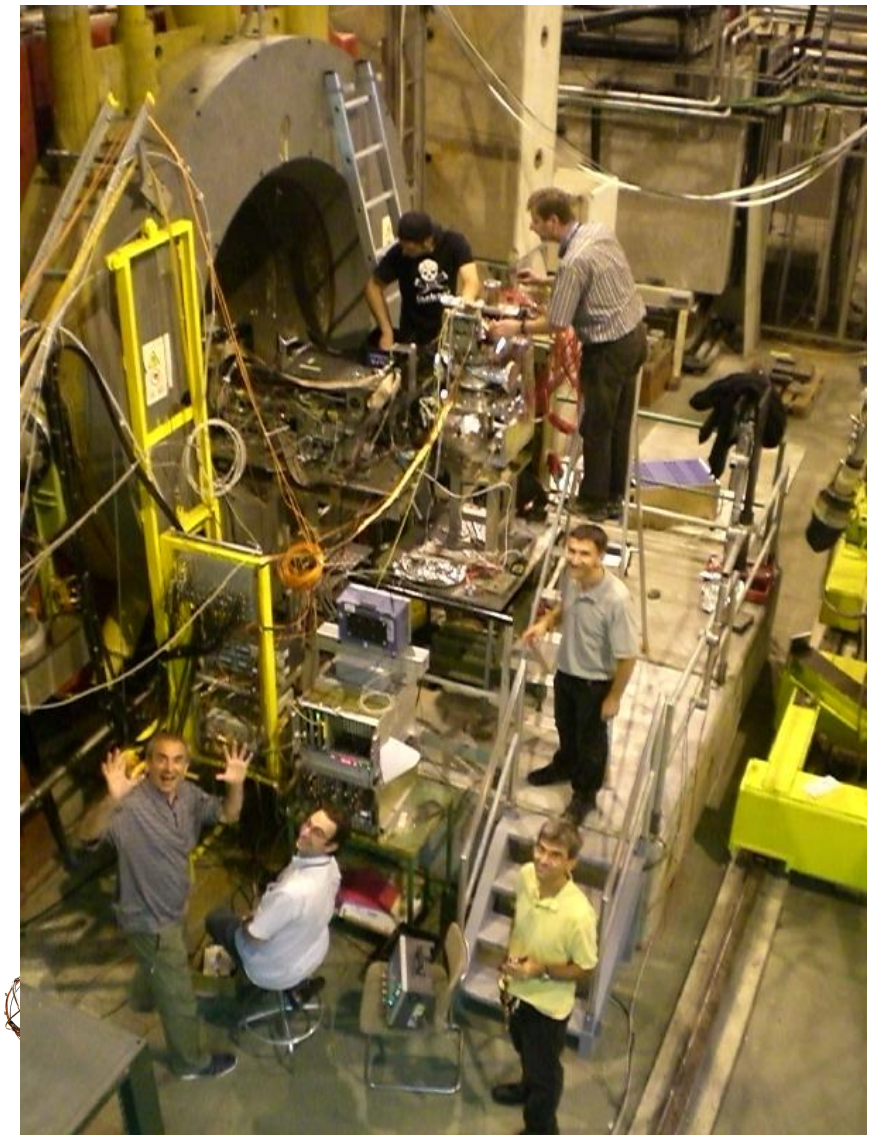

In the end...

- Collected altogether one million triggers with different parameter settings
- Several successful runs, with different motherboards

$\Rightarrow$ Everyone gained a lot of insight into ALFA project and experience with electronics

Testbeam analysis results with Orsay-board

Hits: prediction and data (preliminary!)

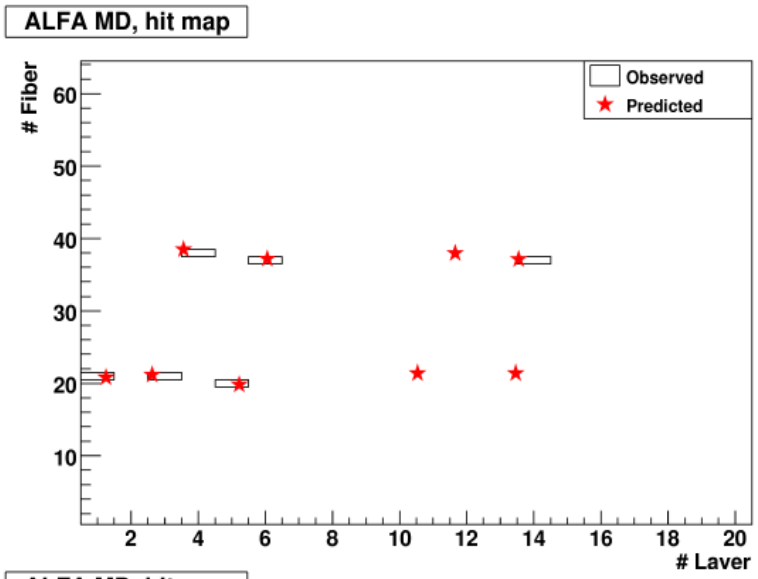

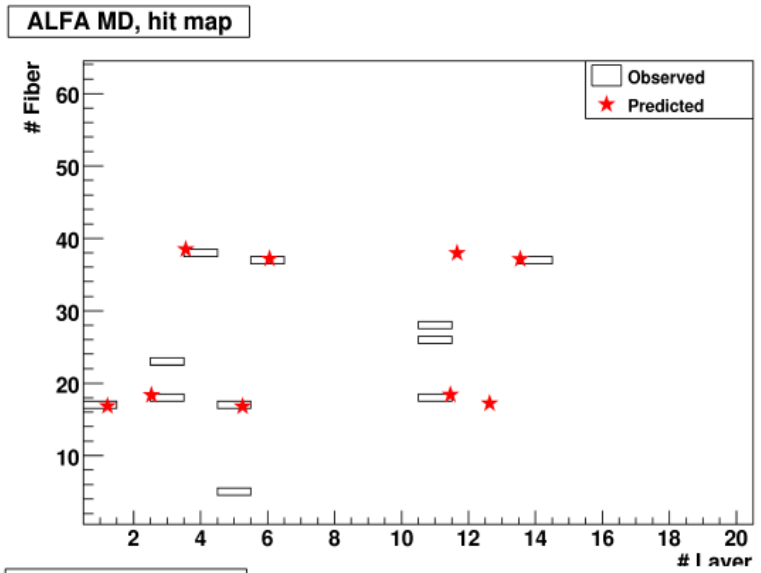

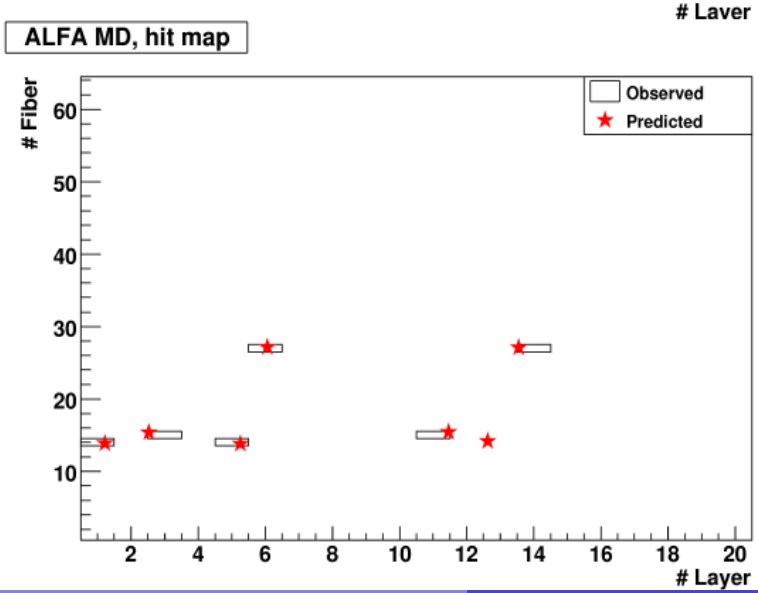

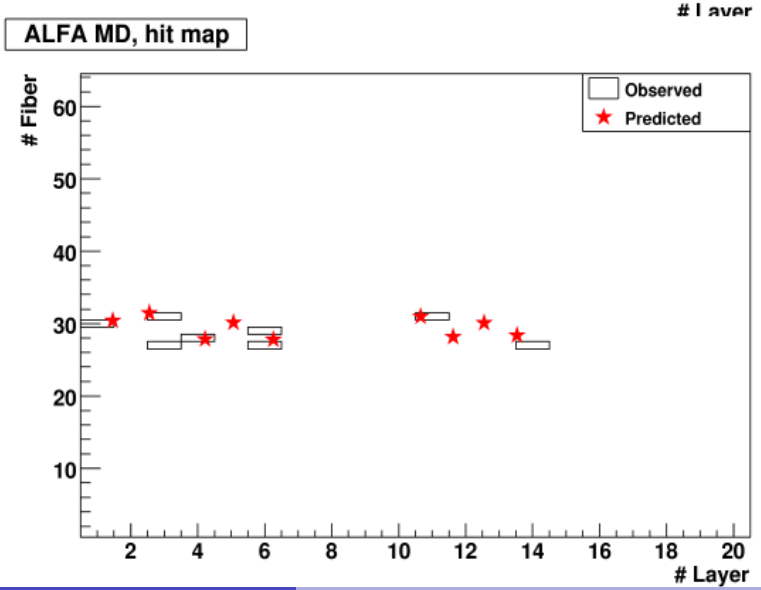

Testbeam analysis results with Orsay-board

Efficiency per layer (preliminary!)

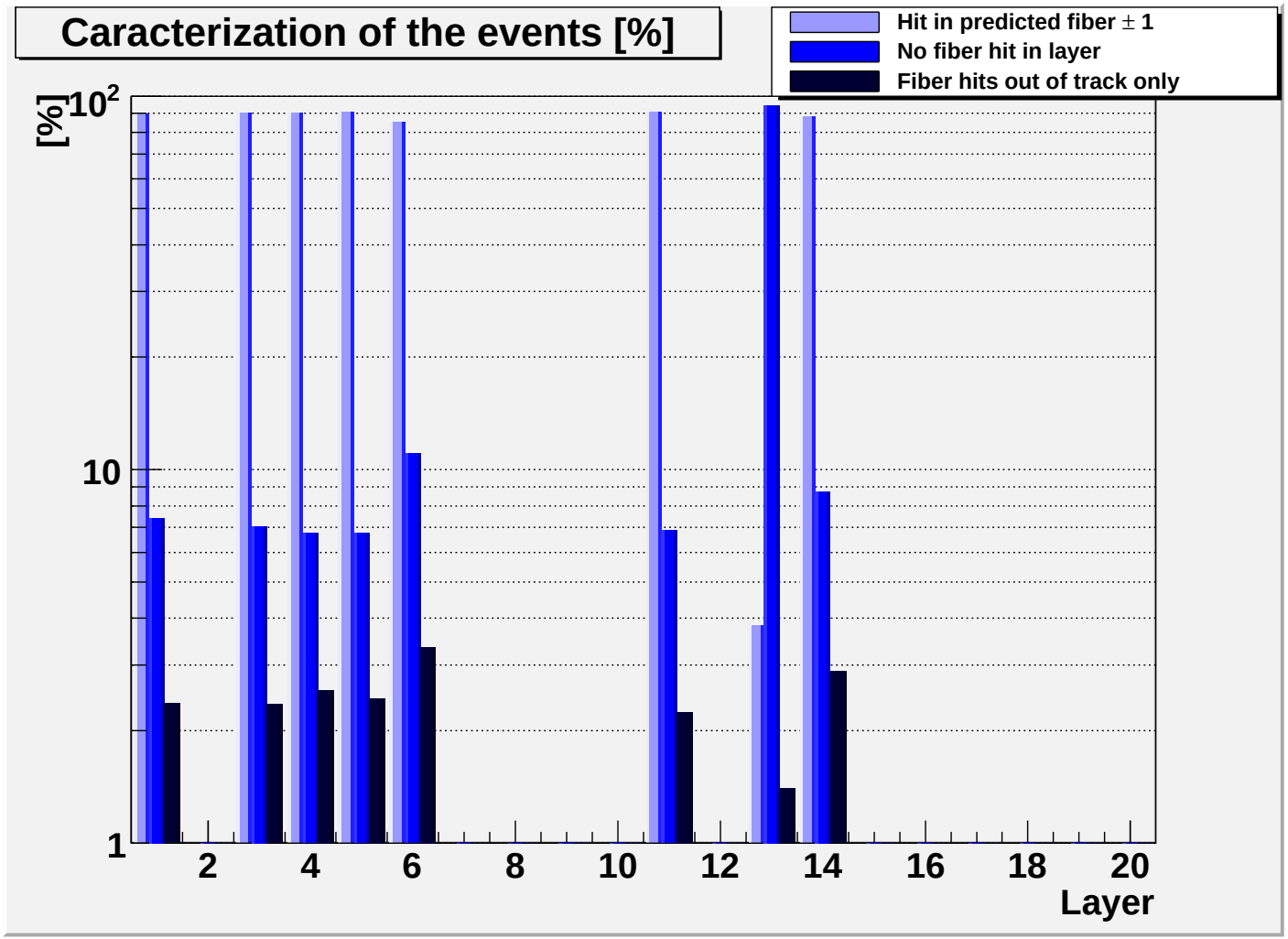

Testbeam analysis results with Lund-board

S-curves: Efficiency vs. charge (preliminary!)

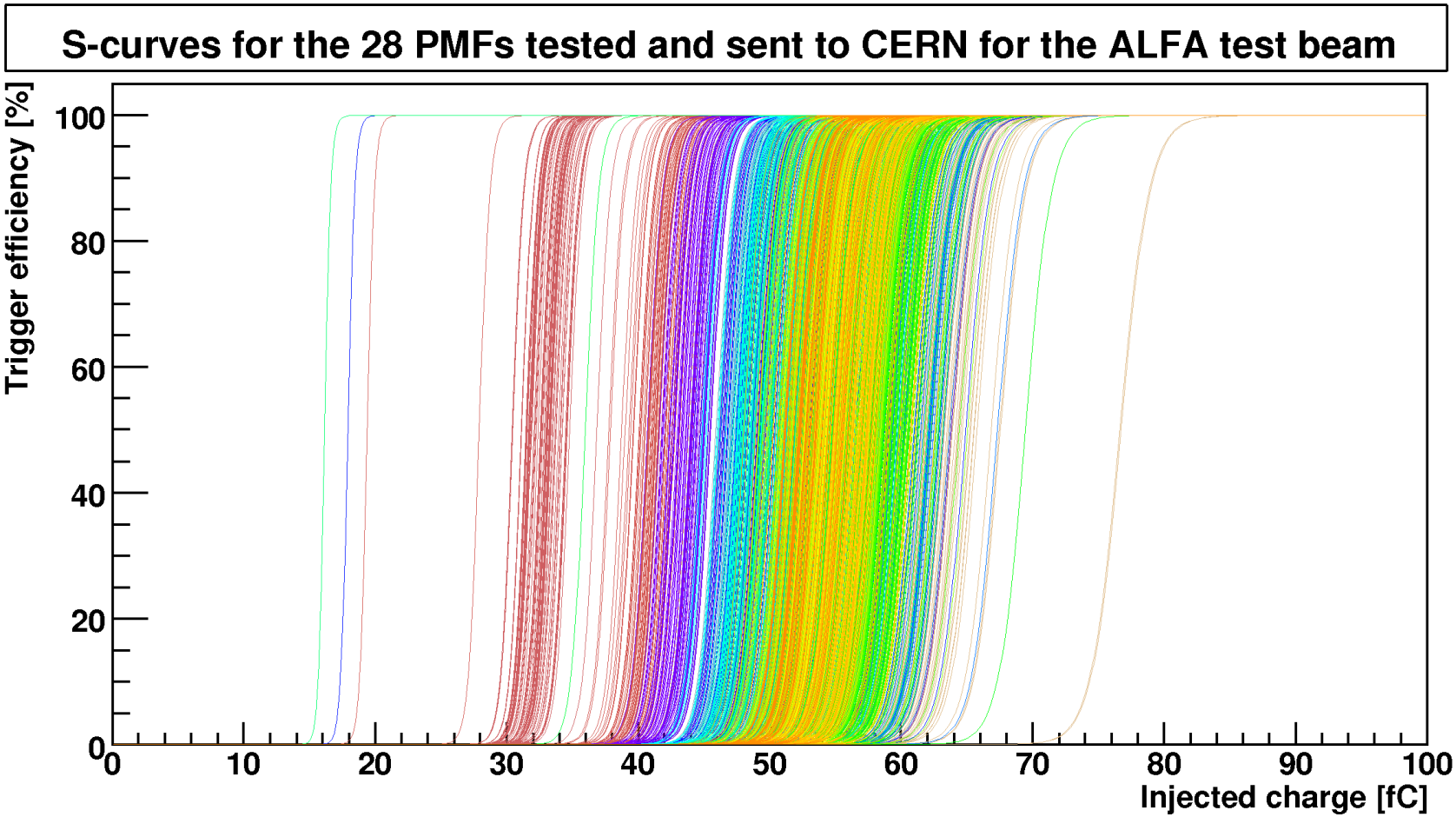

ALFA installation schedule

Targeted Schedule

- Be ready for installation w/o pots by February 2009
- Be ready for installation with pots by mid April 2009

By then...

- Build mock-up of tunnel environment to practice installation in tunnel
- Final commissioning of all 4 units on surface

ALFA installation schedule

Targeted Schedule

- Be ready for installation w/o pots by February 2009
- Be ready for installation with pots by mid April 2009

By then...

- Build mock-up of tunnel environment to practice installation in tunnel
- Final commissioning of all 4 units on surface

ALFA run schedule

- Be ready for runs in 2010
  - depends largely on general LHC status
- $\sim$ 2 weeks beam time with "high-beta"-optics per run

Summary & conclusion

- **A**bsolute **L**uminosity **F**or **A**TLAS
- Measure absolute luminosity in Coulomb-Nuclear-Interference region
- Scintillating fibre technology to approach beam in mm-range
- Successful test beam during summer 2008 at CERN
  - $\Rightarrow$ Getting ready for installation this year

Conclusion:

Although development and construction of ALFA are not yet finished, the project is progressing with large steps to become an important part of the ATLAS collaboration!

Thank you!

ALFA TDR: `http://cdsweb.cern.ch/record/1095847`