HEPHY Institute of High Energy Physics

ÖAW Austrian Academy of Sciences

ITAINNOVA

Belle II

SVD

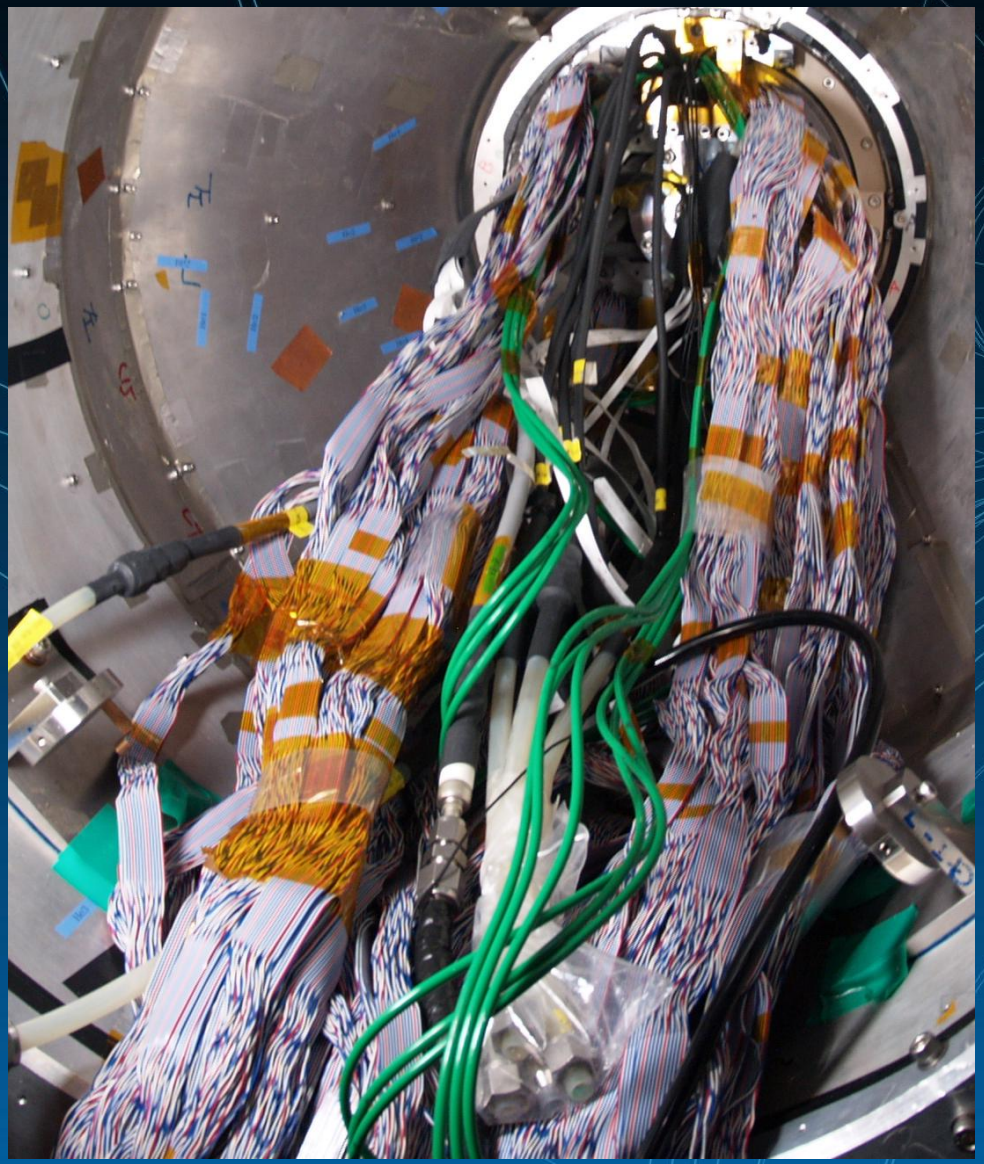

TWEPP-15 Lisbon, 2015-09-29

EMC Studies for the Vertex Detector of the Belle II Experiment

Richard Thalmeier (HEPHY Vienna)

- **Belle II - Introduction**
- SVD EMC Tests
- PXD Power Cable Studies
- Conclusions and Outlook

Future Belle II @ KEK

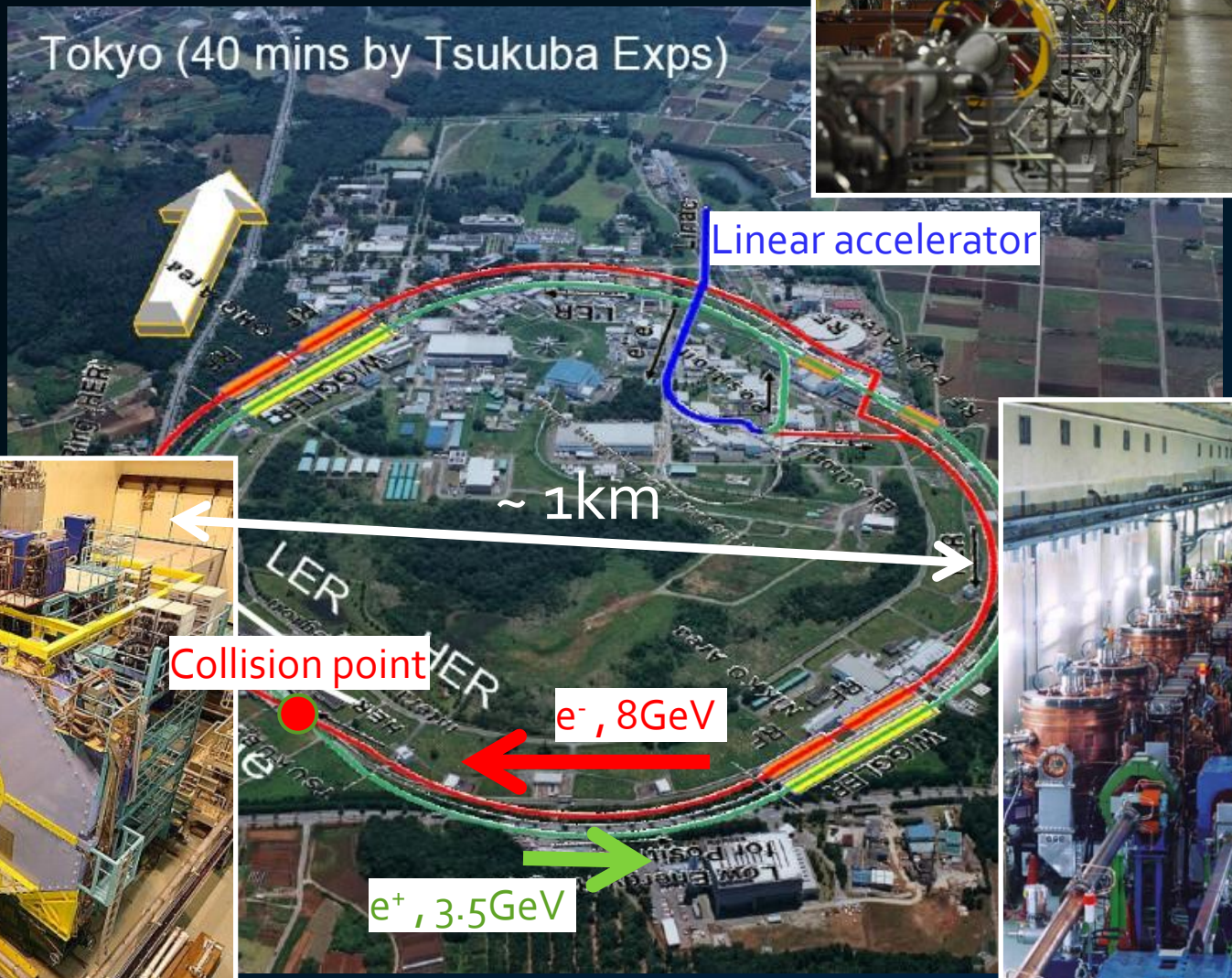

Photos are from Belle I Experiment

The Belle I Detector (Collision point)

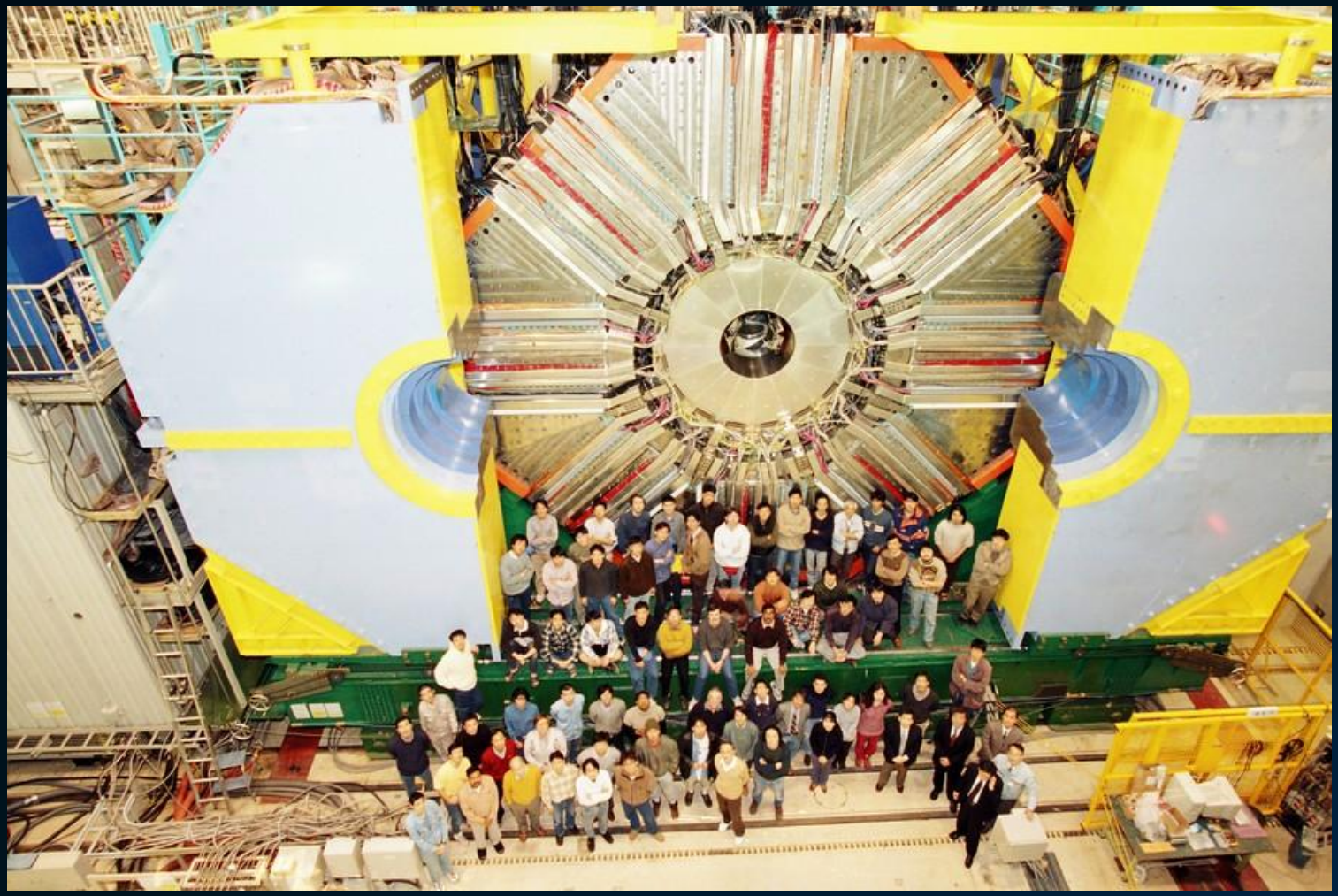

- ~7m high,
- ~ 10m long,
- ~1500 tons

Belle II Vertex Detector VXD = PXD + SVD

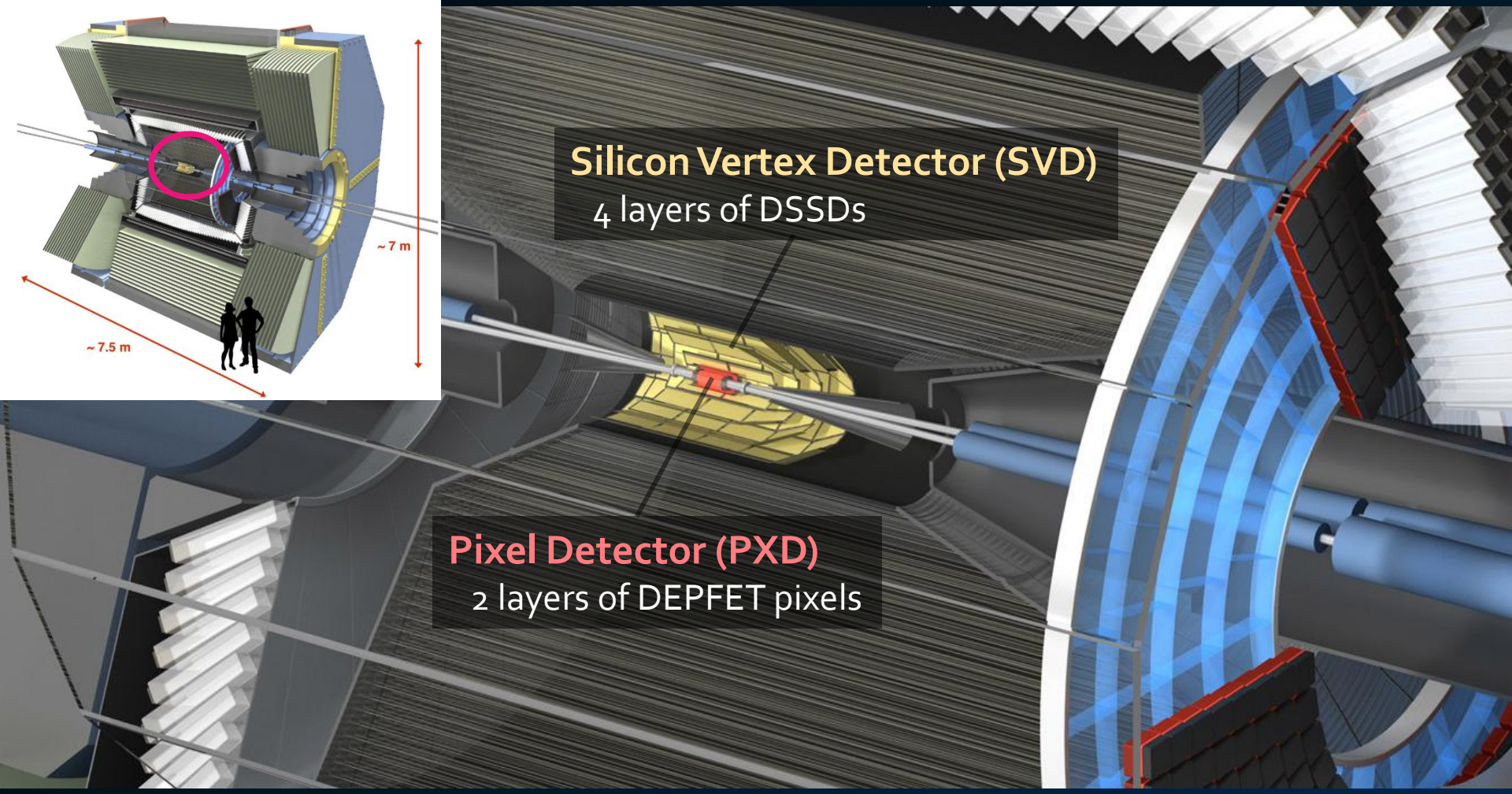

Belle II Vertex Detector

- **Pixel Detector (PXD)**
  - 8M pixels
  - 2 layers at r = 14, 22 mm
  - Excellent spatial resolution (~15 µm)
  - Coarse time resolution (20 µs)
- **Silicon Vertex Detector (SVD)**
  - 4 layers DSSD at r = 38, 80, 104, 135 mm
  - Good resolution: ~12 (p) and 25 (n) µm, but ambiguities due to ghosting
  - Excellent time resolution (~3 ns)

Combined they give a very powerful device!

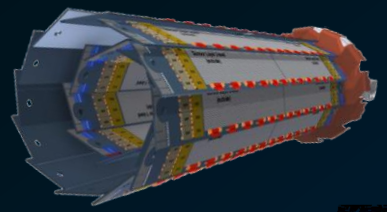

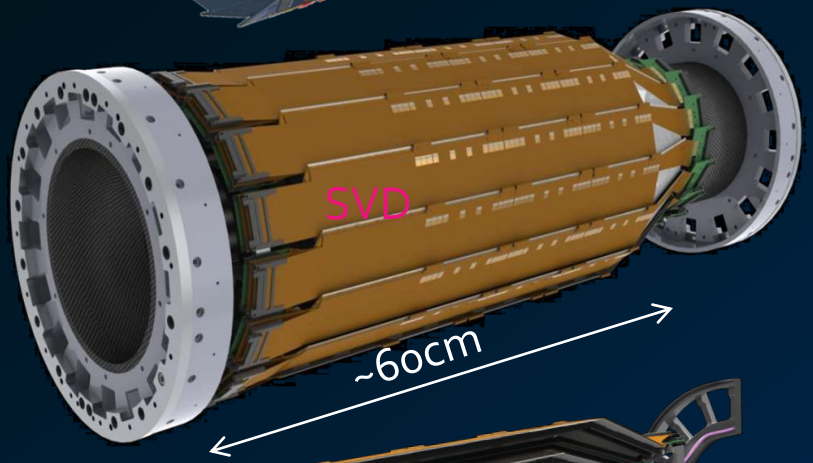

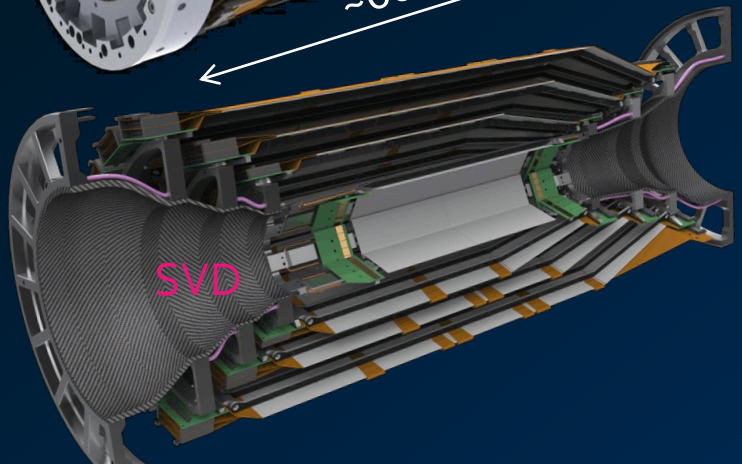

Belle II Vertex Detector VXD = PXD + SVD

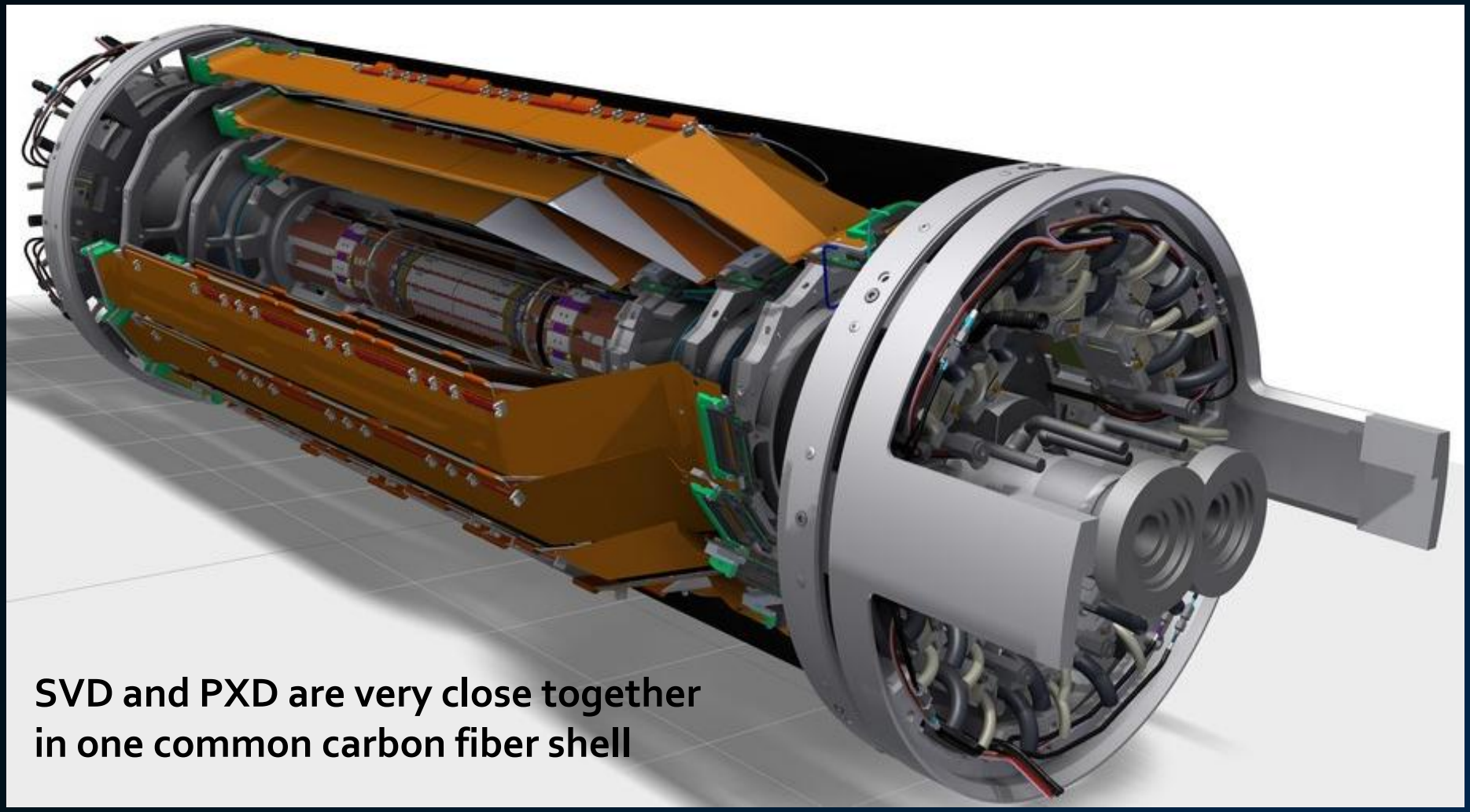

SVD and PXD are very close together in one common carbon fiber shell

Belle I Readout Cabling

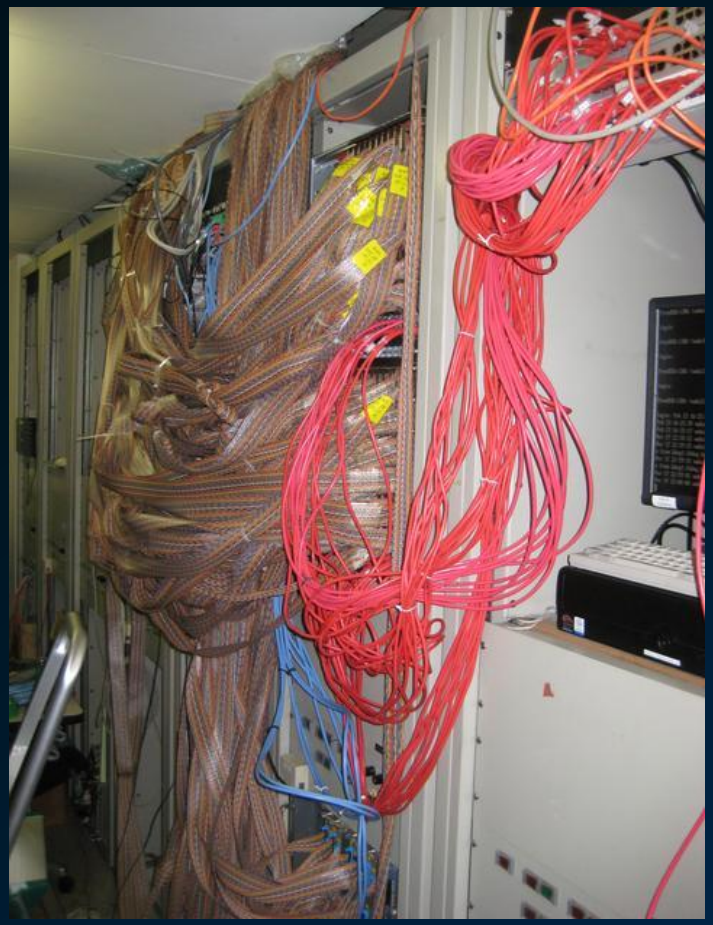

Belle I only had SVD Detectors, no PXD.
Belle II will be much more complex: SVD + PXD, sharing same cable tunnels.

- Belle II - Introduction
- **SVD EMC Tests**
- PXD Power Cable Studies
- Conclusions and Outlook

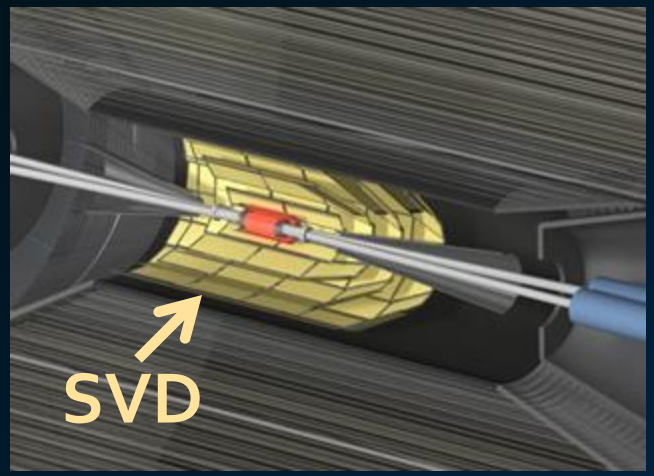

First Combined SVD/PXD Beam Test 2014-01

- SVD installed alone worked perfectly
- PXD installed → Excessive noise problems in SVD
- SVD Noise was even present with PXD switched off
- Problems have been somehow diminished to a fairly working level by grounding some points to the magnet housing…
- There has no very serious EMC research been done before.

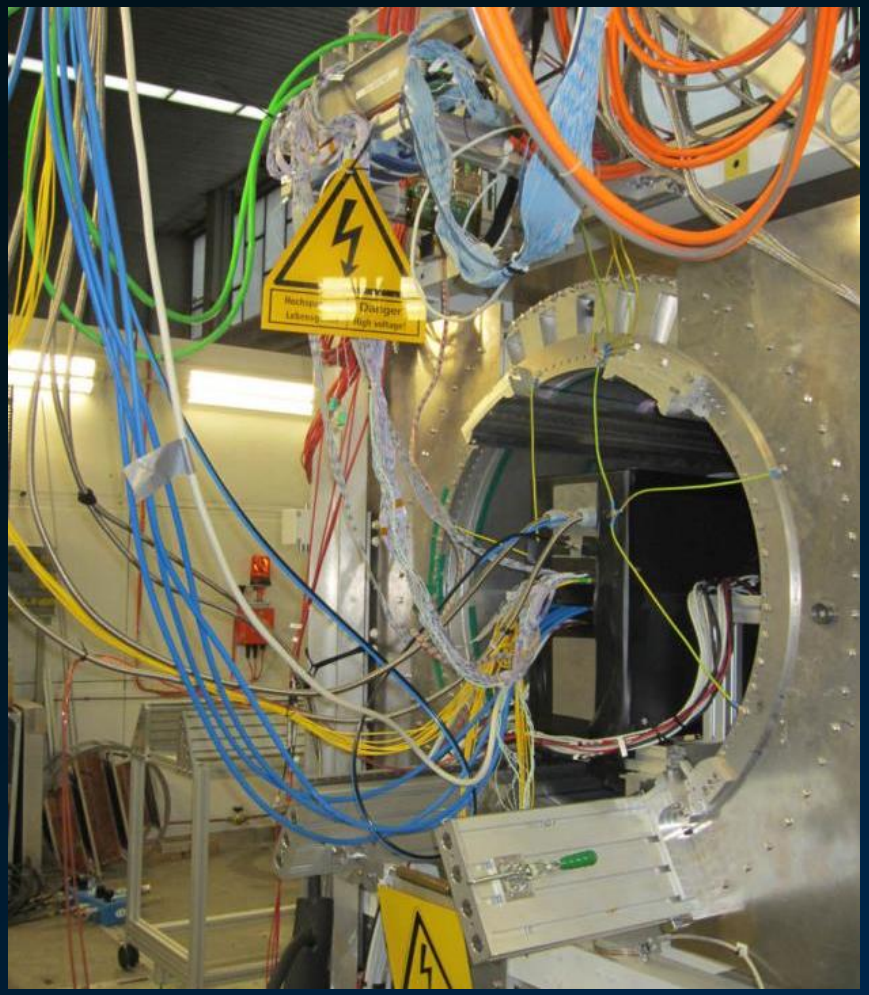

EMC Basics

Noise Coupling Mechanisms:

- Conductive Coupling
  - Common Mode
  - Differential Mode
- Inductive /Magnetic Coupling
- Capacitive Coupling
- Electromagnetic/Radiative Coupling
  - Distance more than a wavelength

Noise Measurement methods:

- Susceptibility/Immunity Testing (by injecting noise)
- Emissions Testing (by measuring own noise output)

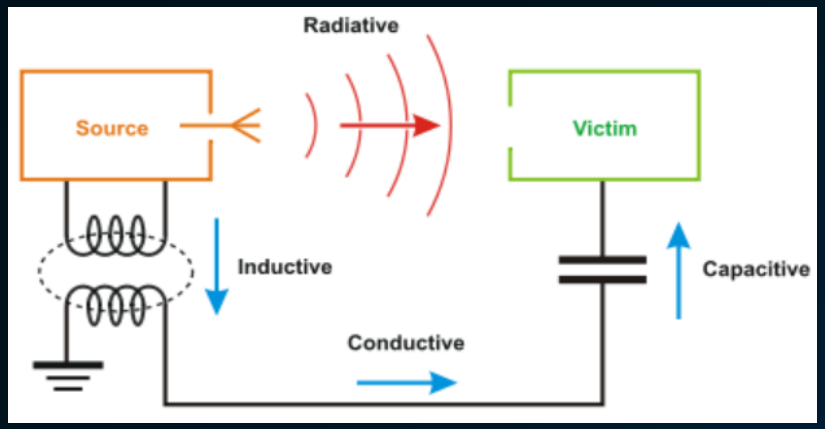

Corrective actions:

- Grounding
- Shielding
- Filtering
- Diminishing the source
- Avoiding of wire loops, antenna structures, …
- Electrical separation
- Spatial separation
- less noisy components
- …

- Belle II - Introduction
- SVD EMC Tests
  - SVD Data Readout and Power Scheme
  - APV25 Sensitivity measurement
  - DC/DC-Sensitivity measurement
  - Emission Tests
  - First conclusion of the SVD EMC Tests
  - CAEN Power Supply issue
  - SVD Frontend Hybrid Bias Capacitor issue
- PXD Power Cable Studies
- Conclusions and Outlook

APV25 Front-End Chip (1748x)

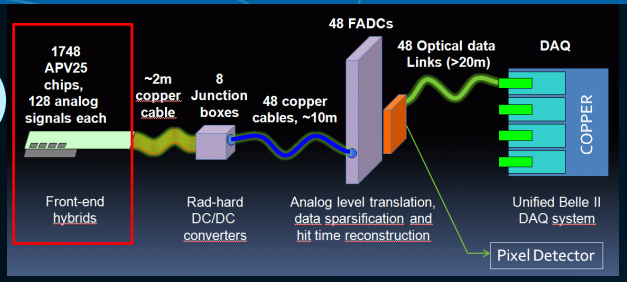

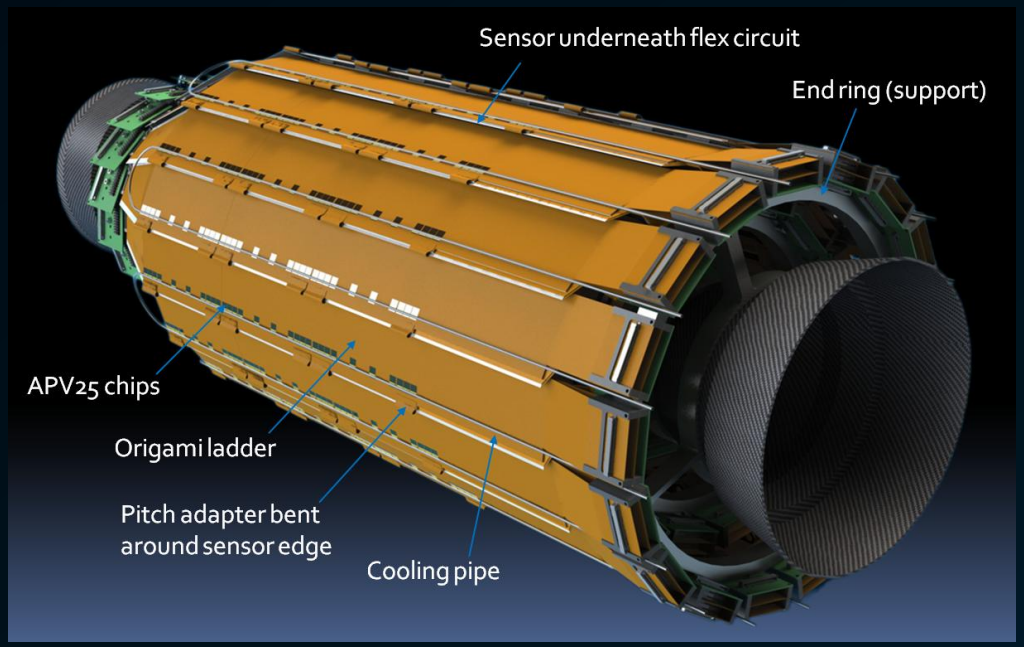

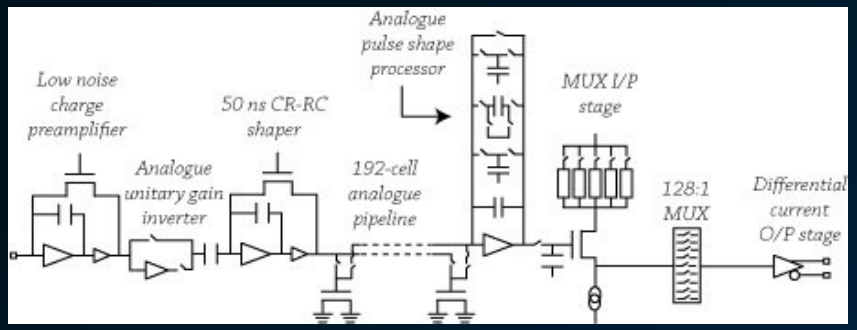

- 128 channels per chip
- Analog input for each silicon strip
- Amplifier, Analog pipeline,
- Time multiplexed Analog LVDS output
- Power: 1.25V and 2.5V, total 350mW

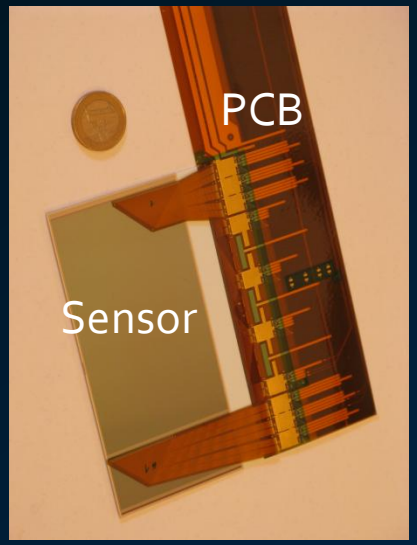

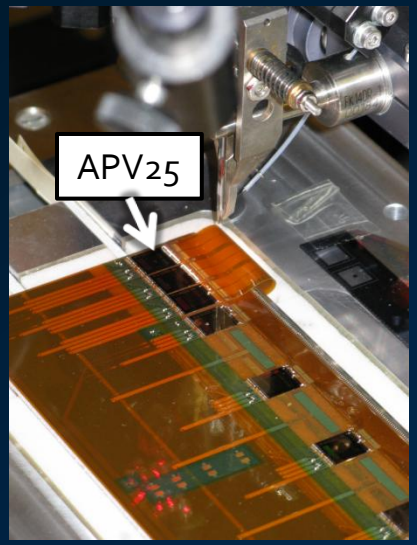

SVD Data Readout and Power Supply

Radiation: ~ 10 Mrad, Magnet.: 1.6T

Front-end hybrids with 1748x APV25-chips, 128 analog channels each, on 172 sensors.

~2m copper cable

8x Junction boxes with rad-hard DC/DC-converters

copper cables, ~17m, time multiplexed analog voltages

48x FADC in 4 crates.

48x FTB

48x Optical data Links (>20m)

Data Acquisition (DAQ)

COPPER

Power Supplies

Pixel Detector (DATCON)

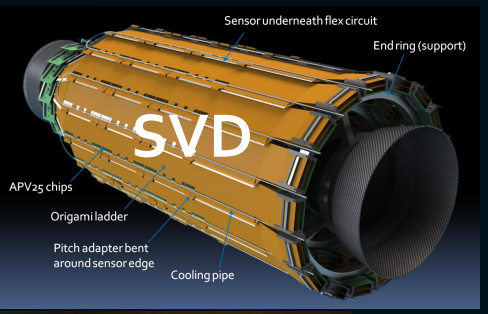

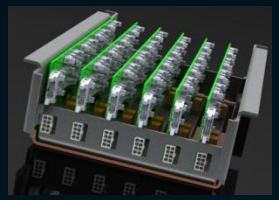

Junction Box

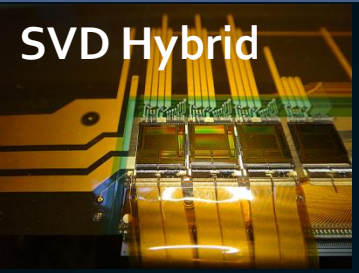

SVD Hybrid

Cabling

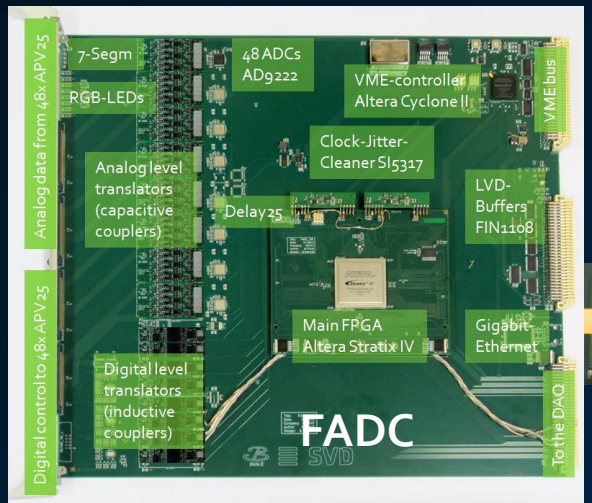

FTB

COPPER

DATCON

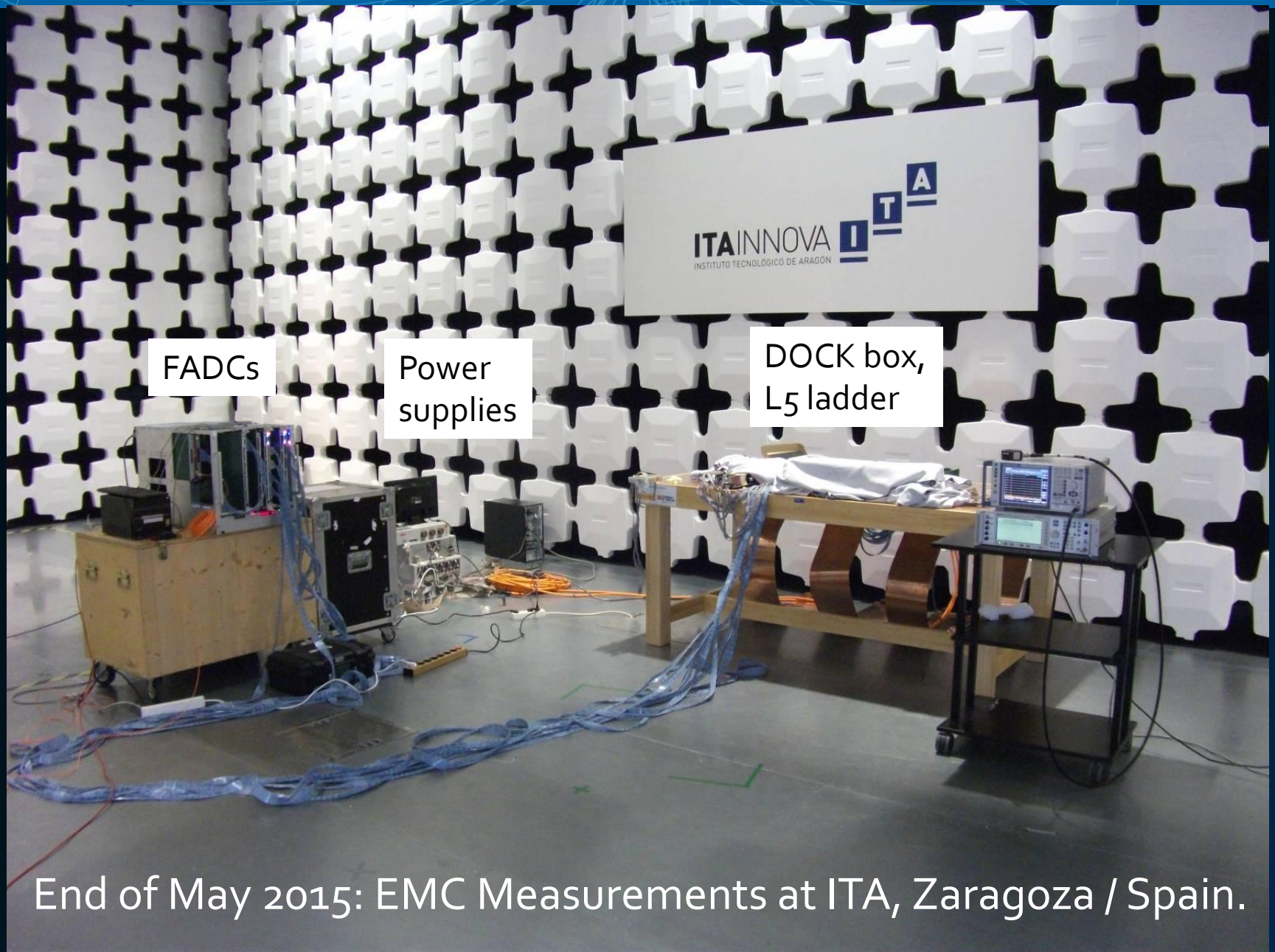

End of May 2015: EMC Measurements at ITA, Zaragoza / Spain.

Device under Test: SVD Layer 5

SVD EMC Tests – Power and Grounding Scheme

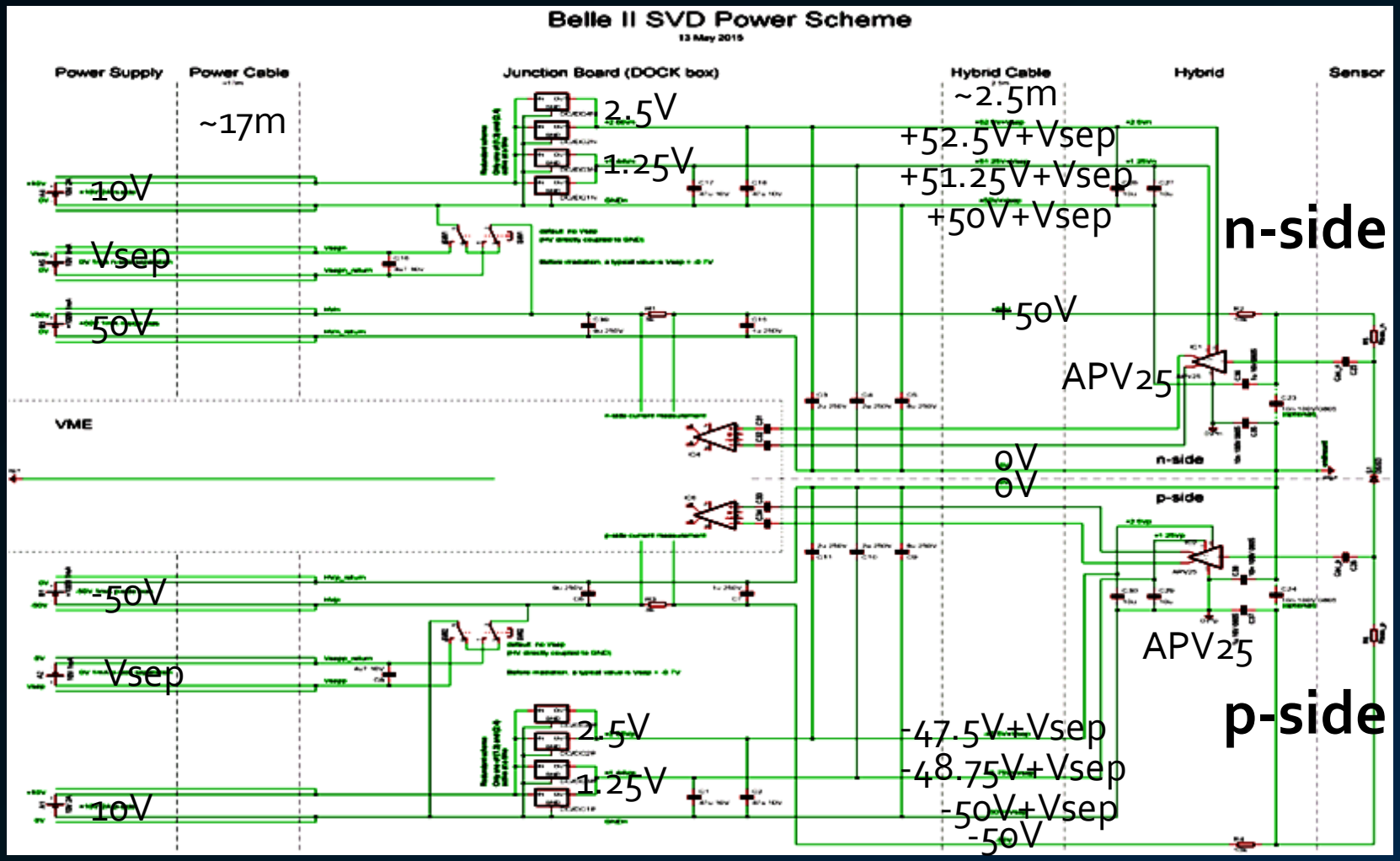

SVD EMC Tests – Power and Grounding Scheme

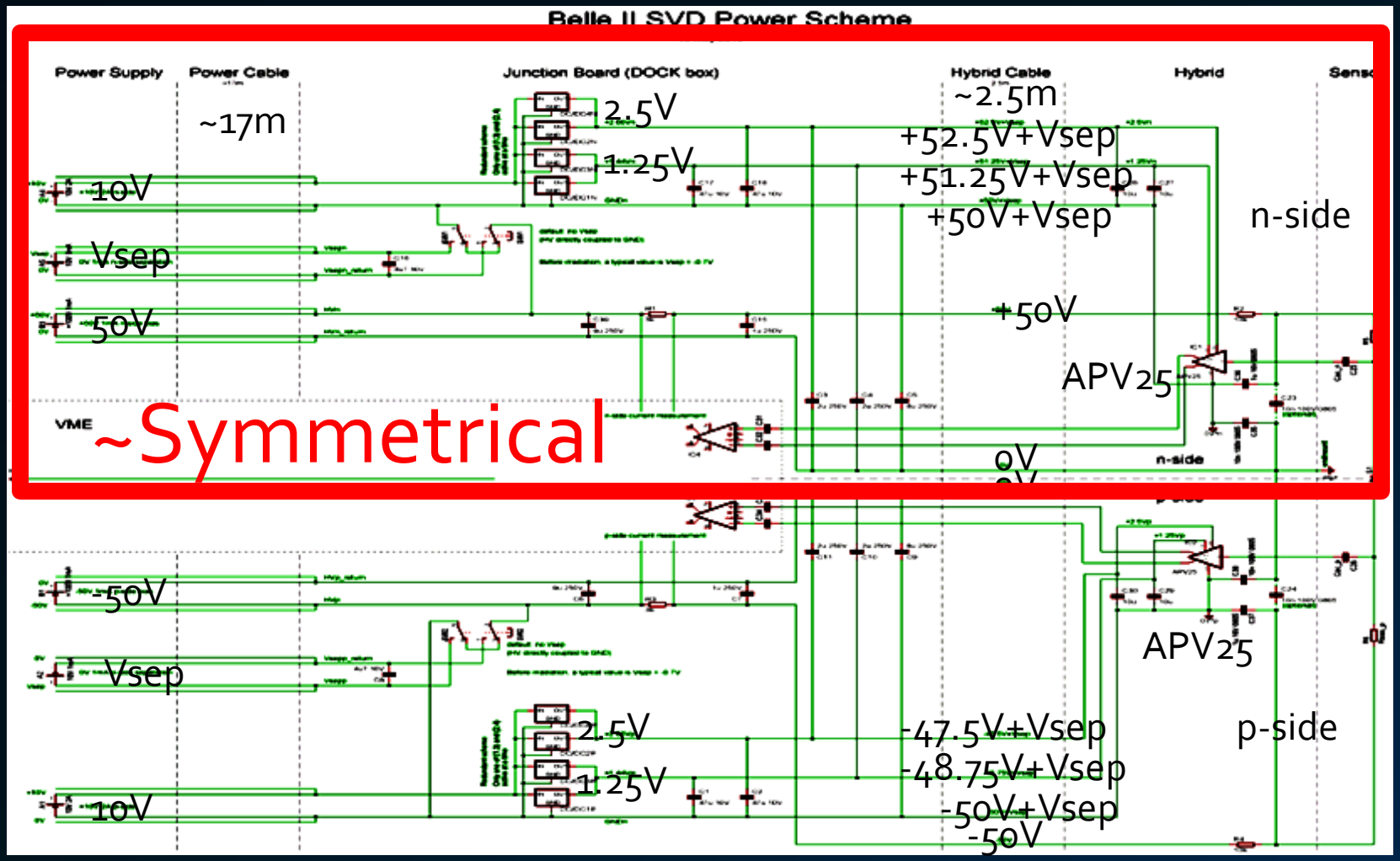

SVD EMC Tests – Power Scheme (Detail)

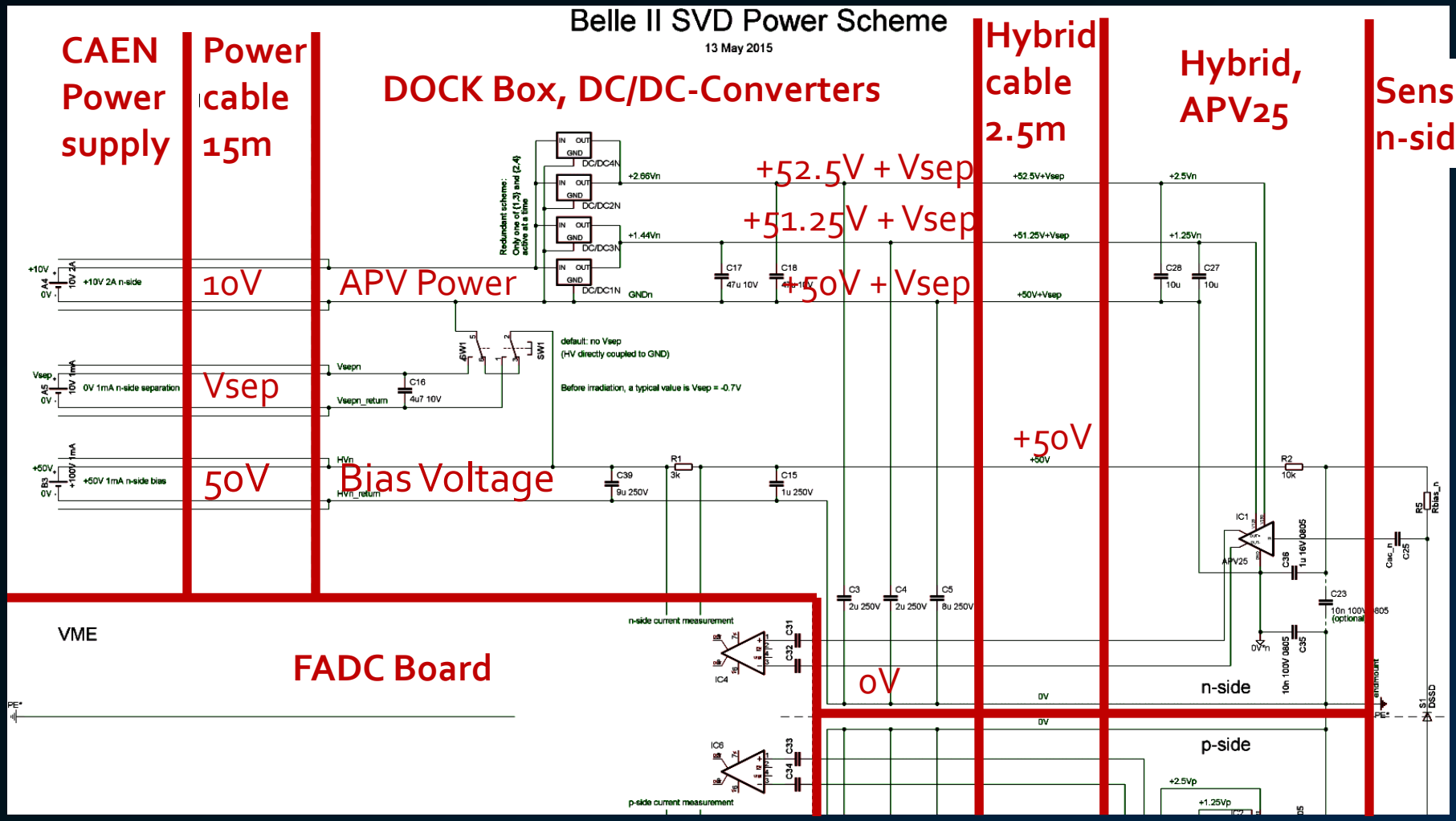

SVD EMC Tests – Power Scheme (Detail)

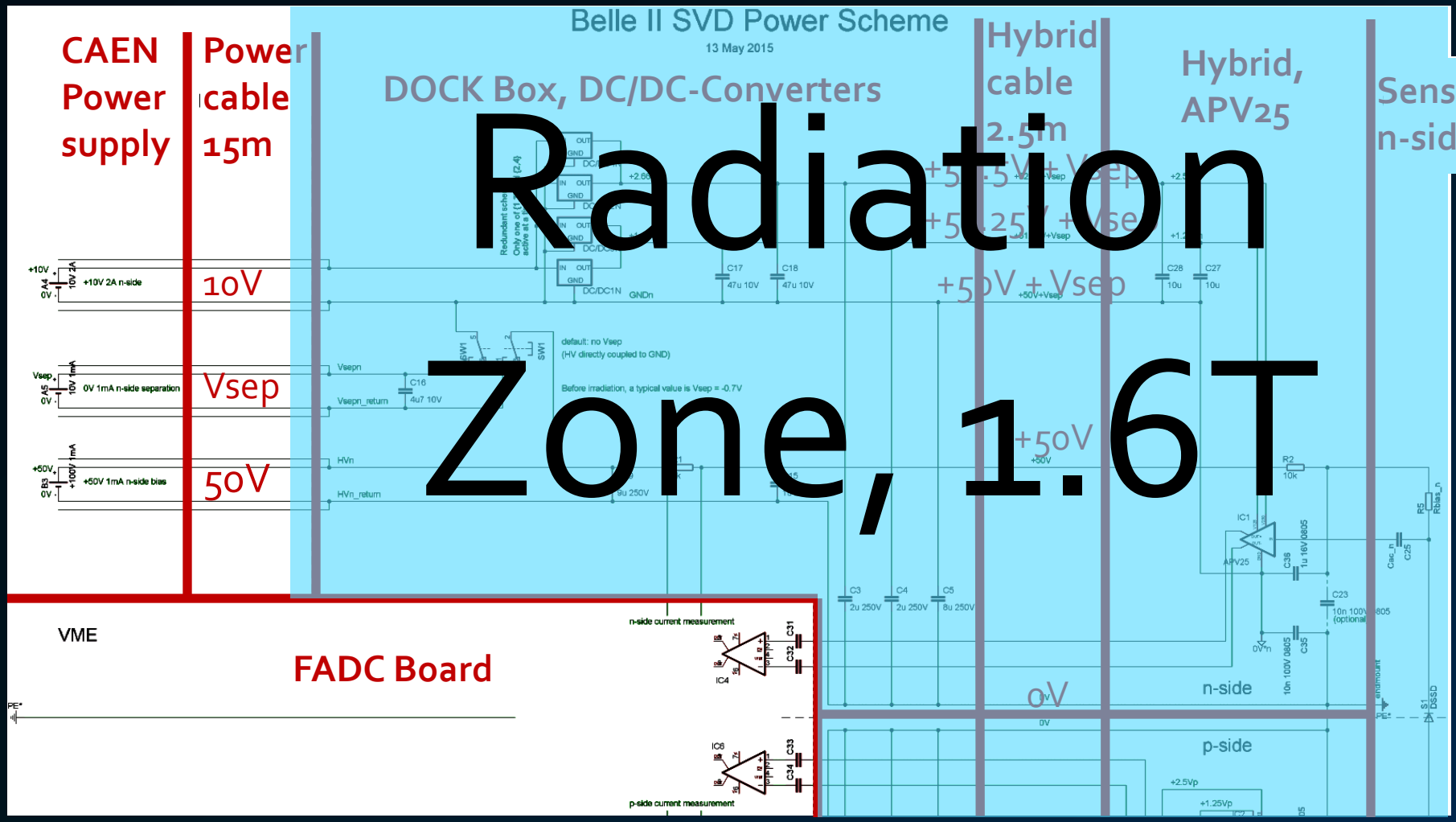

Radiation Zone, 1.6T

- Belle II - Introduction
- SVD EMC Tests
  - SVD Data Readout and Power Scheme
  - APV25 Sensitivity measurement
  - DC/DC-Sensitivity measurement
  - Emission Tests
  - First conclusion of the SVD EMC Tests
  - CAEN Power Supply issue
  - SVD Frontend Hybrid Bias Capacitor issue
- PXD Power Cable Studies
- Conclusions and Outlook

SVD EMC Tests – APV25 Sensitivity

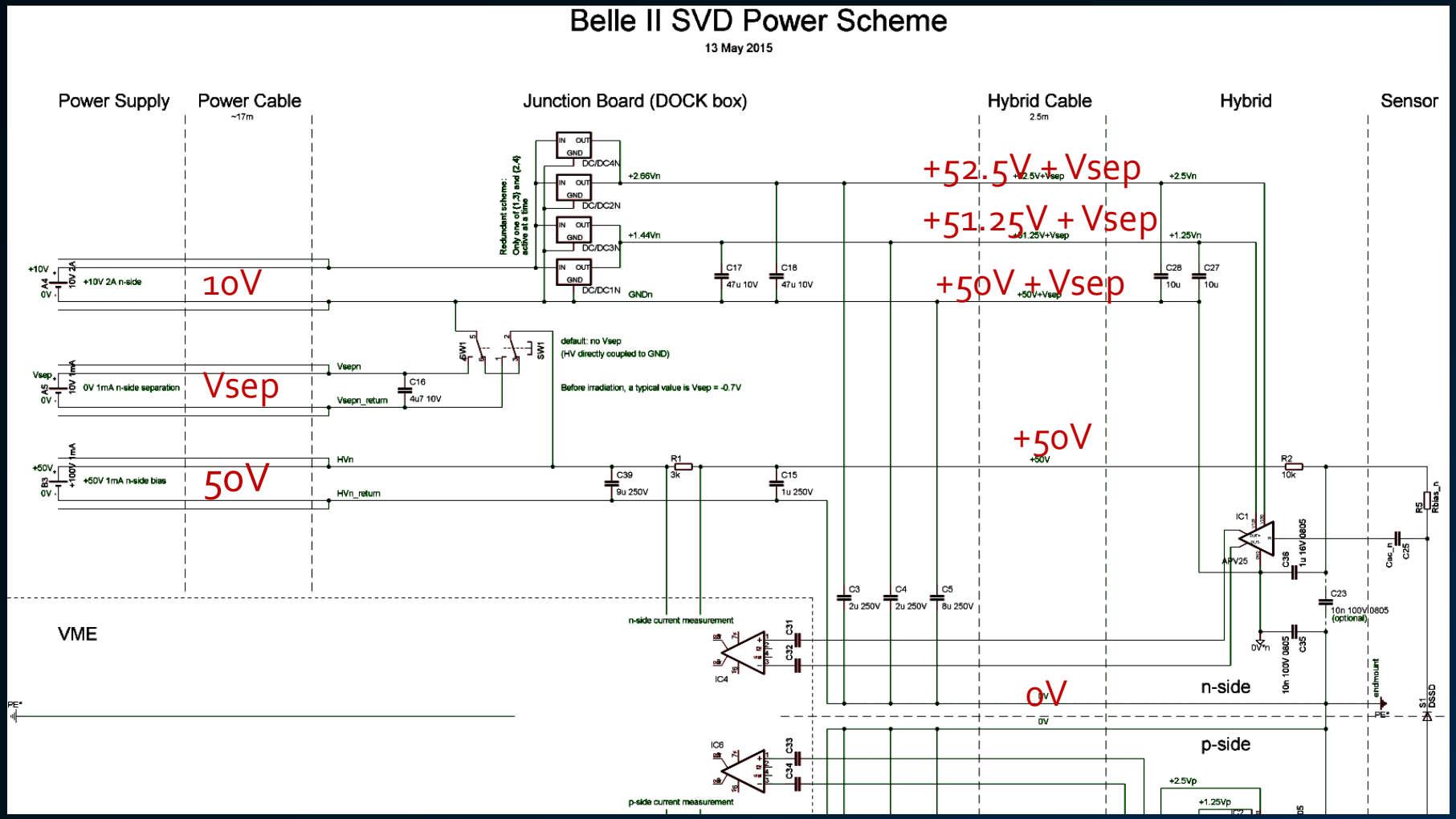

SVD EMC Tests – APV25 Sensitivity

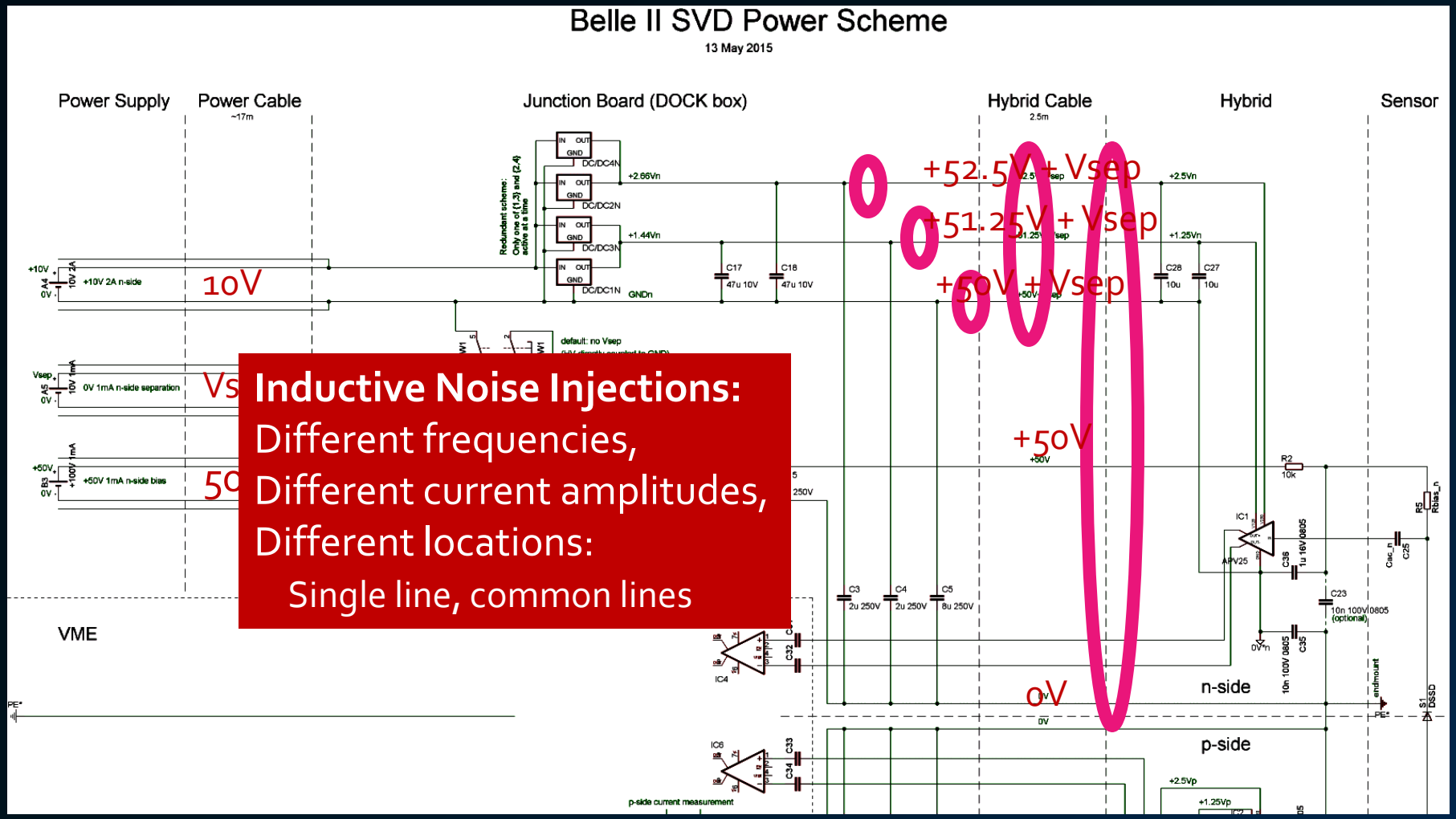

SVD EMC Tests – APV25 Sensitivity

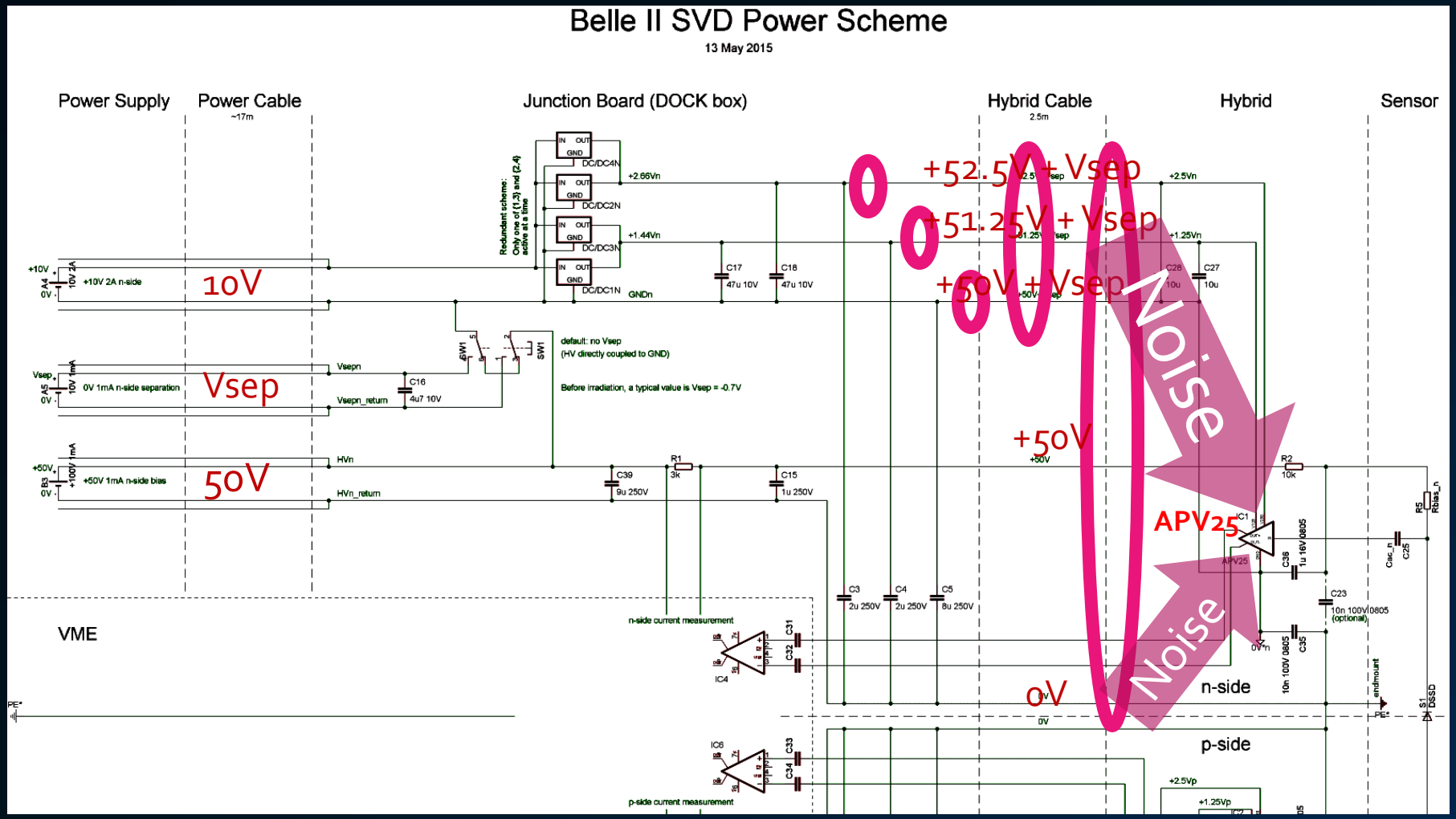

SVD EMC Tests – APV25 Sensitivity

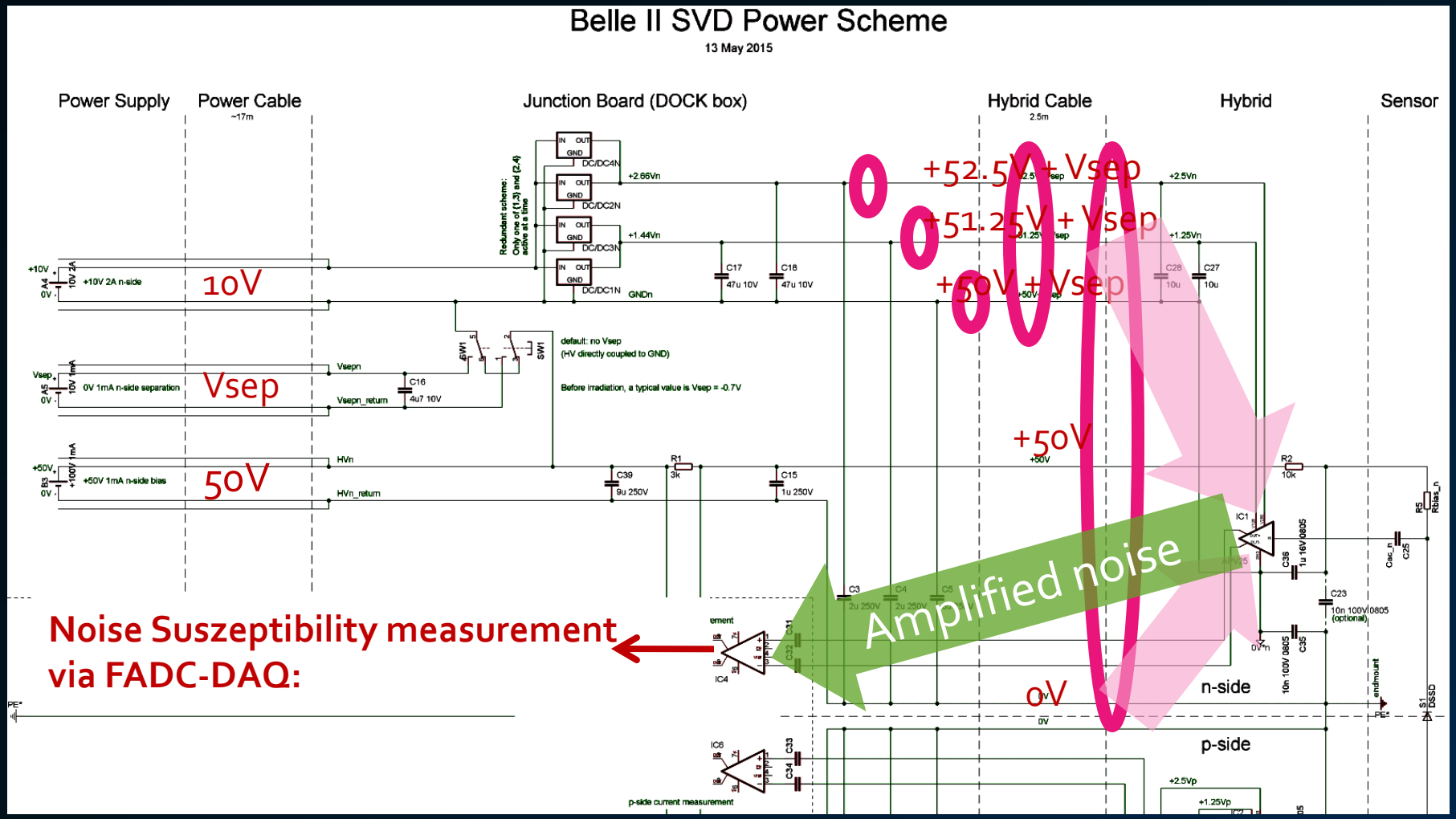

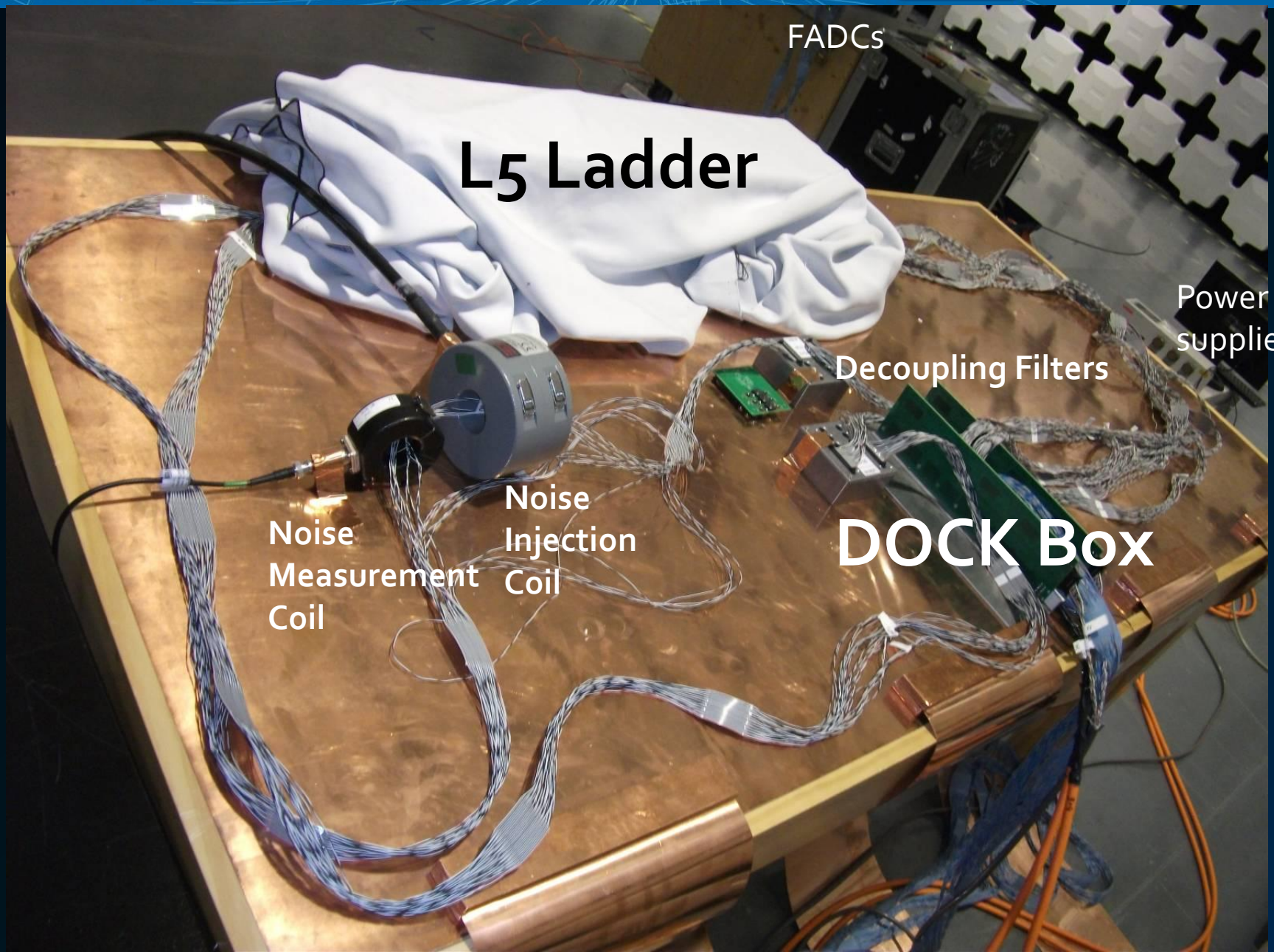
FADCs
L5 Ladder
Power supplies
Decoupling Filters
Noise Measurement Coil
Noise Injection Coil
DOCK Box

SVD EMC Tests – APV25 Sensitivity

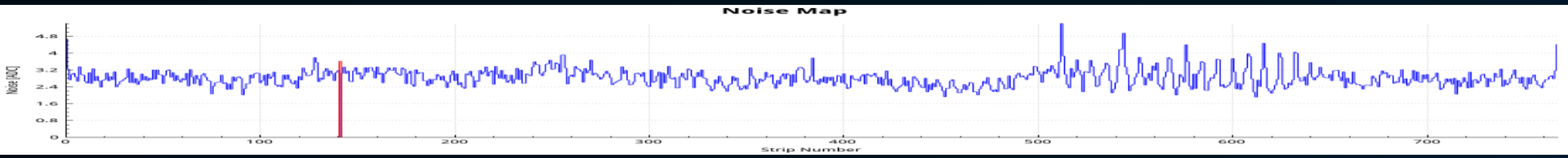

backward sensor, p-side, without inducted noise

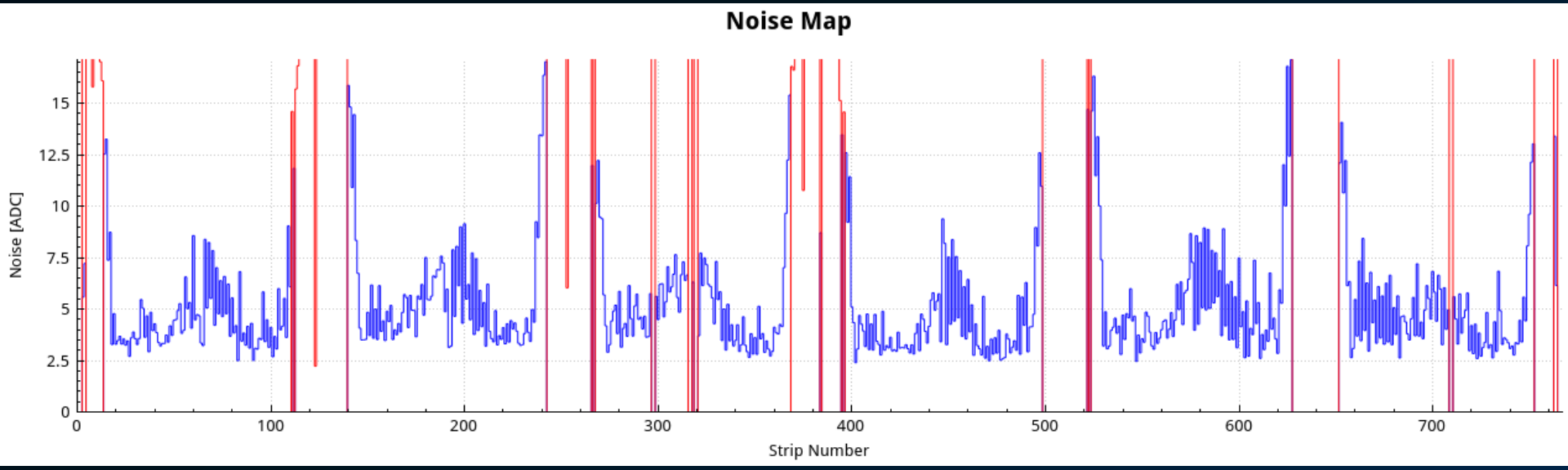

backward sensor, p-side, with 0.5mA @ 200kHz of inducted CM Powerlines noise

Data of all SVD readouts can be seen at http://elog.hephy.at/electronics/

- Belle II - Introduction
- **SVD EMC Tests**
  - SVD Data Readout and Power Scheme
  - APV25 Sensitivity measurement
  - **DC/DC-Sensitivity measurement**
  - Emission Tests
  - First conclusion of the SVD EMC Tests
  - CAEN Power Supply issue
  - SVD Frontend Hybrid Bias Capacitor issue
- PXD Power Cable Studies
- Conclusions and Outlook

SVD EMC Tests – DC/DC-Sensitivity

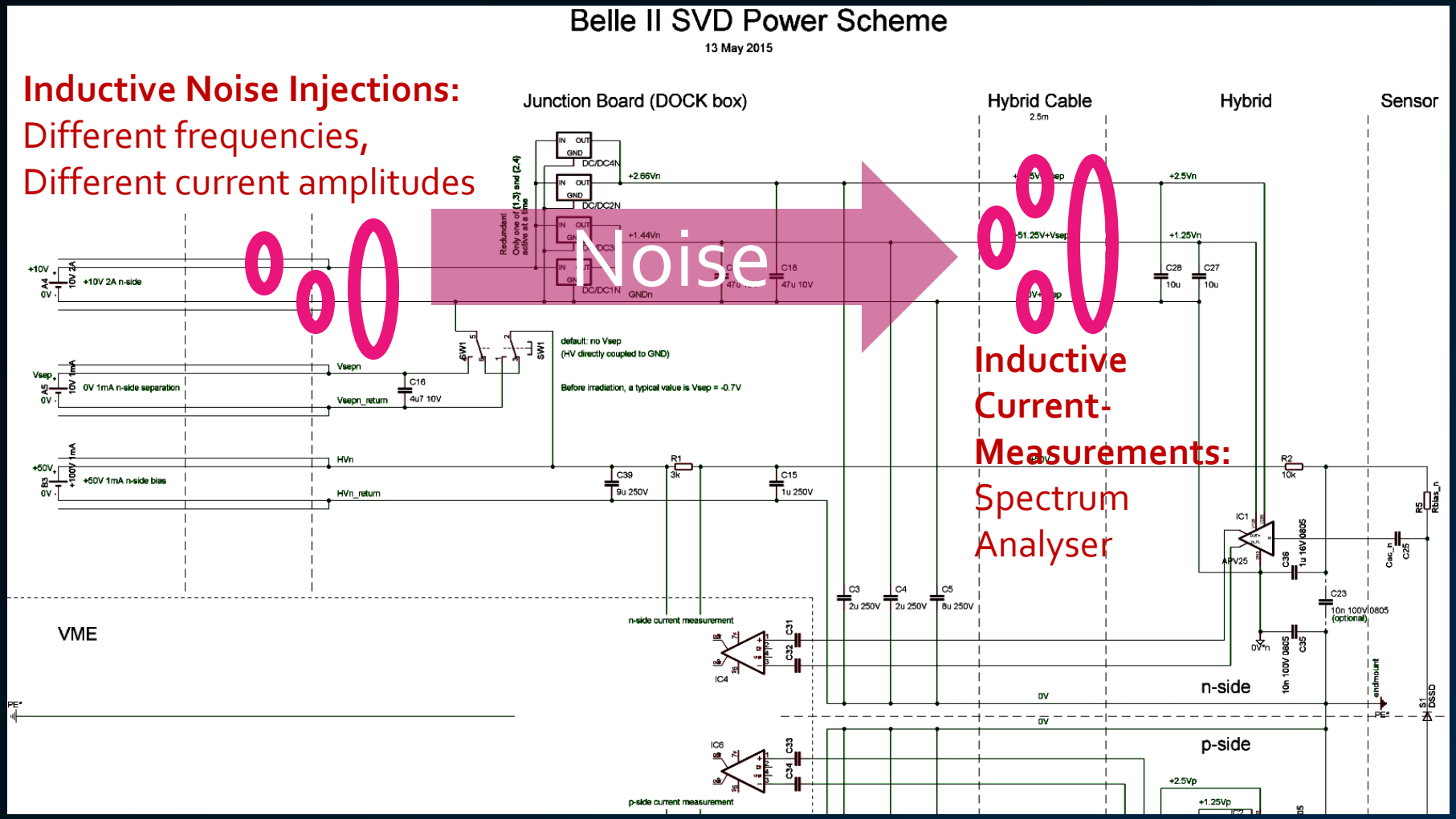

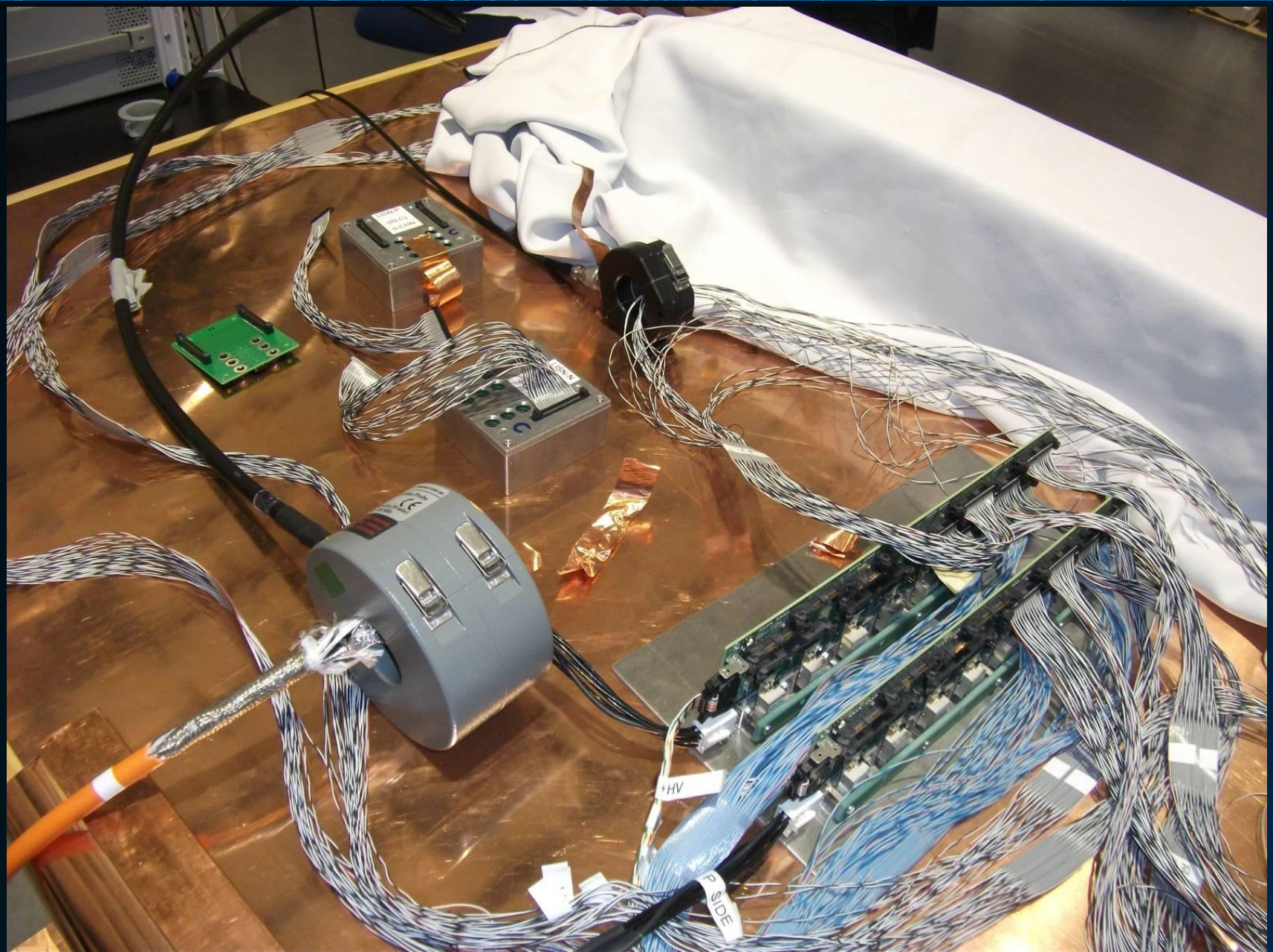
+HV
P SIDE

- Belle II - Introduction
- **SVD EMC Tests**
  - SVD Data Readout and Power Scheme
  - APV25 Sensitivity measurement
  - DC/DC-Sensitivity measurement
  - **Emission Tests**
  - First conclusion of the SVD EMC Tests
  - CAEN Power Supply issue
  - SVD Frontend Hybrid Bias Capacitor issue
- PXD Power Cable Studies
- Conclusions and Outlook

SVD EMC Tests – DC/DC conducted Emission

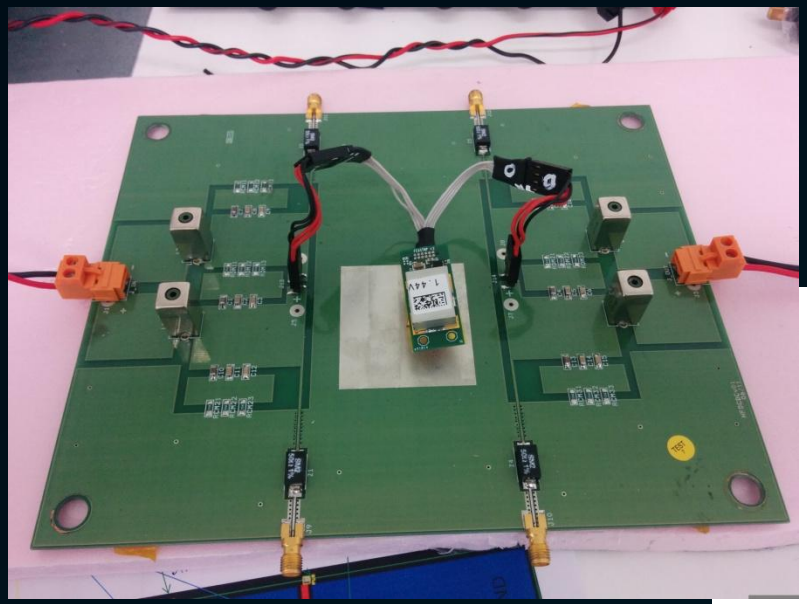

Full characterization for 100kHz…30MHz, Load 1.5Ω, Input 10V:

- 1.44V DC-DC
- 2.88V DC-DC
- Common Mode
- Differential Mode
- Input Current Plots
- Output Currents Plots

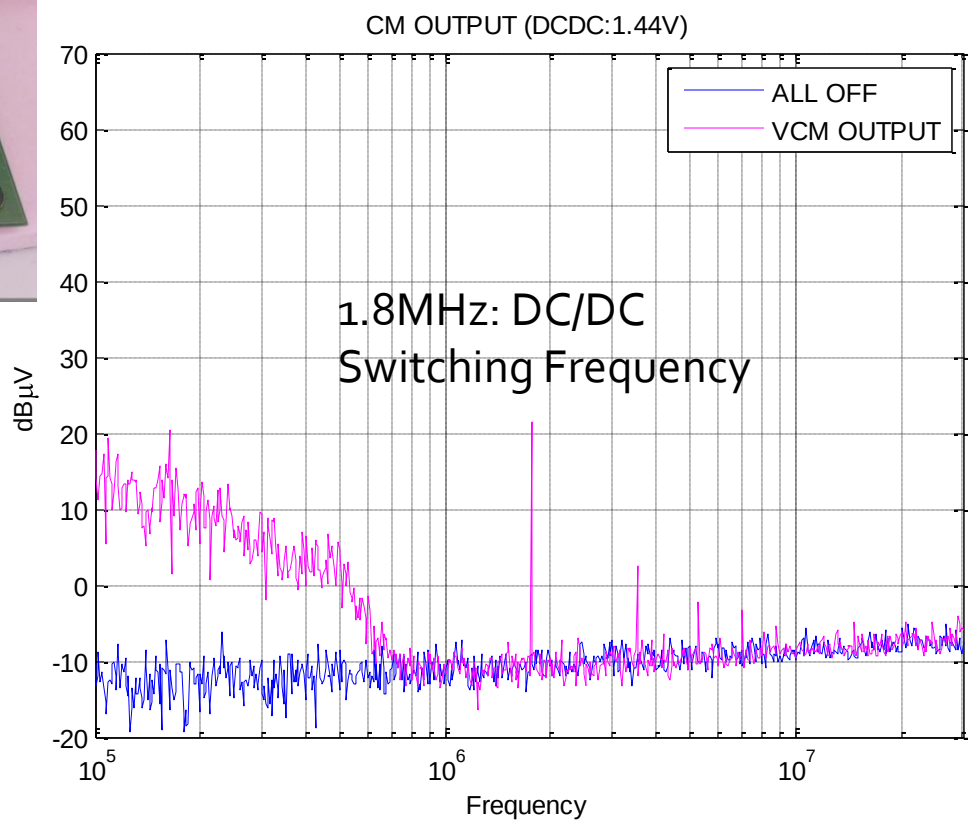

SVD Electric and Magnetic Emissions

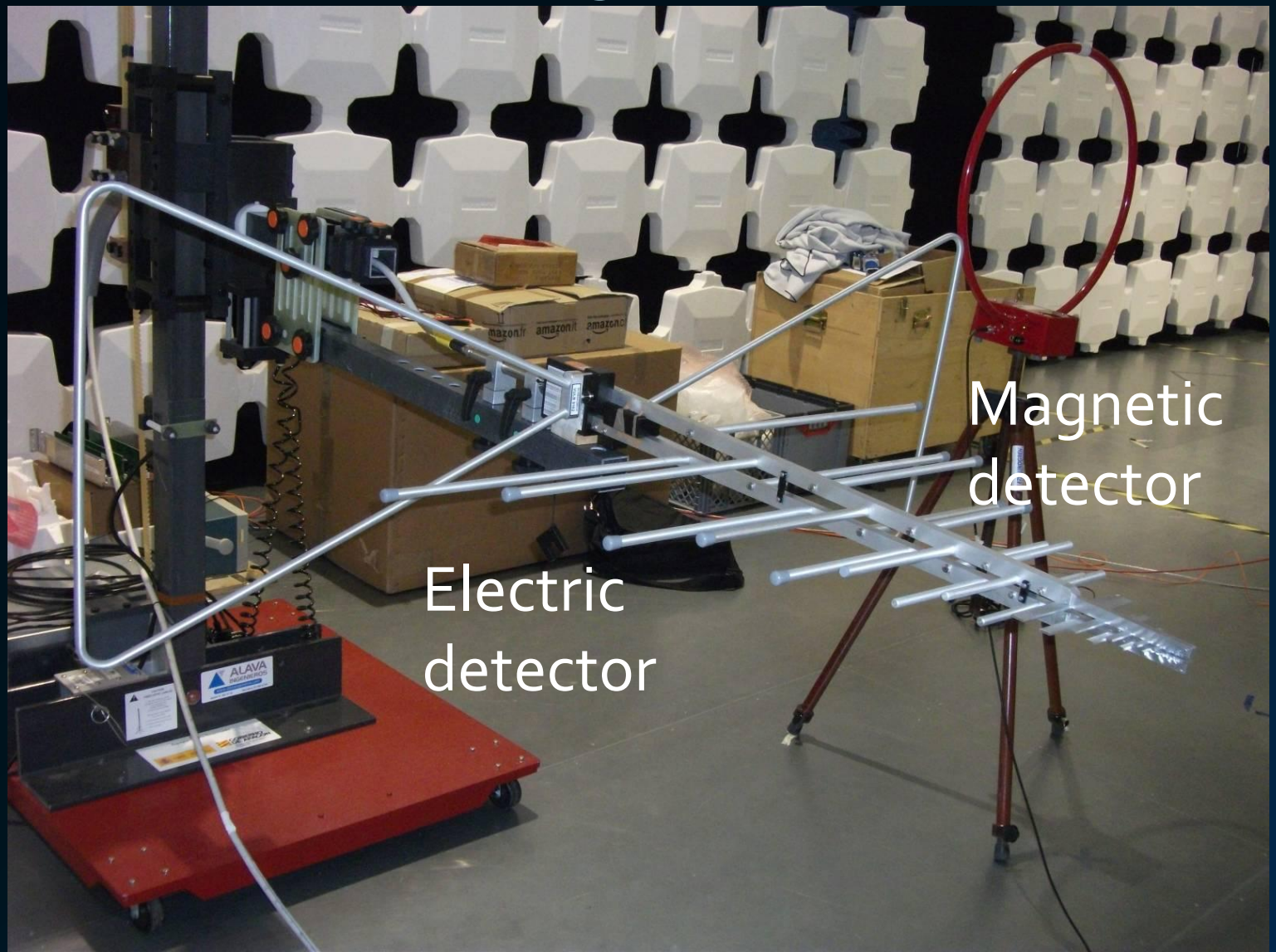

Magnetic Field emission (3m distance). Far below any level to be concerned of.

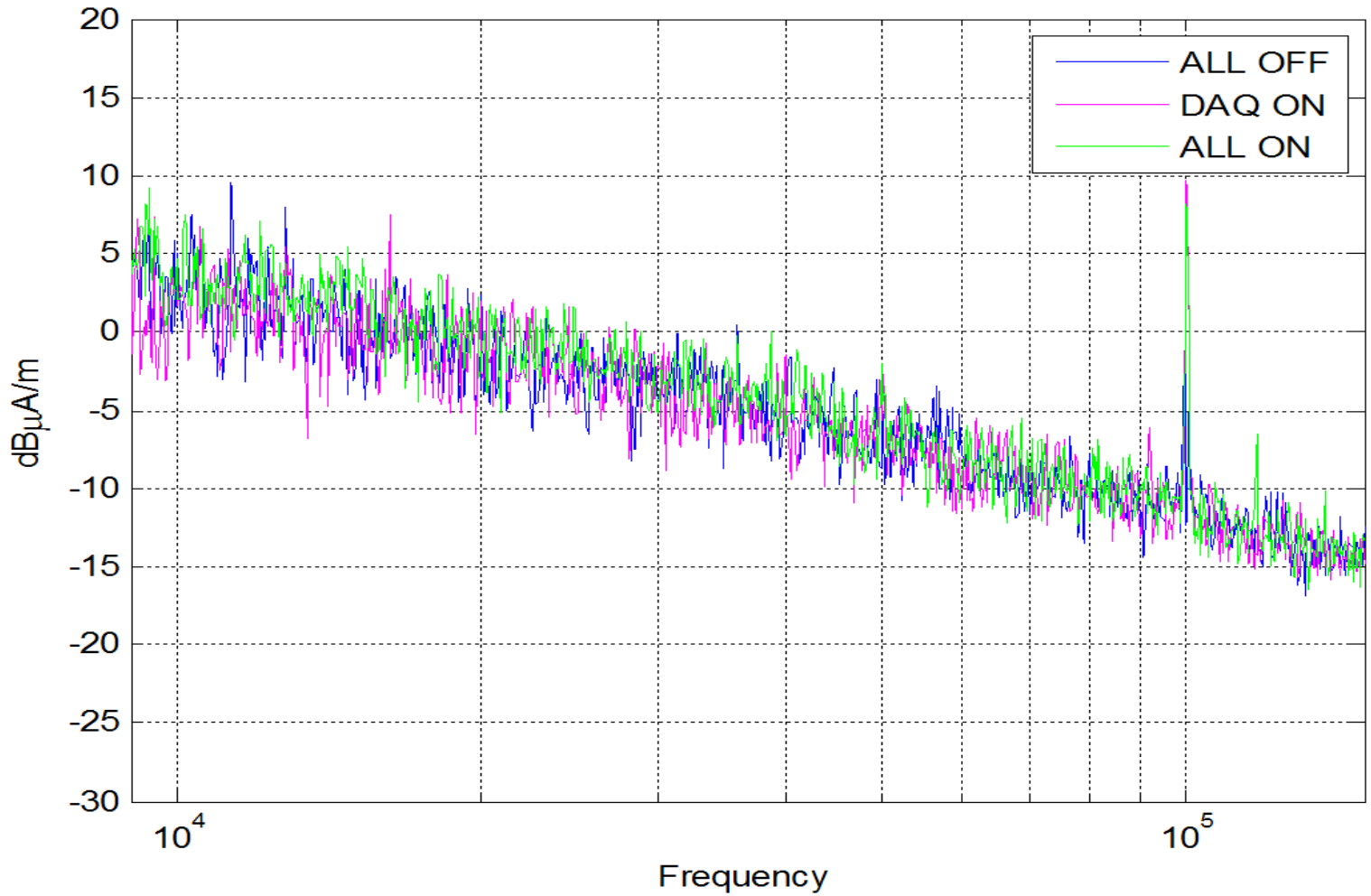

Electrical emission (3m distance). DAQ dominates, but also very low.

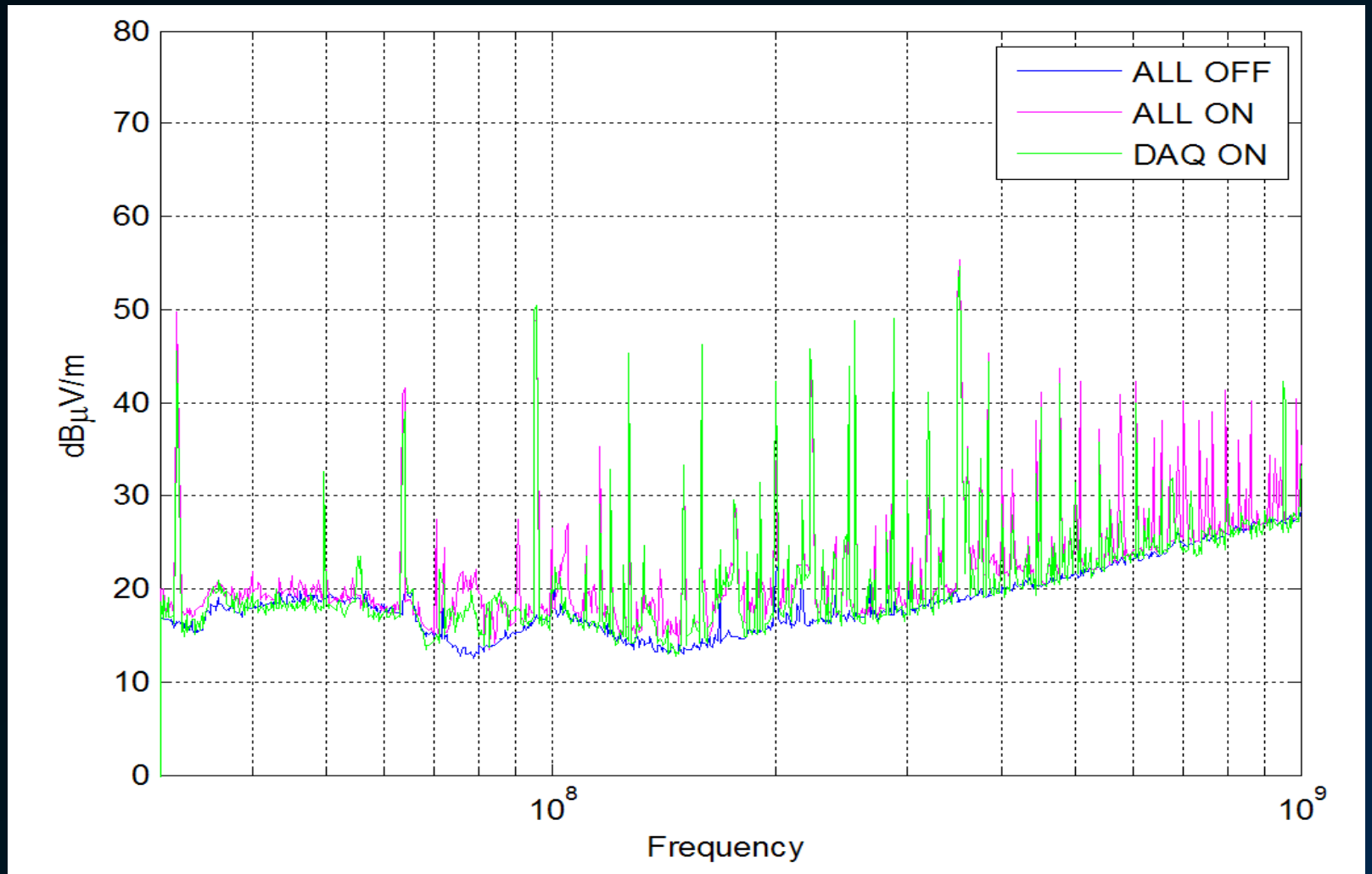

Near magnetic Field emission of the cables (2cm, 4cm, 6cm)

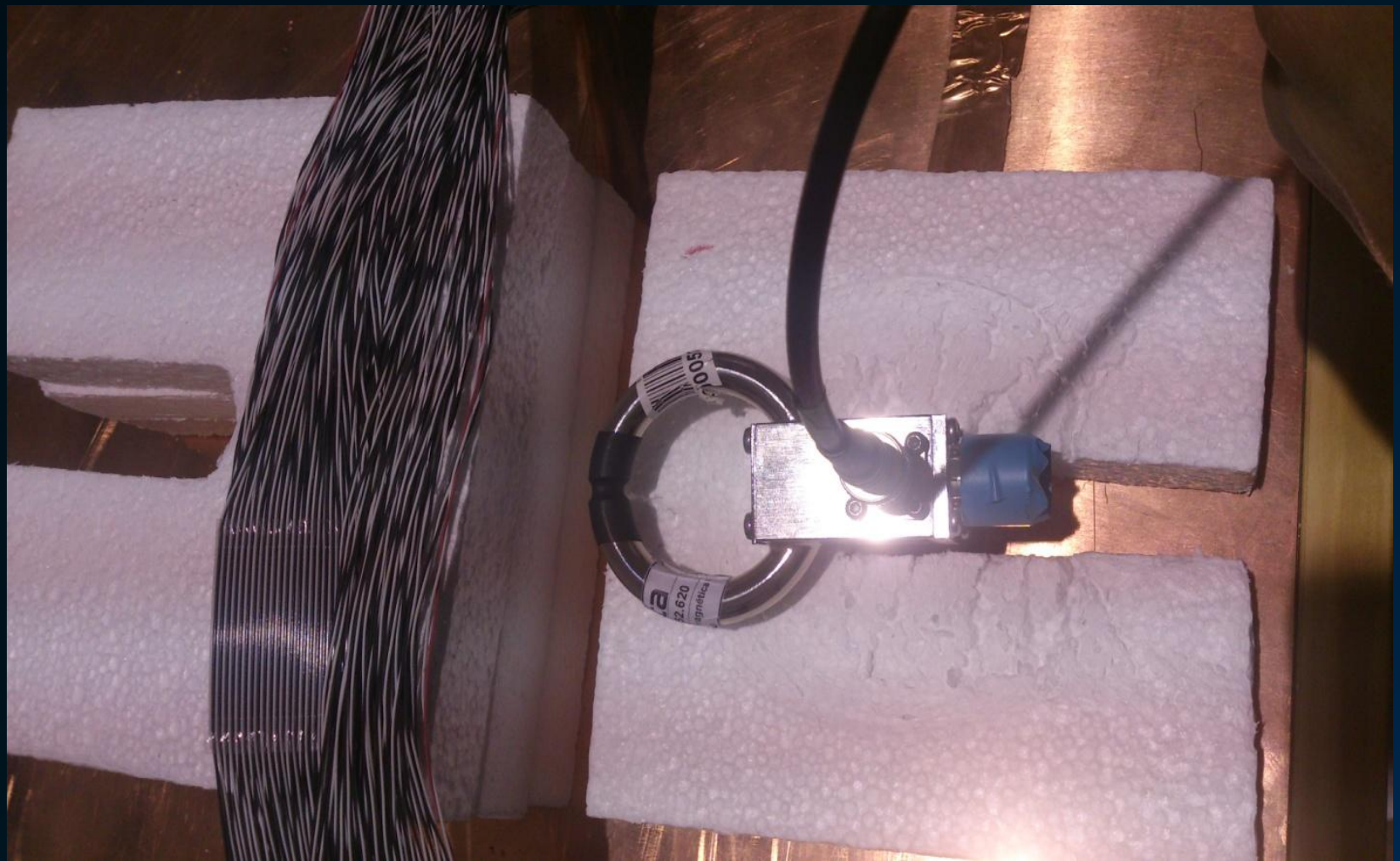

Near magnetic Field emission of the cables (6cm). Very low emission.

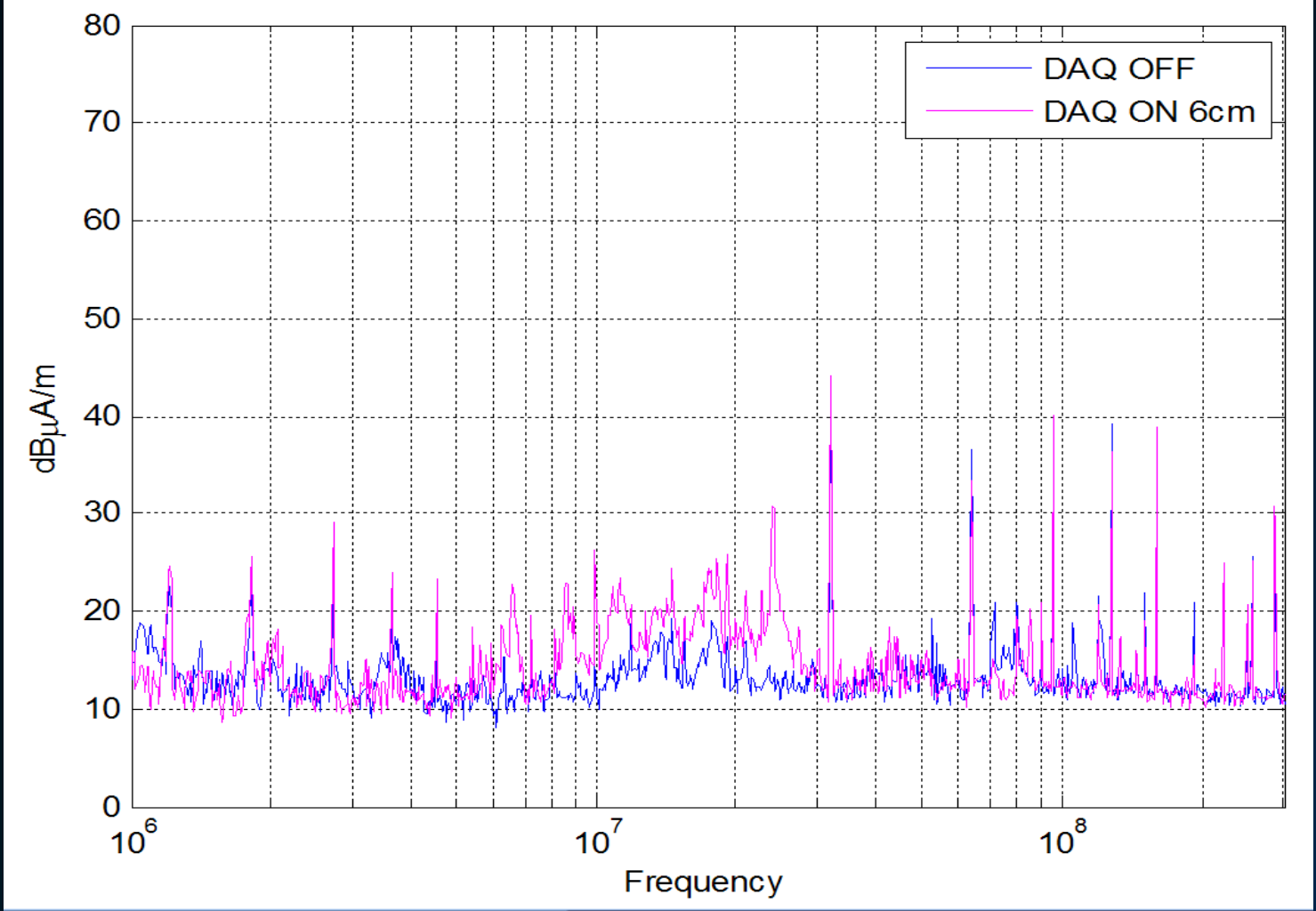

- Belle II - Introduction
- **SVD EMC Tests**
  - SVD Data Readout and Power Scheme
  - APV25 Sensitivity measurement
  - DC/DC-Sensitivity measurement
  - Emission Tests
  - **First conclusion of the SVD EMC Tests**
  - CAEN Power Supply issue
  - SVD Frontend Hybrid Bias Capacitor issue
- PXD Power Cable Studies
- Conclusions and Outlook

SVD EMC Tests – First conclusions

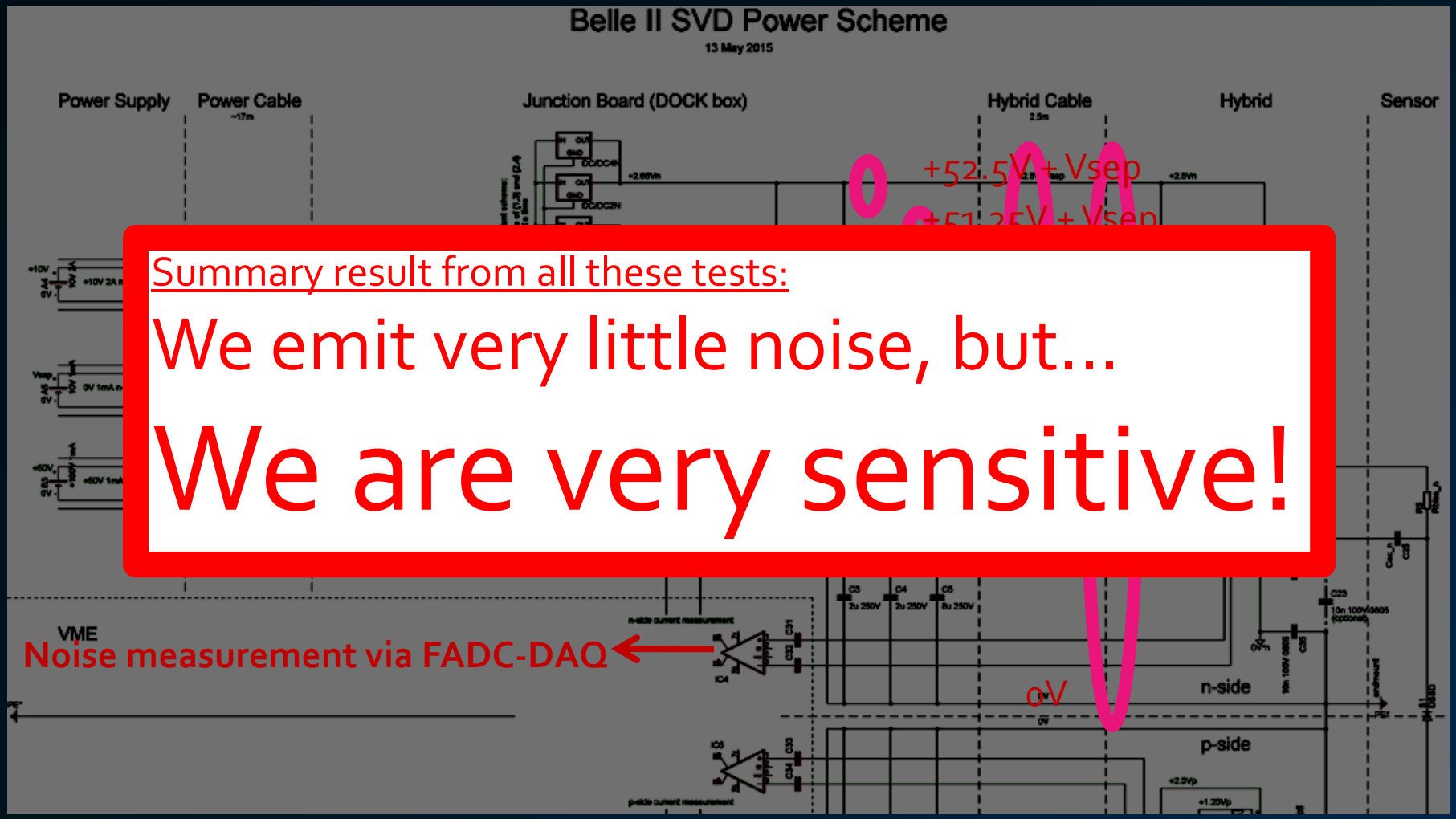

Summary result from all these tests:

We emit very little noise, but…

We are very sensitive!

- Belle II - Introduction
- SVD EMC Tests
  - SVD Data Readout and Power Scheme
  - APV25 Sensitivity measurement
  - DC/DC-Sensitivity measurement
  - Emission Tests
  - First conclusion of the SVD EMC Tests
  - CAEN Power Supply issue
  - SVD Frontend Hybrid Bias Capacitor issue
- PXD Power Cable Studies
- Conclusions and Outlook

SVD EMC Tests – CAEN Supply

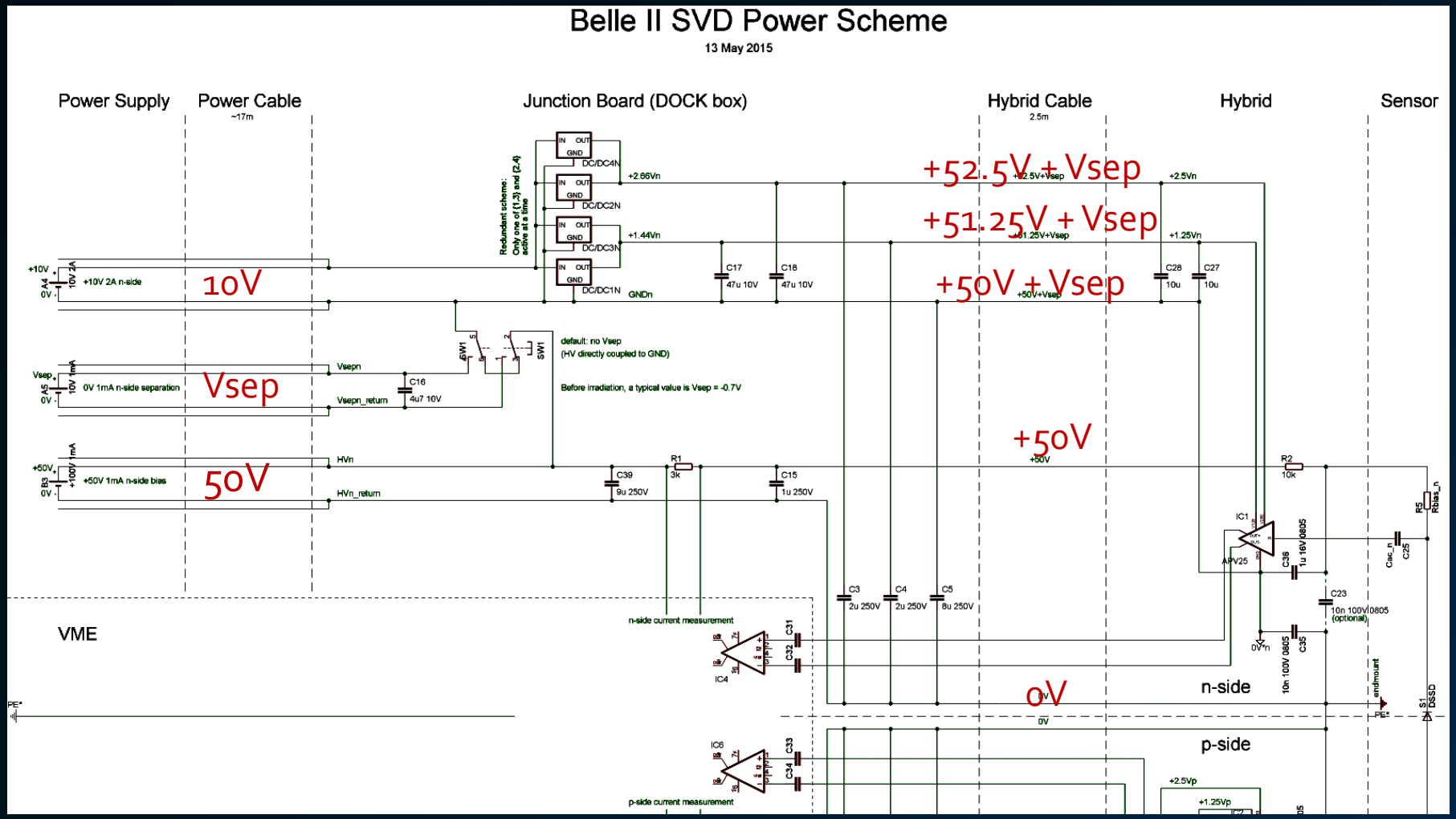

SVD EMC Tests – CAEN Supply

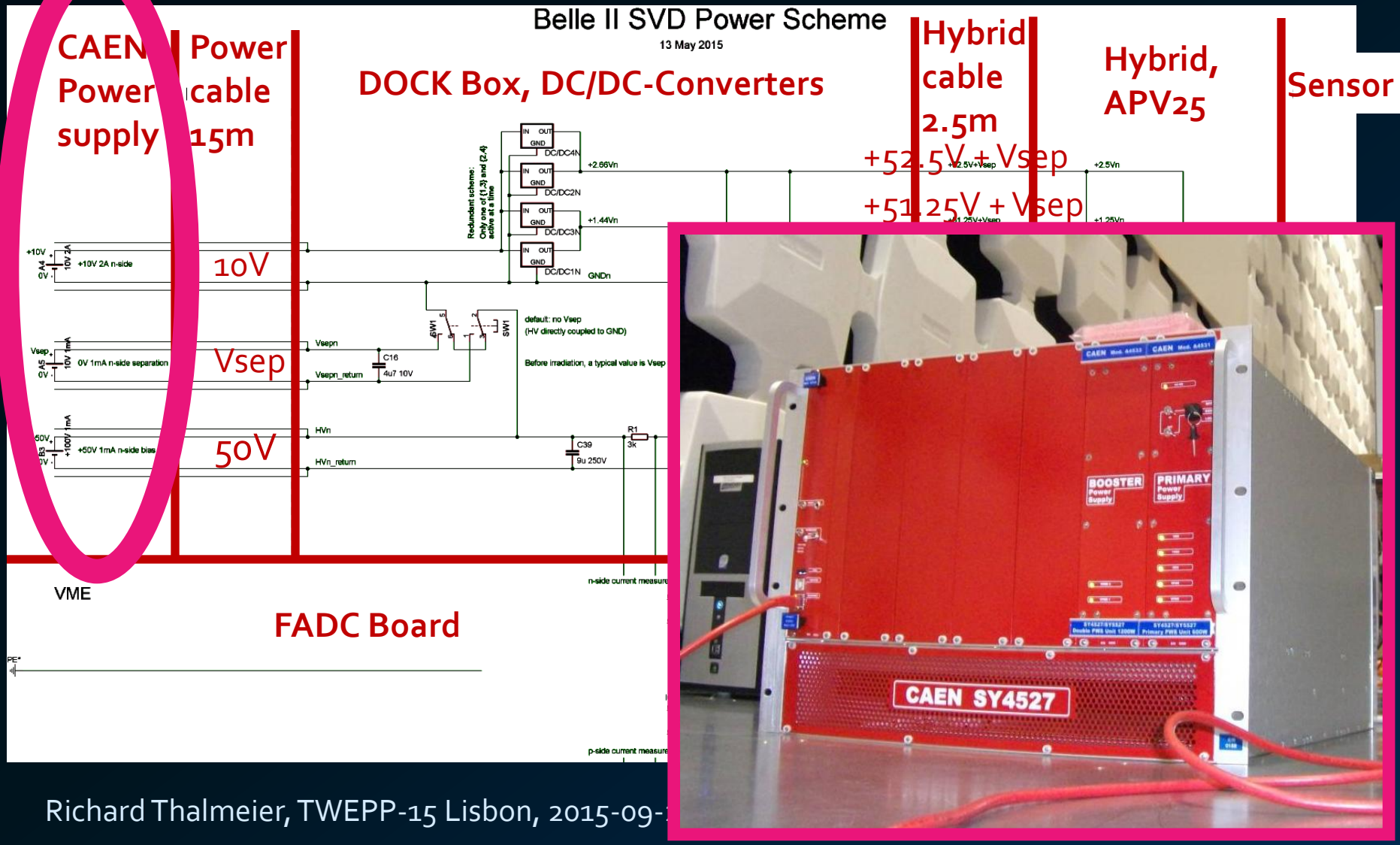

SVD EMC Tests – CAEN Supply

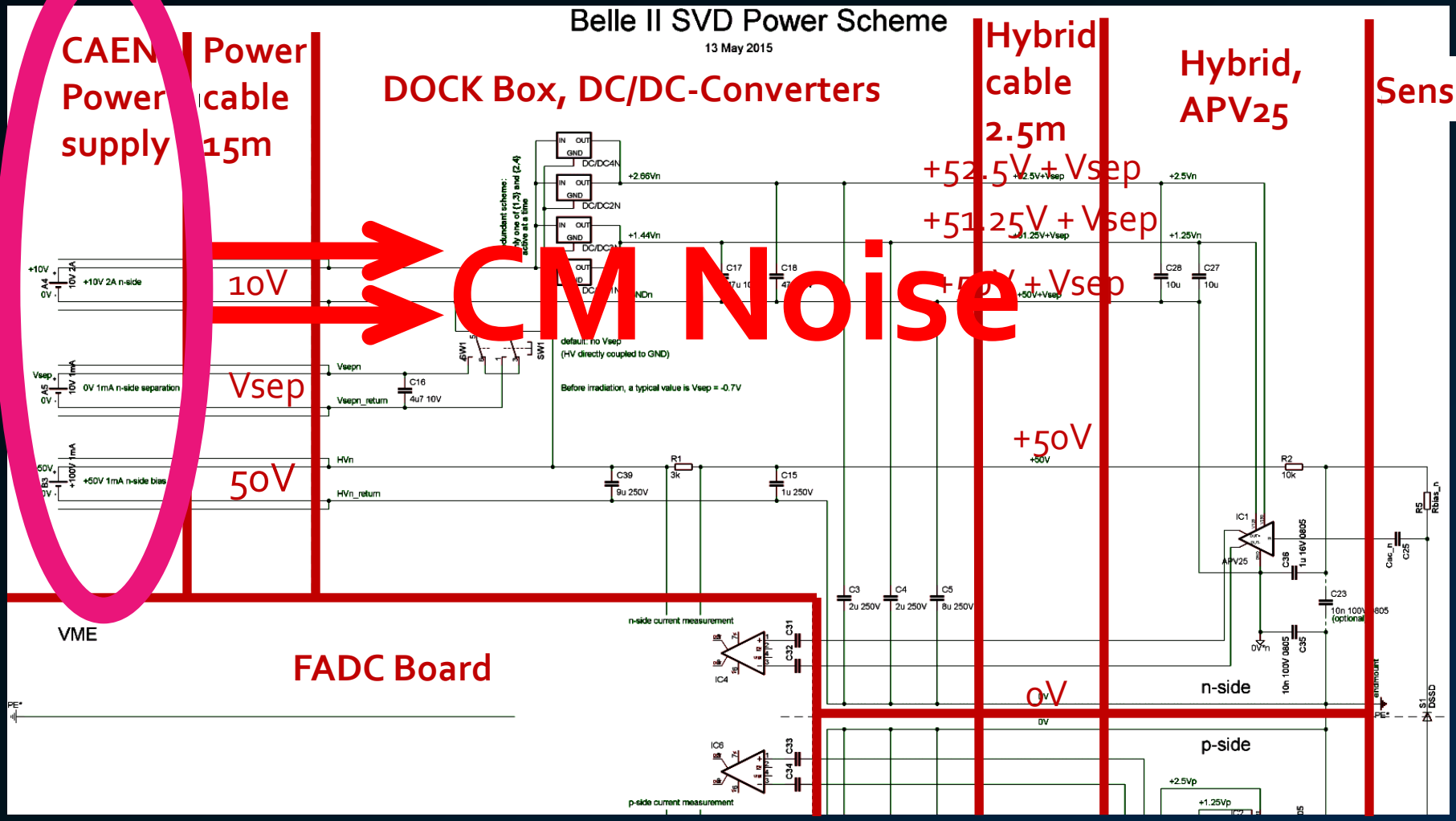

FADC System starts to struggle at 0.5mA.
CAEN-Supply: Common Mode Noise @10V: 315kHz, >4mA!
Issue has been cured by adding Filters into the CAEN-Supplies

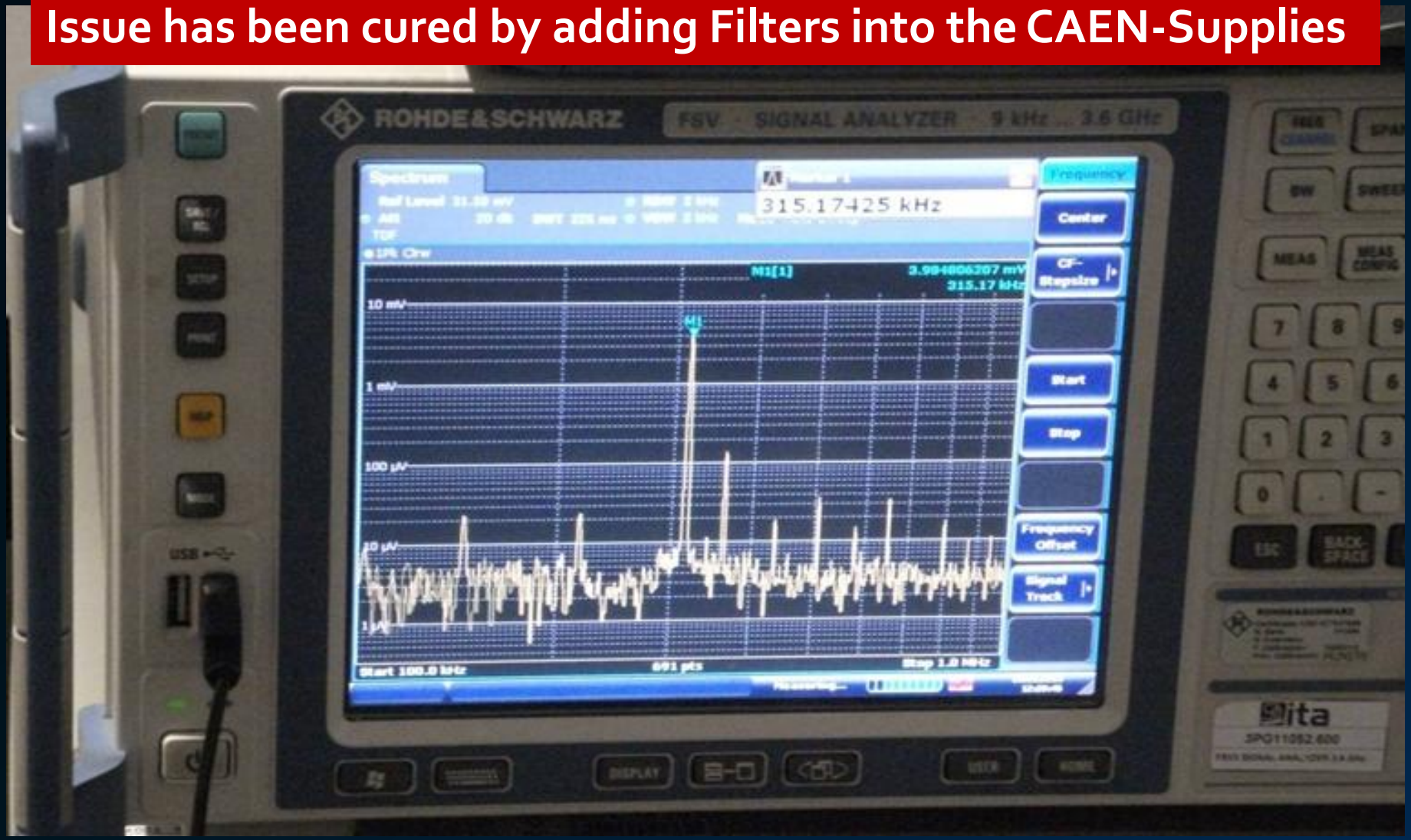

- Belle II - Introduction
- **SVD EMC Tests**
  - SVD Data Readout and Power Scheme
  - APV25 Sensitivity measurement
  - DC/DC-Sensitivity measurement
  - Emission Tests
  - First conclusion of the SVD EMC Tests
  - CAEN Power Supply issue
  - **SVD Frontend Hybrid Bias Capacitor issue**
- PXD Power Cable Studies
- Conclusions and Outlook

SVD EMC Tests – Bias Capacitor

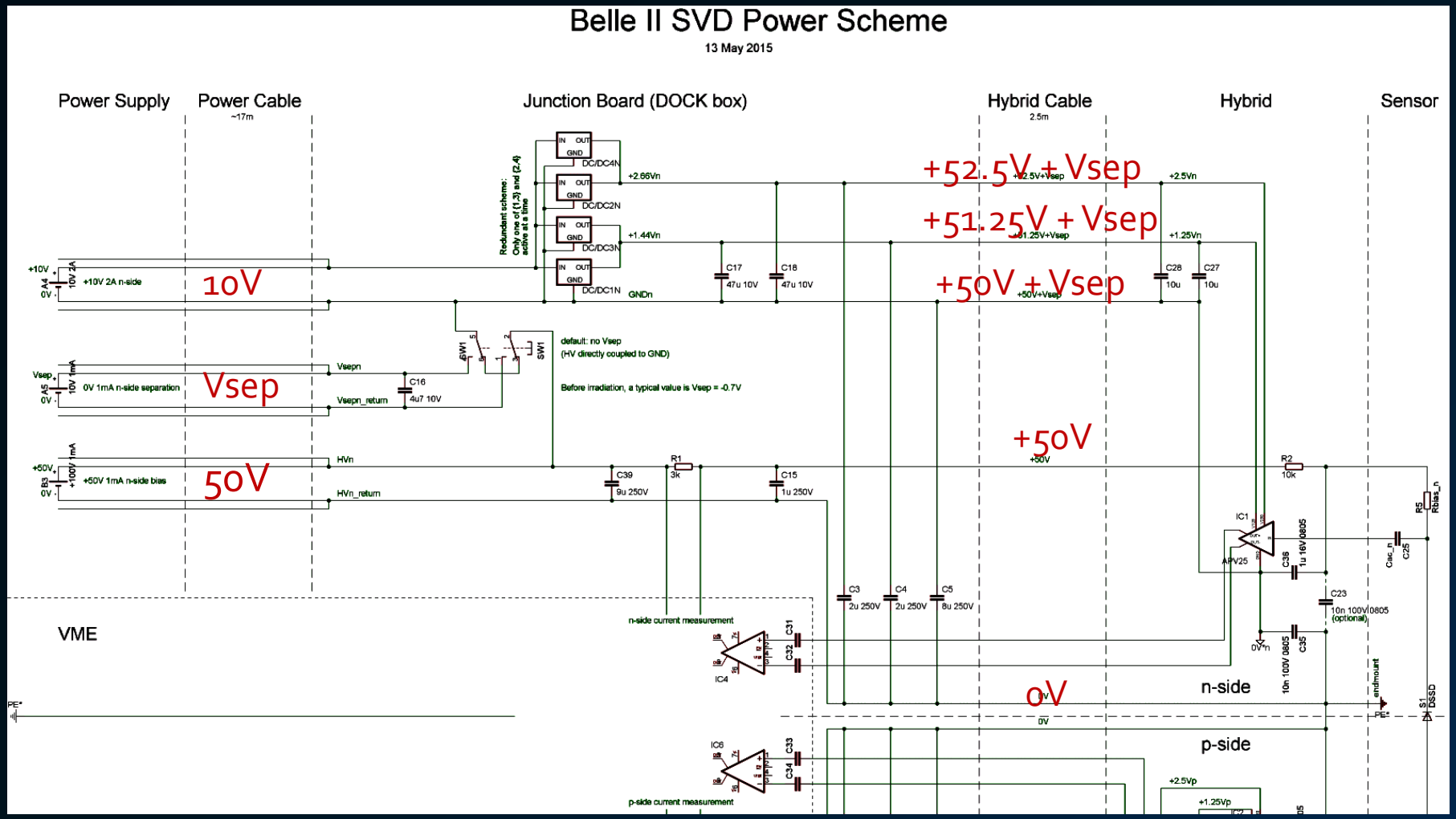

SVD EMC Tests – Bias Capacitor

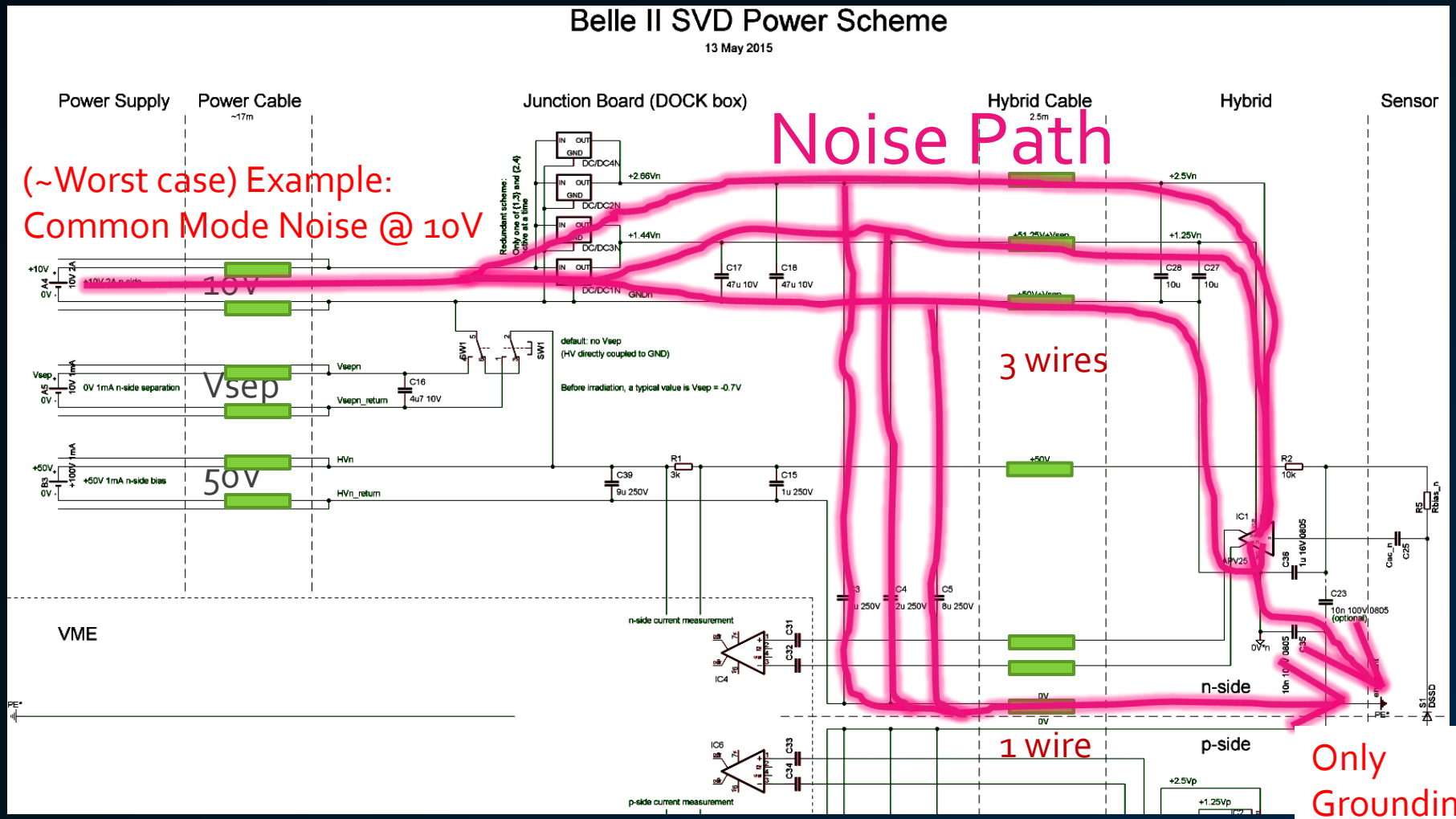

SVD EMC Tests – Bias Capacitor

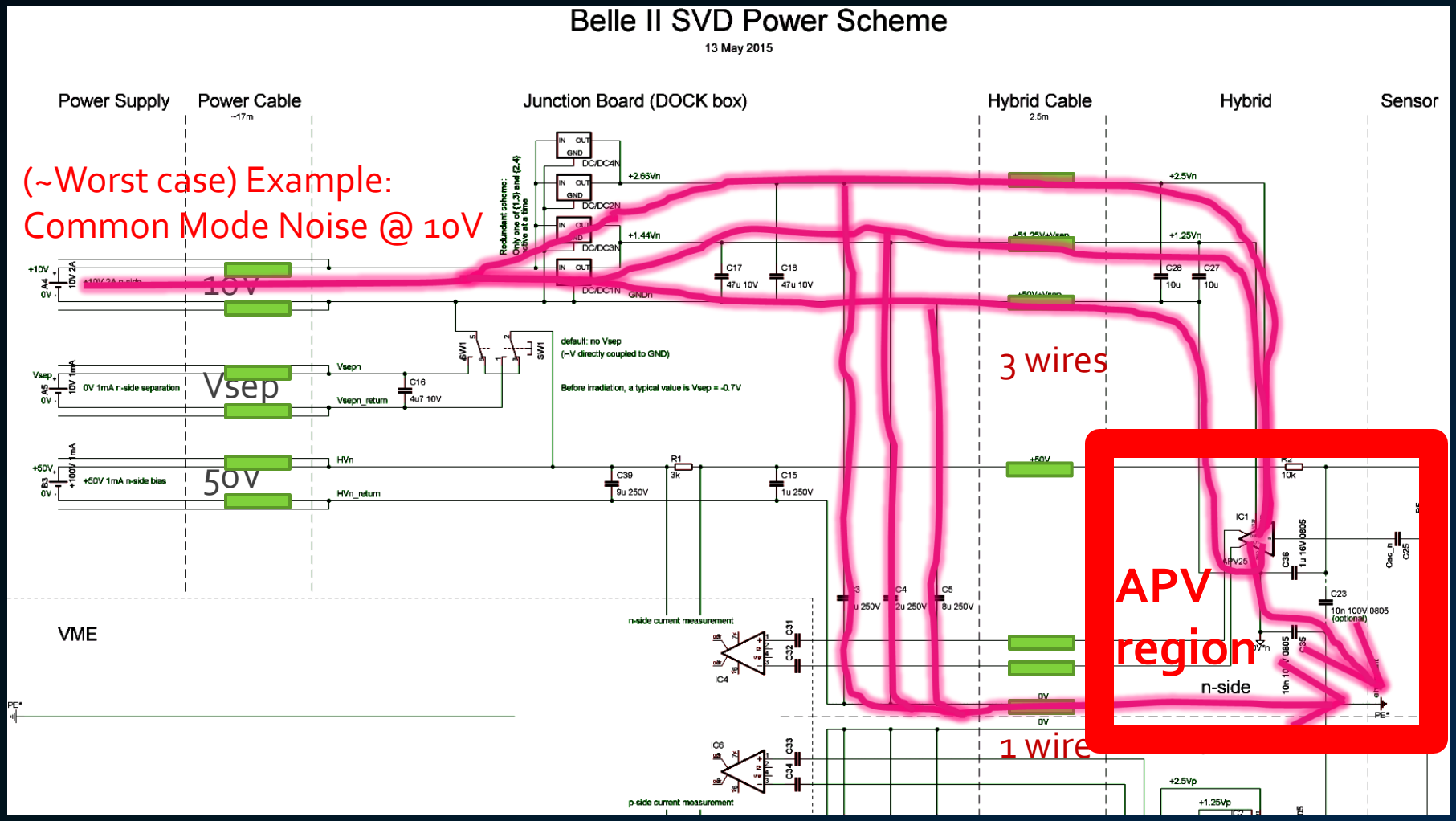

SVD EMC Tests – Bias Capacitor

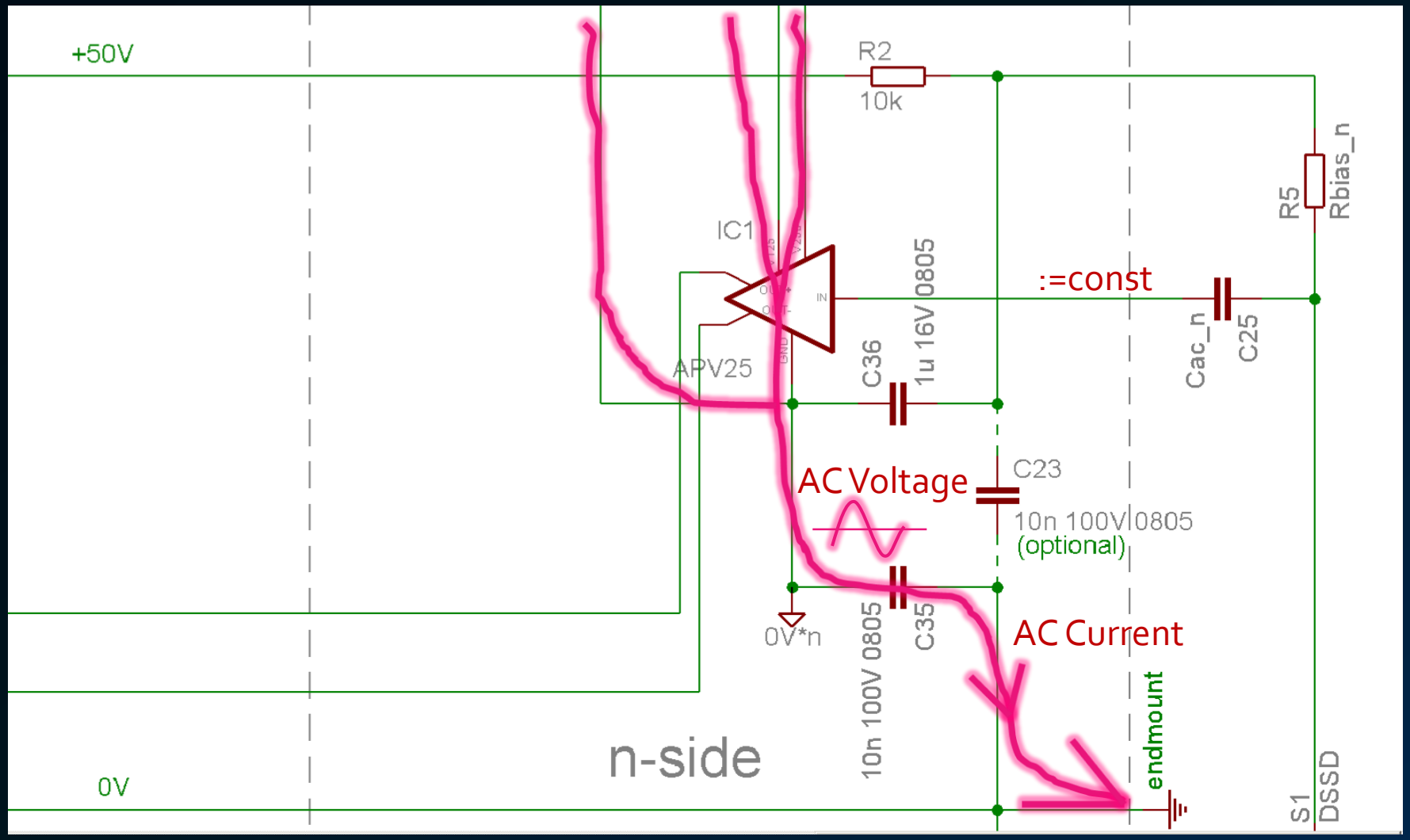

SVD EMC Tests – Bias Capacitor

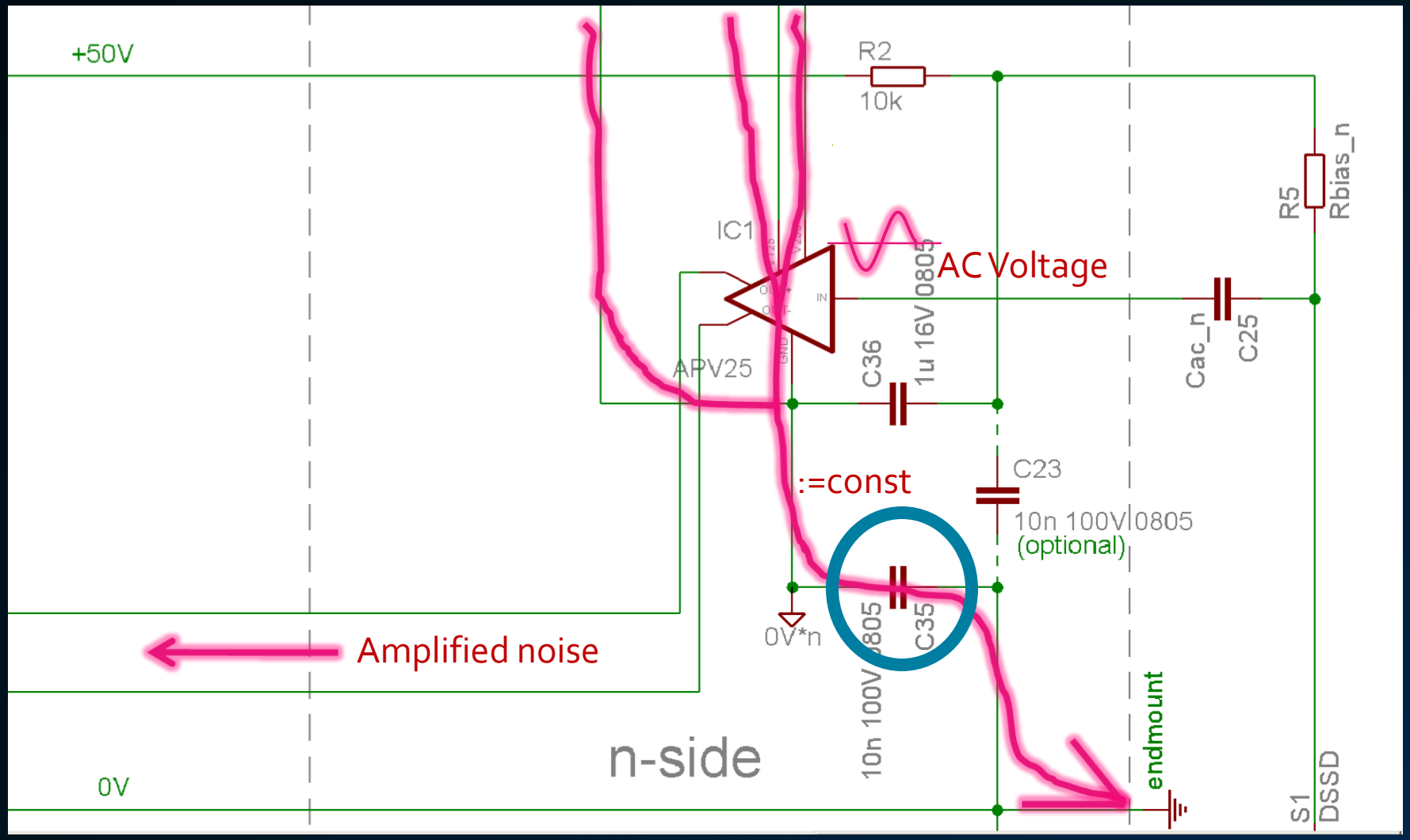

SVD EMC Tests – Bias Capacitor

Any AC Voltage on C35 acts as Noise Input for the APV25. And gets amplified. Consequently, C35 will be changed from 10nf → 100nF.

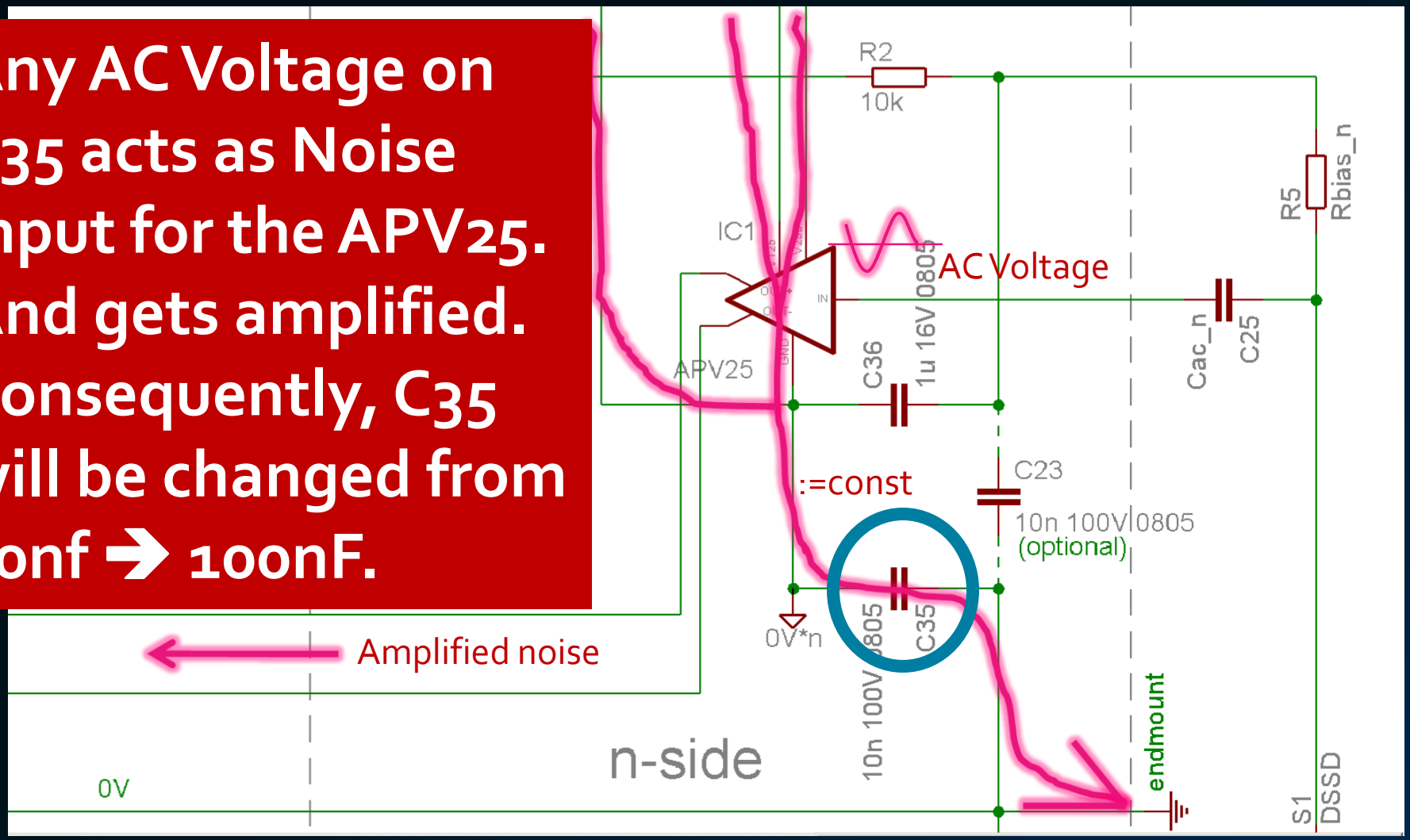

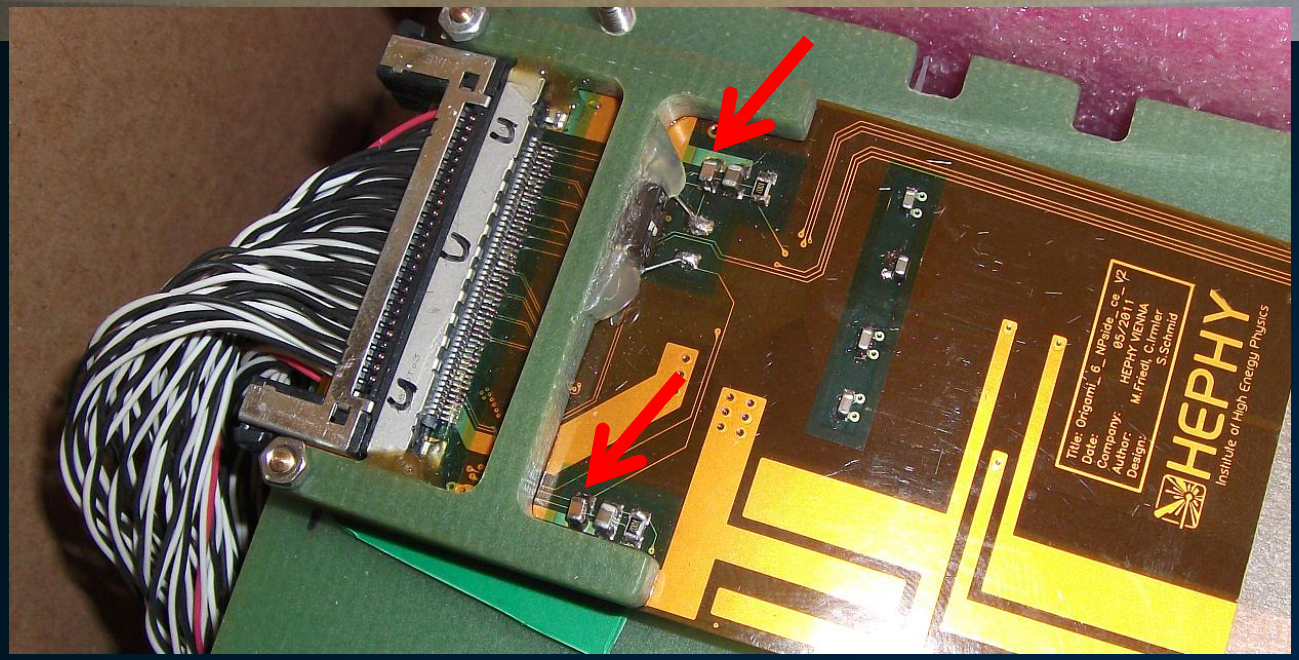
Title: Origami_6_NPside_ce_V2
Date: 05/2011
Company: HEPHY WIENNA
Author: M.Friedl, C.Irmler
Design: S.Schmid
HEPHY
Institute of High Energy Physics

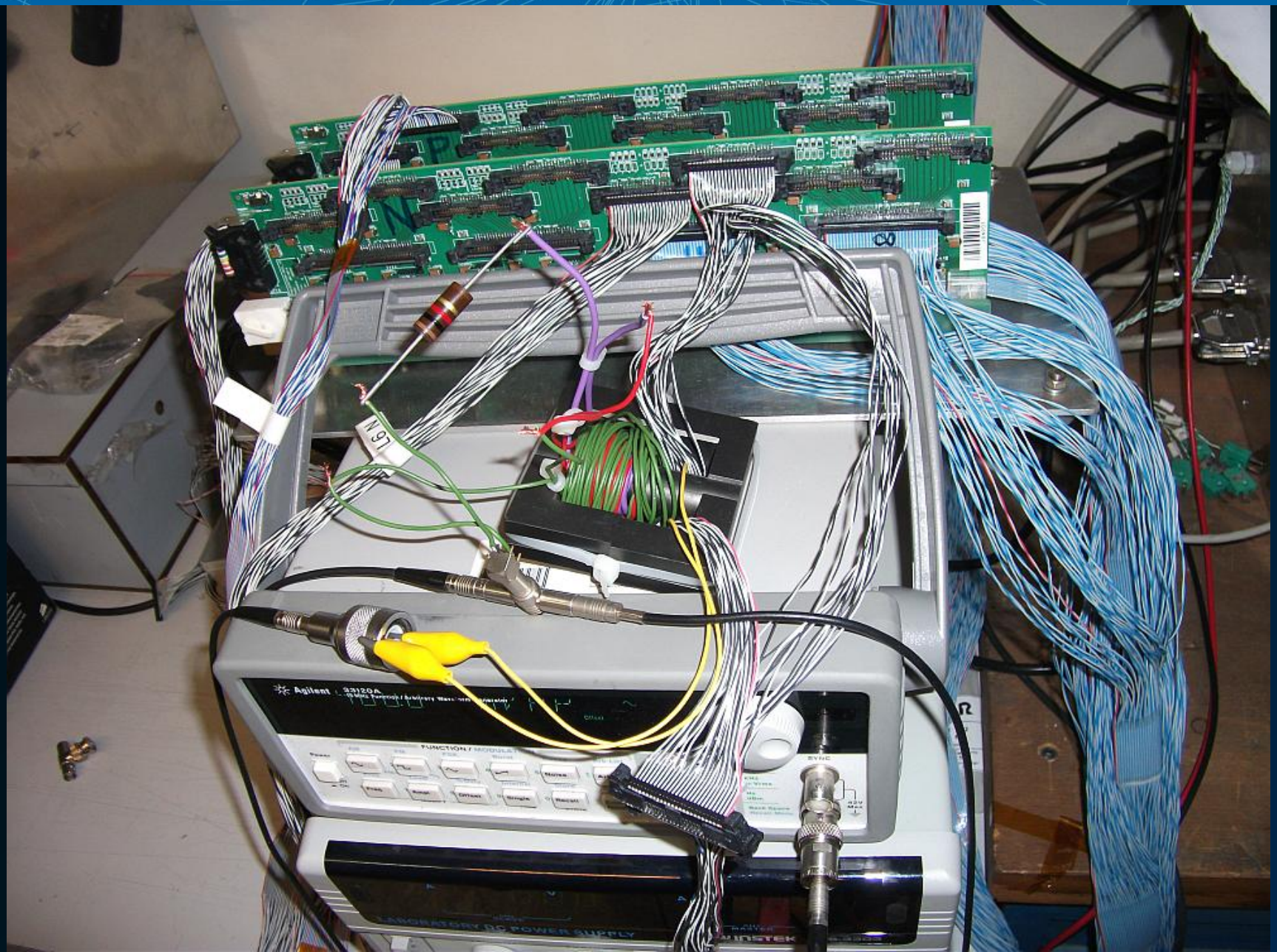
Agilent 33120A
LABORATORY DC POWER SUPPLY

SVD EMC Tests – Bias Capacitor

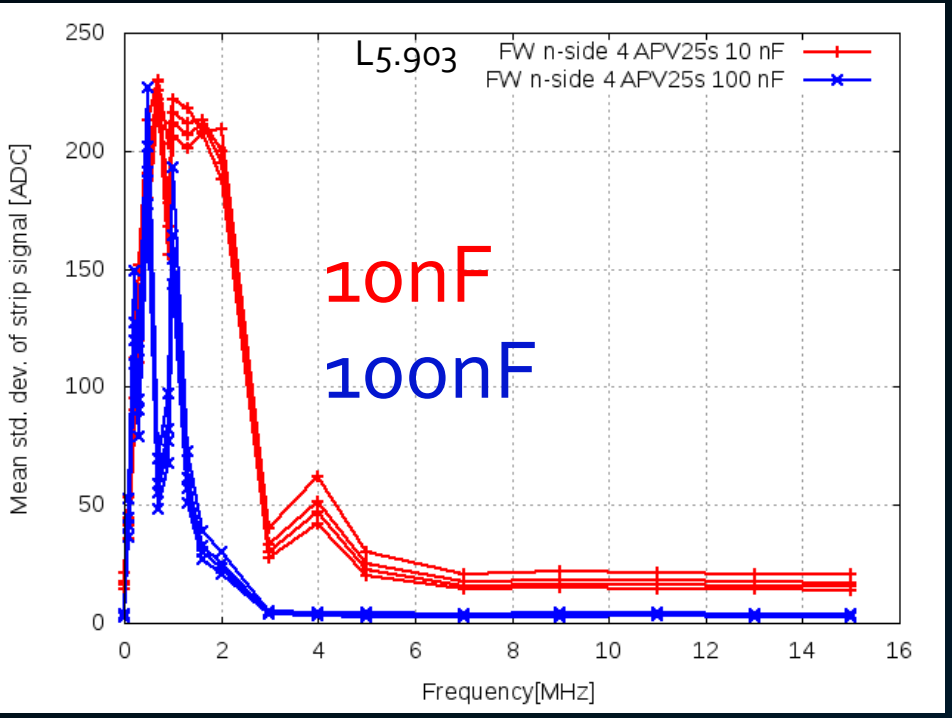

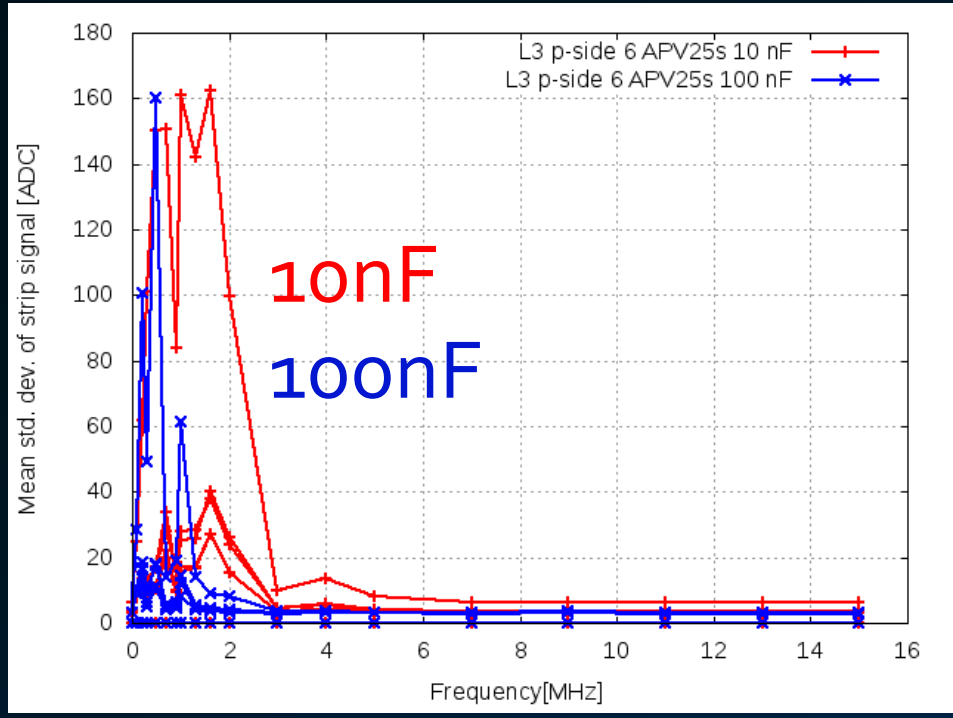

Chip average Strip RMS noise (without CMC) vs. noise frequency; Noise Injected in n-side

Big improvement particularly above 1MHz. Up to factor 10

- Belle II - Introduction
- SVD EMC Tests
- **PXD Power Cable Studies**
- Conclusions and Outlook

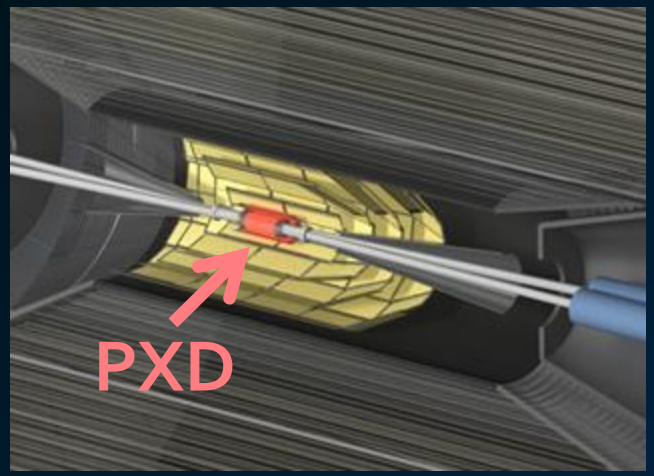

Shared SVD/PXD-Carbon Fiber Shell,
15m Cabling very close together ➔
Shared Noise Properties.

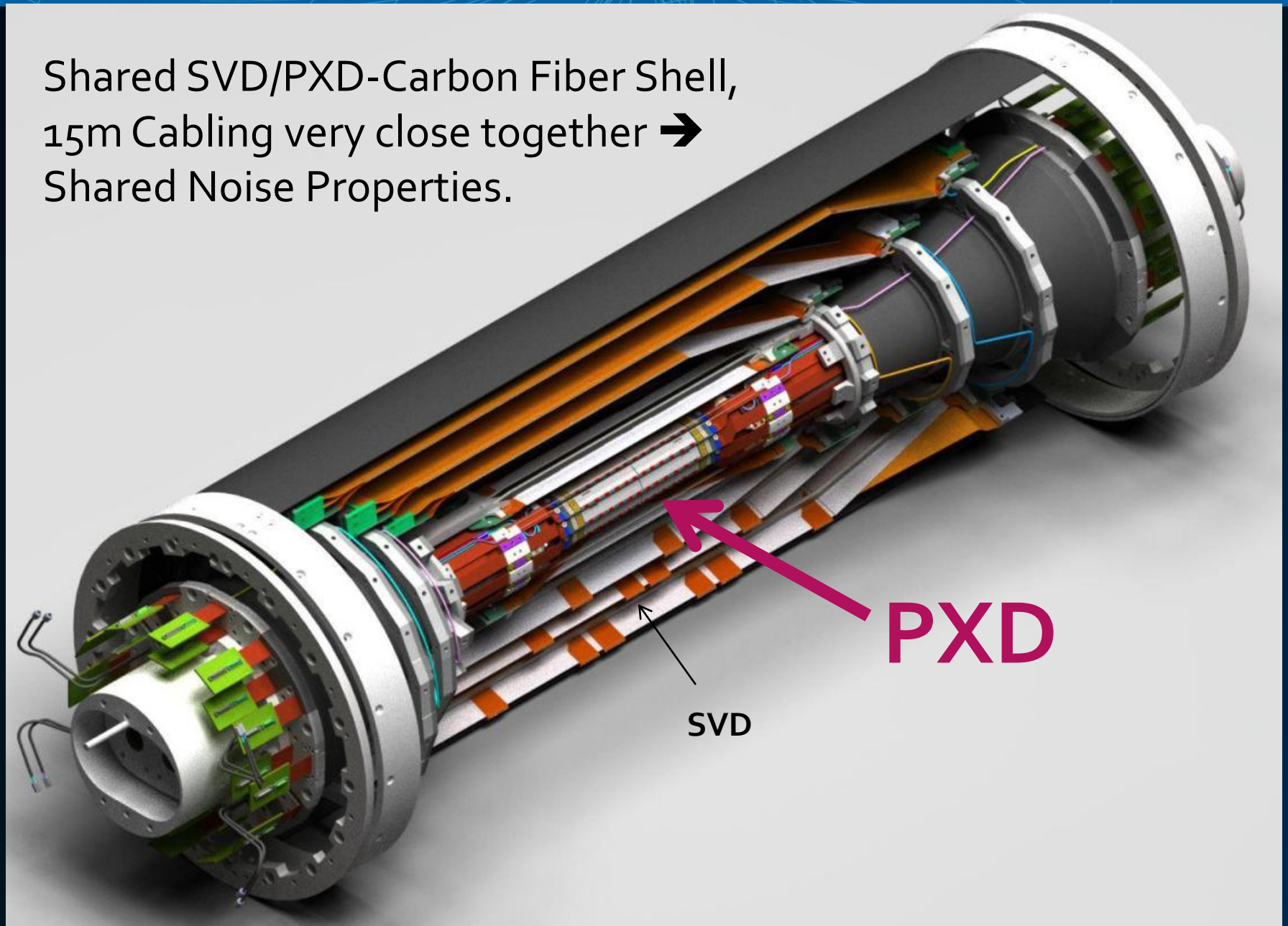

PXD Frontend and Power Supply

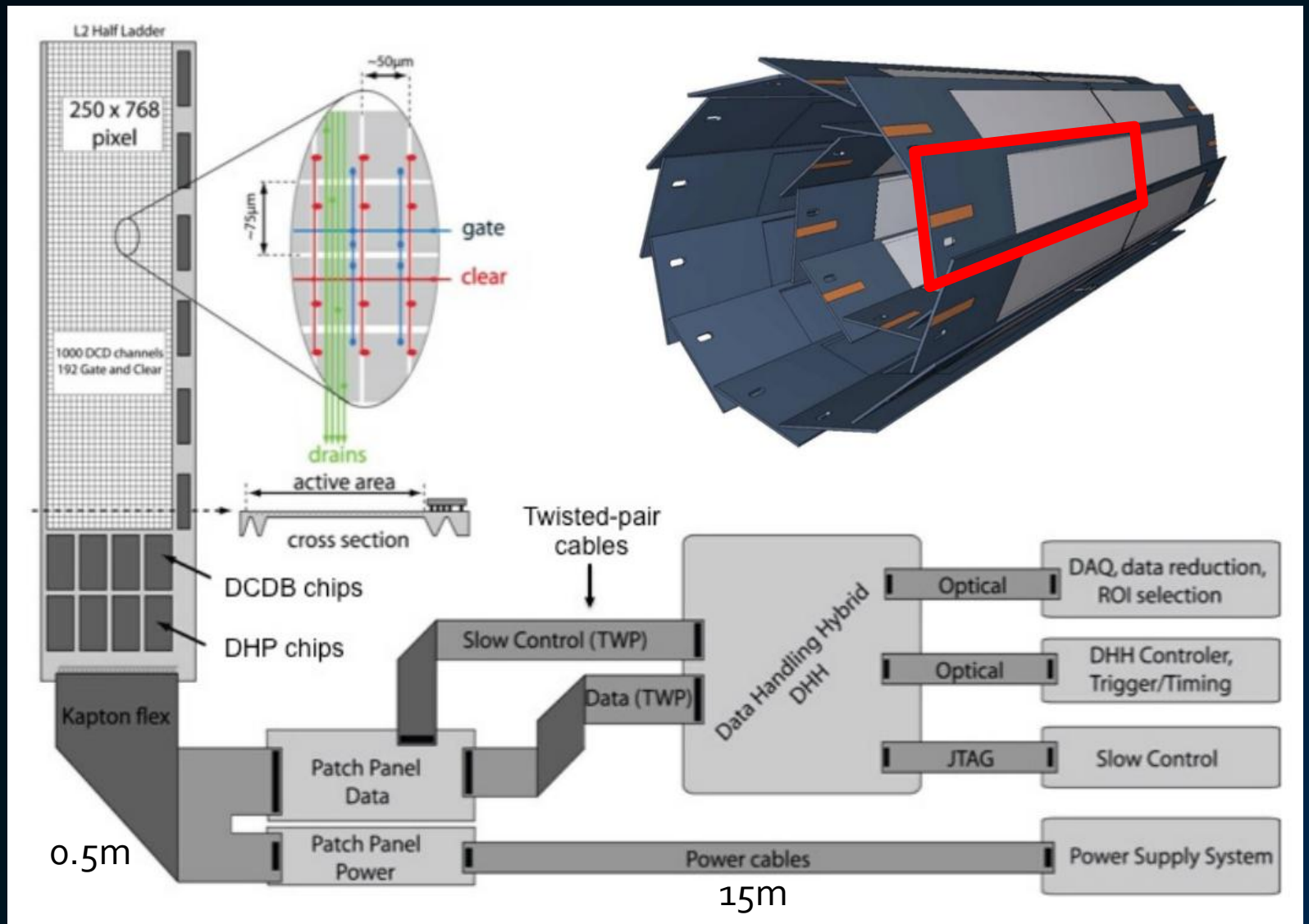

PXD Frontend and Power Supply

Noise propagation study has been focused on the complex power cable witch pass very closely to the SVD sub-system.

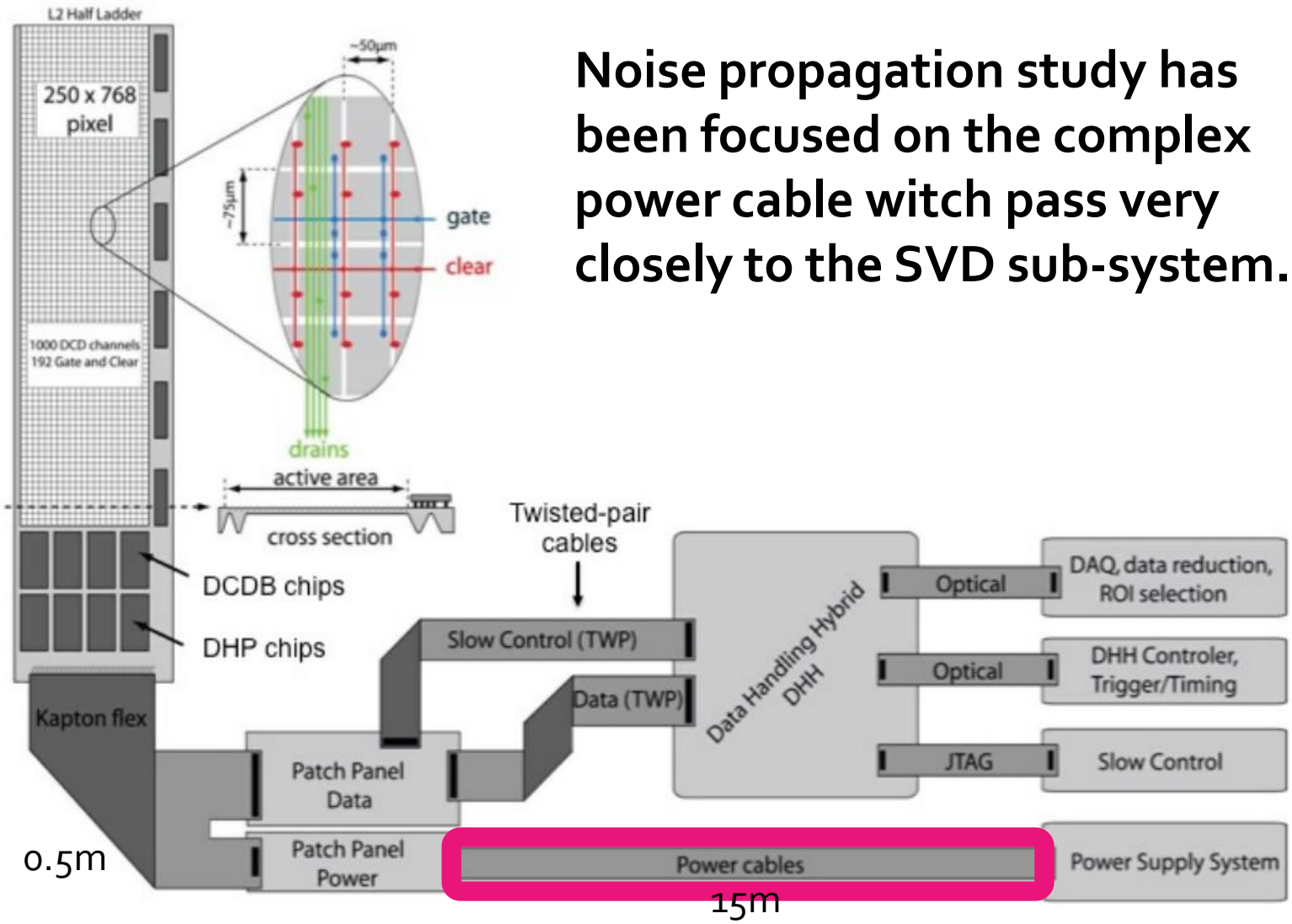

PXD Voltage Requirements

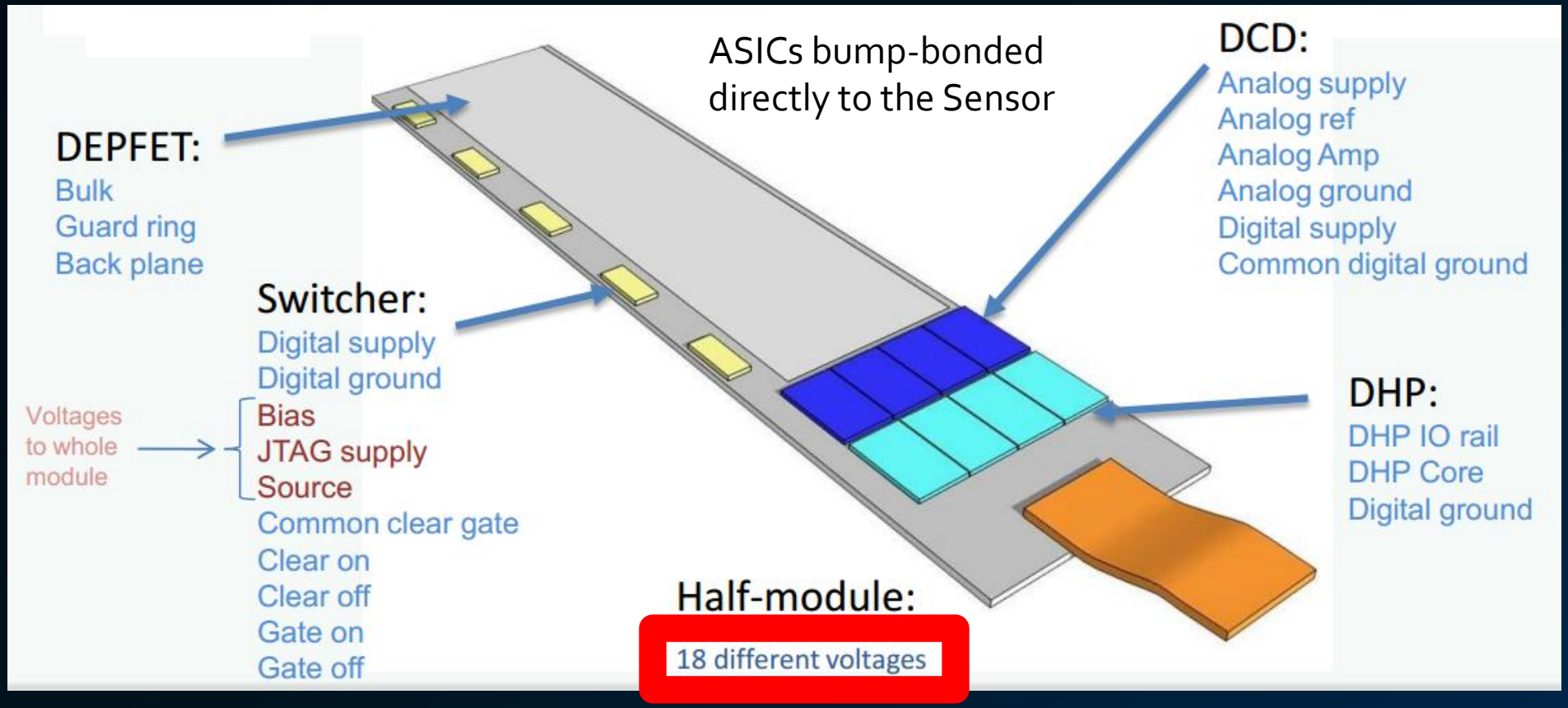

PXD Power Supply: 6x DC-DC, 2 cables

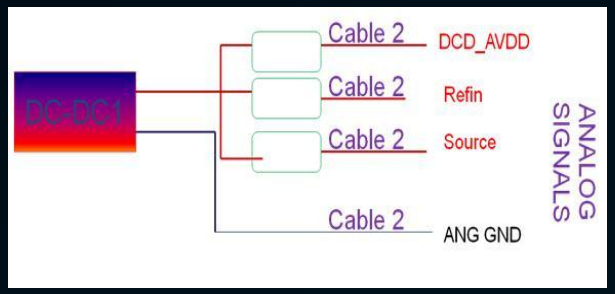

DC-DC 1 converter

Common power return

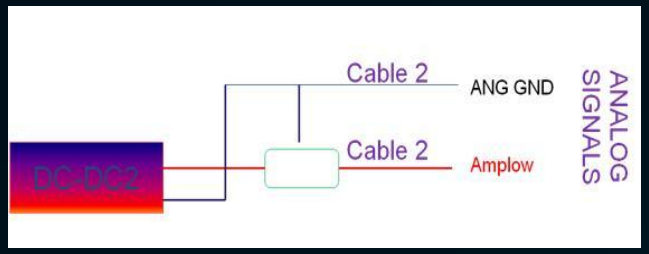

DC-DC 2 converter

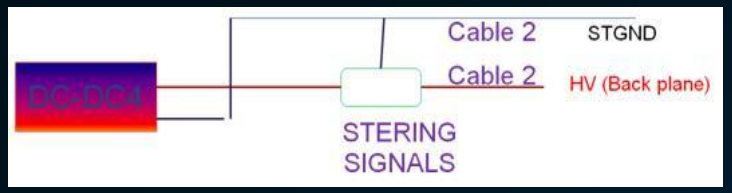

DC-DC 4 converter

Common power return

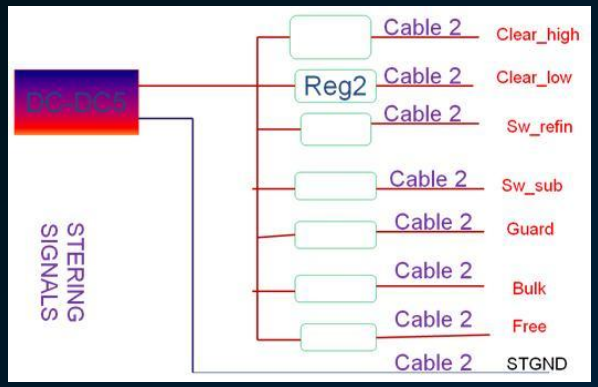

DC-DC 5 converter

Power Cable 2

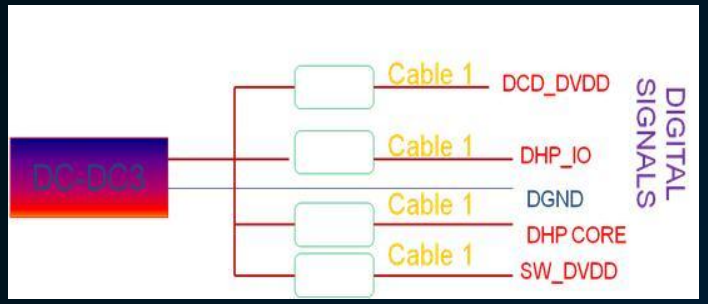

DC-DC 3 converter

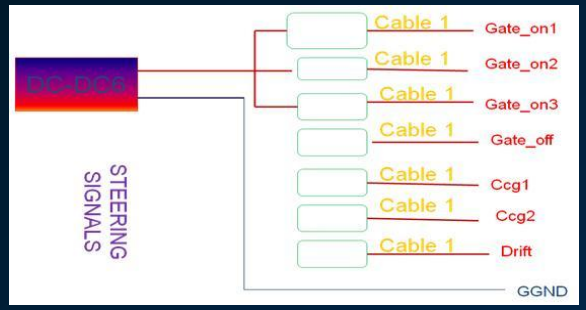

DC-DC 6 converter

Power Cable 1

PXD Power Cable

- The power cable is a very complex cable (30 conductors)
- Hybrid cable used for digital and analogue signals: Power, Bias & Sense.
- Construction:
  - Layer 1: 1x14AWG + 1x20AWG + 3X18AWG + 4x2X26AWG
  - Wrapping Aluminium foil to layer 1
  - Layer 2: 1x18AWG + 8X2X26AWG
  - Wrapping Aluminium foil to layer 2
  - Screen: tinned copper foil

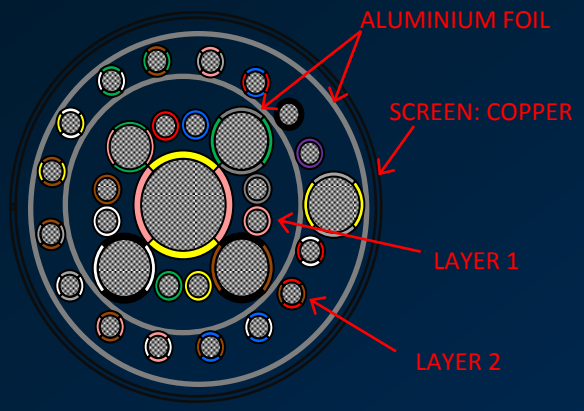

PXD Power Cable Noise Propagation

- Cable performance has been evaluated using Multi-conductor Transmission Line Theory (MTL).
- The MTL model divided the cable into 3 systems
- Assumptions:
  - Propagation is in Transverse electromagnetic mode (TEM)
  - R,L,C,G line parameter matrices per length unit
  - Voltages & Currents are vectors
- A MATLAB program has been developed in order to solve numerical MTL equations.
  - Parameters have been validated with real measurements

External system

Steering system

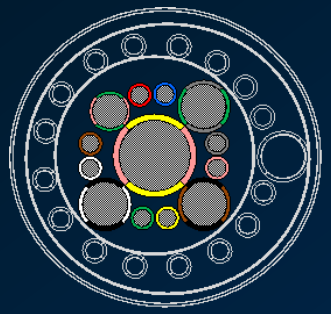

Analog/ Digital system

PXD Cable Measurement & matrix calculation

L, C and R matrix measurements

- External system: 1x1 Matrix for each L,C,R
- Steering system: 18x18 Matrix for each L,C,R
- Analogue/Digital system: 13x13 Matrix for each L,C,R

External system

Steering system

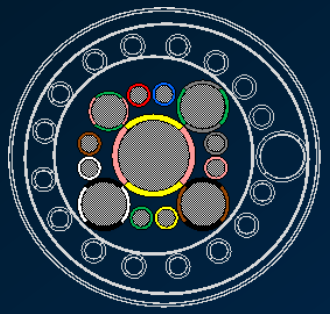

Analog/ Digital system

Common Mode (CM) Noise from the PS

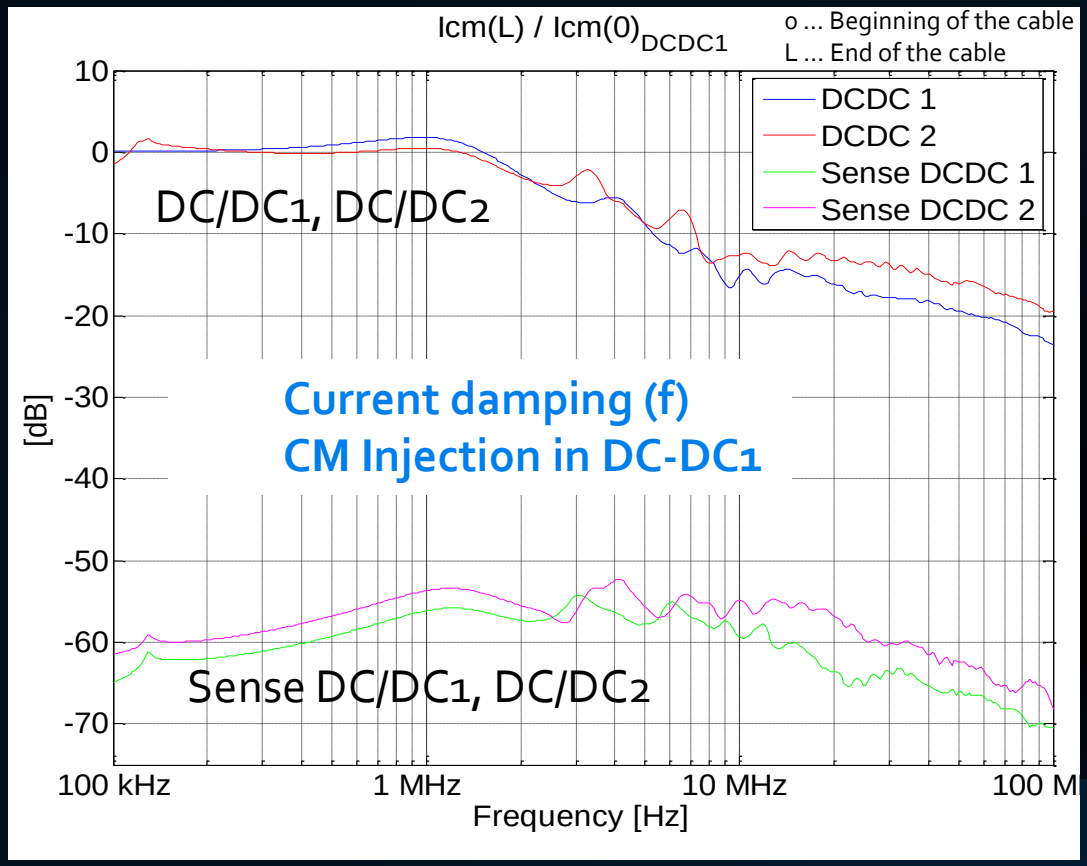

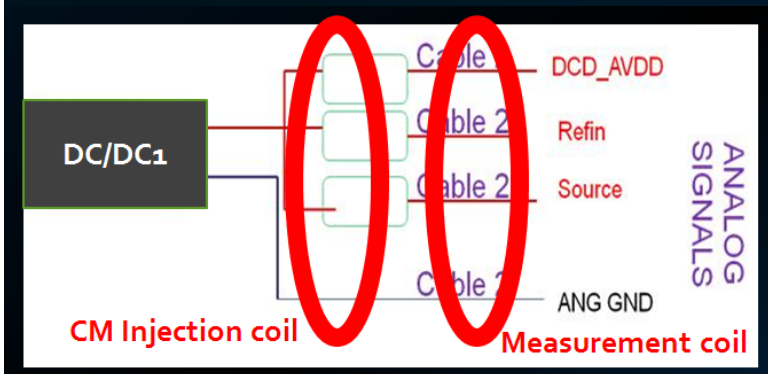

Same ground wire!

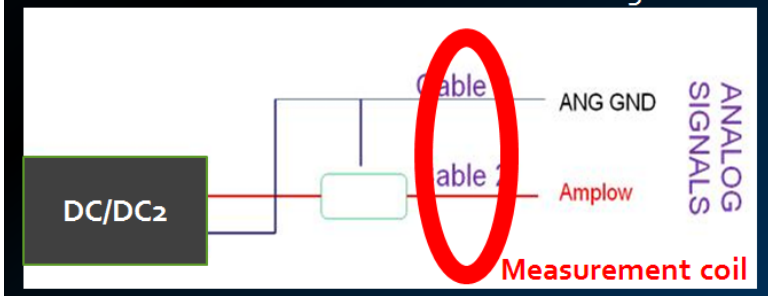

- Sense lines have low noise coupling due to the high impedance
- DCDC1 to DC-DC2 / DC-DC2 to DC-DC1 have similar noise coupling because of the common power return

Diff. Mode (DM) Noise from the PS (ripple)

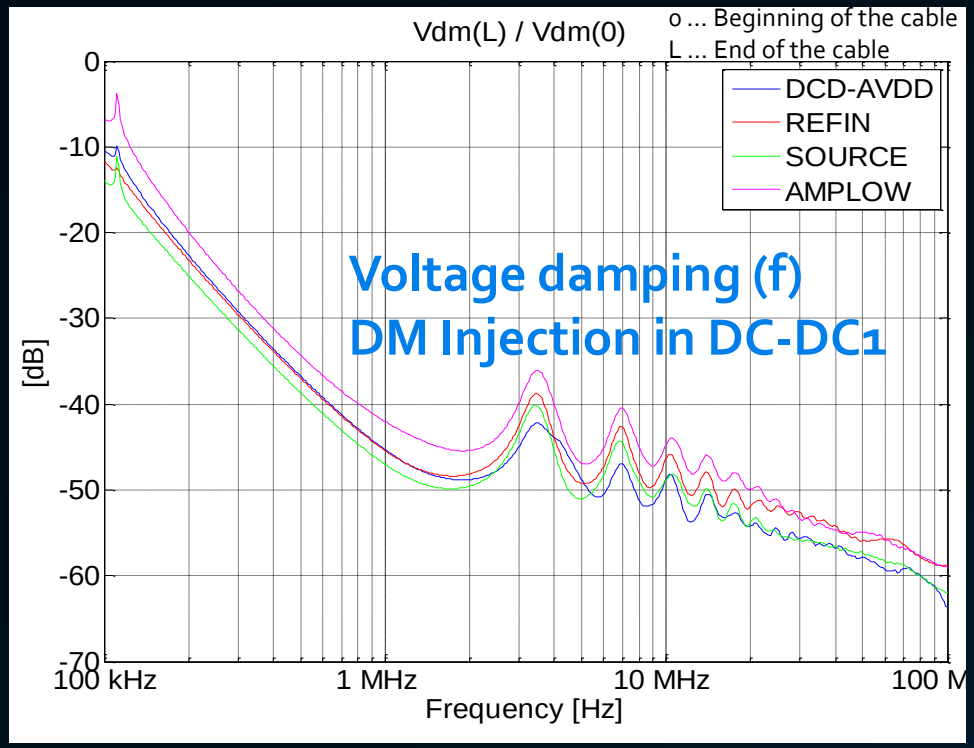

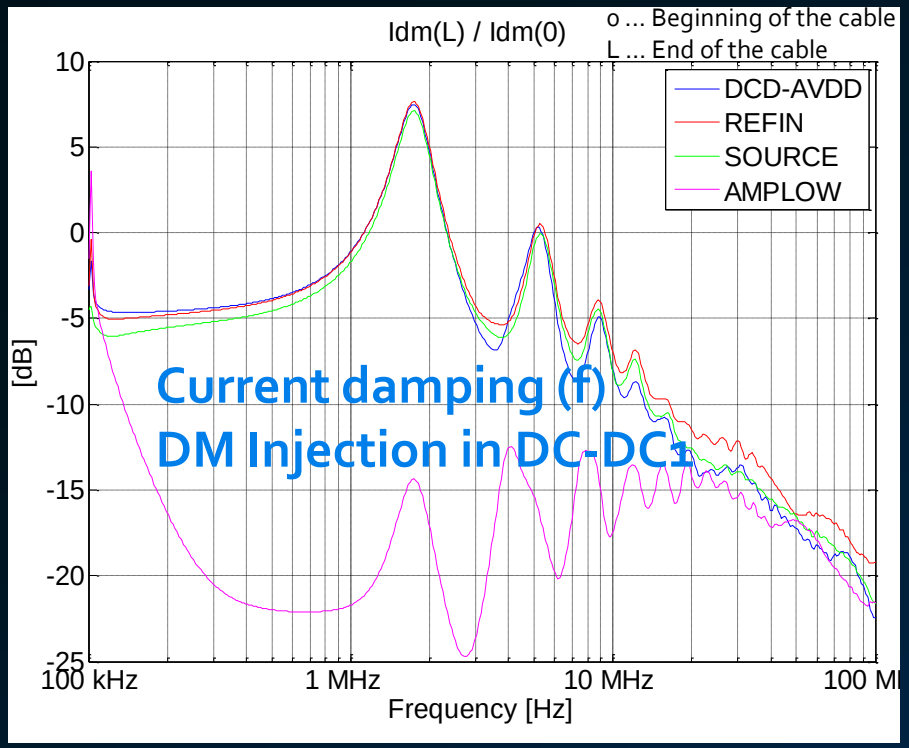

- Voltage is well attenuated due to DM capacitors
  - Similar voltage in complementary lines because of the Common return
- Current can even be amplified on some frequencies, but almost no radiation is expected due to return path compensation (twisted pair)
  - Similar DM noise distribution in common lines
  - low DM currents are expected in other systems in LF

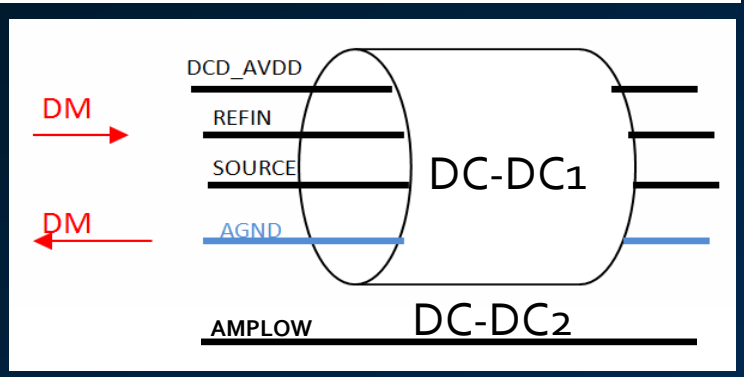

Shield Currents and Shield Connections

Simulated antenna injection (1V/m) into the cable.
How should the shields be connected? On no end? On one end? On both?

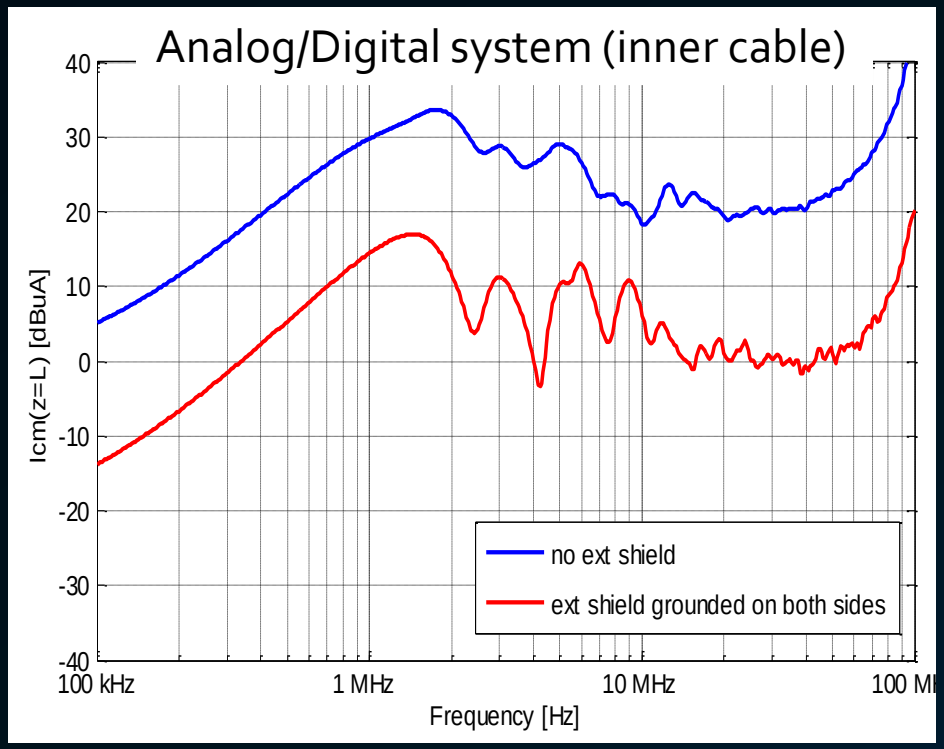

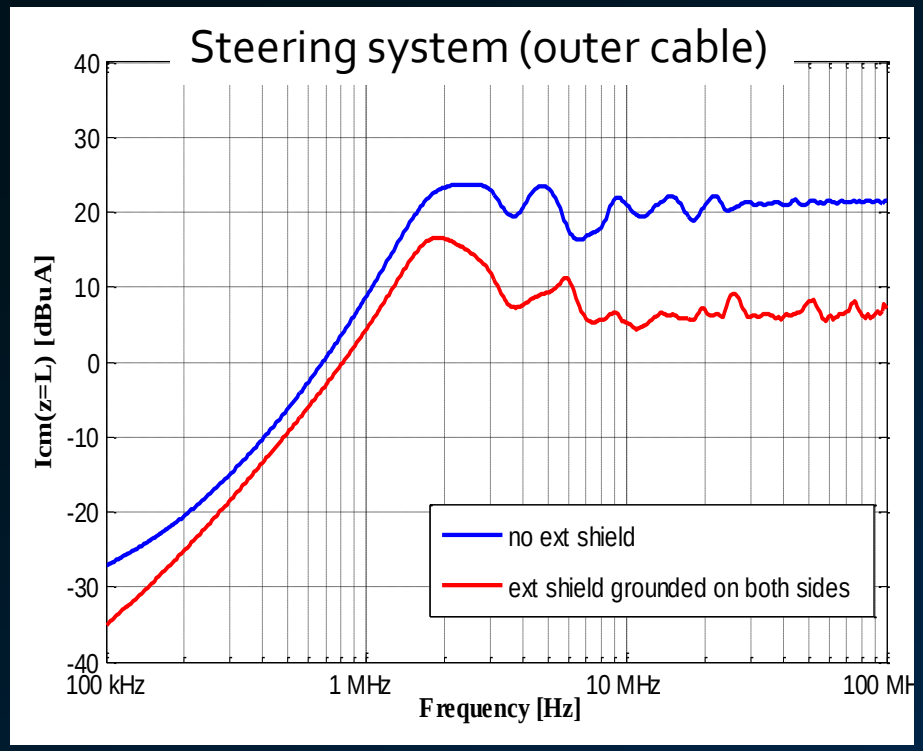

Outer shield connected to both ends improves the immunity to external fields.

- Belle II - Introduction
- SVD EMC Tests
- PXD Power Cable Studies
- **Conclusions and Outlook**

Conclusions and Outlook

- SVD emits very low noise
- SVD is very sensitive to external noise
- SVD EMC tests greatly helped to improve the noise immunity and to improve the power supplies
- PXD power cable has been systematically characterized
  - useful for further tests of SVD together with PXD
- PXD System will be measured - like it already happened with the SVD - at ITA Zaragoza in January 2016
  - very important to know which frequencies the SVD will get
- Combined PXD/SVD beam test at DESY Hamburg in April 2016

The End… Thanks for your attention ☺