CHEP'07 VICTORIA, BC
International Conference on Computing in High Energy and Nuclear Physics
2-7 Sept 2007 Victoria BC Canada

Simulation and Event Reconstruction inside the PandaRoot Framework

Stefano Spataro

for the panda collaboration

JUSTUS-LIEBIG-UNIVERSITÄT GIESSEN

Overview

- Introduction on Panda
- Structure of the framework
- Event generation
- Detector implementation
- Reconstruction

The Panda experiment

AntiProton Annihilations at Darmstadt

Multi purpose detector at FAIR

$\bar{p}p$, $\bar{p}A$ collisions
1.5⇒15 GeV/c ($\bar{p}$ momentum)

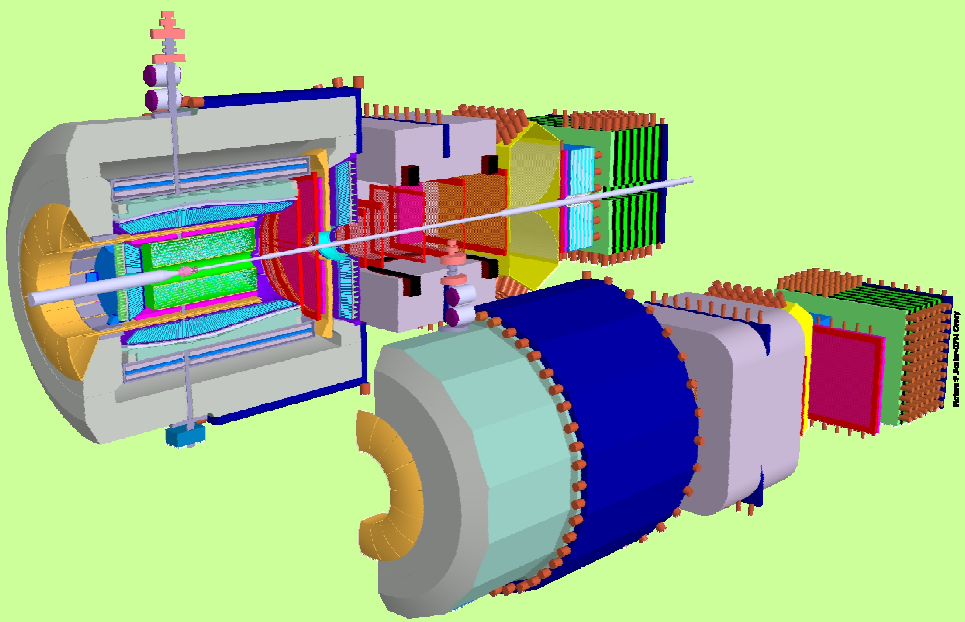

Physics program

- Charmonium ($\bar{c}c$) spectroscopy
- Open charm spectroscopy
- Search for gluonic excitations (hybrids - glueballs)
- Charmed hadrons in nuclei
- Single and double Hypernuclei
- Other options (Parton Distrib., EM Form Factor…)

Software development in Panda

In September 2006

Panda collaboration board

Developing the code inside FairRoot project

see
D.Bertini talk
h. 16:50 here

PandaRoot

- Framework for simulation and analysis
- Based on ROOT (5.14)
- Virtual Monte-Carlo (VMC 2.0, G4 8.2)
- Working on many Linux distributions and with many compilers

Debian 3.1
Gentoo
SUSE (9, 10.X)
Fedora (2, 4, 5)
Ubuntu
SL (3, 4)
…

Gcc 3.3.5
Gcc 3.4.2
Gcc 4.0.2
Gcc 4.0.3
Gcc 4.1.4
Gcc 4.1.2
…

…compiled and running on more than 10 Linux platforms

Cross-check between different distributions

login or create account

PandaRoot Dashboard

10. August 2007 09:59:59 CEST

Repository > | Documentation > | Home

[Nightly] [Continuous] [Experimental] [Coverage] [Style] [DynamicAnalysis]

« Nightly - 09.08.07 10:00 to 10.08.07 10:00 »

Site	Build Name	Update	Build			Test				TimeStamp
			Error	Warning	Time	NotRun	Failed	Passed	Time	
opteron.cluster.rug.nl	Debian-GNU/Linux-gcc3.3.5	152	2	2	15,3	0	0	3	1,6	10.08.07 06:00
kvip81.kvi.nl	Fedora-GNU/Linux-gcc3.4.2	152	2	2	10,7	0	0	3	1,6	10.08.07 06:00
cca03.physik.uni-giessen.de	Gentoo-GNU/Linux-gcc4.1.1	128	0	2	14,7	0	0	3	1,3	10.08.07 06:00
pktw61.phy.tu-dresden.de	openSUSE-10.2-GNU/Linux-gcc4.1.2	88	0	2	5,7	0	0	3	0,9	10.08.07 01:59

[Nightly] [Continuous] [Experimental] [Coverage] [Style] [DynamicAnalysis]

« Continuous - 09.08.07 10:00 to 10.08.07 10:00 »

Site	Build Name	Update	Build			Test				TimeStamp ↓
			Error	Warning	Time	NotRun	Failed	Passed	Time	

[Nightly] [Continuous] [Experimental] [Coverage] [Style] [DynamicAnalysis]

« Experimental - 09.08.07 10:00 to 10.08.07 10:00 »

Site	Build Name	Update	Build			Test				TimeStamp ↓
			Error	Warning	Time	NotRun	Failed	Passed	Time	
opteron.cluster.rug.nl	Debian-GNU/Linux-gcc3.3.5		2	2	15,1	0	0	3	1,6	10.08.07 01:02
kvip81.kvi.nl	Fedora-GNU/Linux-gcc3.4.2	150	2	2	11,0	0	0	3	1,4	10.08.07 01:01
opteron.cluster.rug.nl	Debian-GNU/Linux-gcc3.3.5	75	0	0	0,0					10.08.07 01:01
pktw61.phy.tu-dresden.de	openSUSE-10.2-GNU/Linux-gcc4.1.2		0	2	5,7	0	0	3	0,9	09.08.07 11:20
pktw61.phy.tu-dresden.de	openSUSE-10.2-GNU/Linux-gcc4.1.2	31	0	0	0,0					09.08.07 11:19

PandaRoot framework

High versatility

Detector geometries,
Magnetic field,...

Event Generation → Transport Model → Digitization Analysis

UrQmd, EvtGen, DPM...

Geant3, Geant4, (Fluka)

VirtualMC

Reconstruction

Event generation

Create physical events for realistic simulation

Flat generators ⇨ Uniform distributions — Acceptance, Efficiency, …

EvtGen generator ⇨ Handling of complex decay chains — Resonances

DPM generator ⇨ Dual Parton Model (string fragmentation) — background studies

UrQmd interface ⇨ Microscopic model for nuclear reactions — $\bar{p}A$ collisions

Detector implementation: proposed geometry

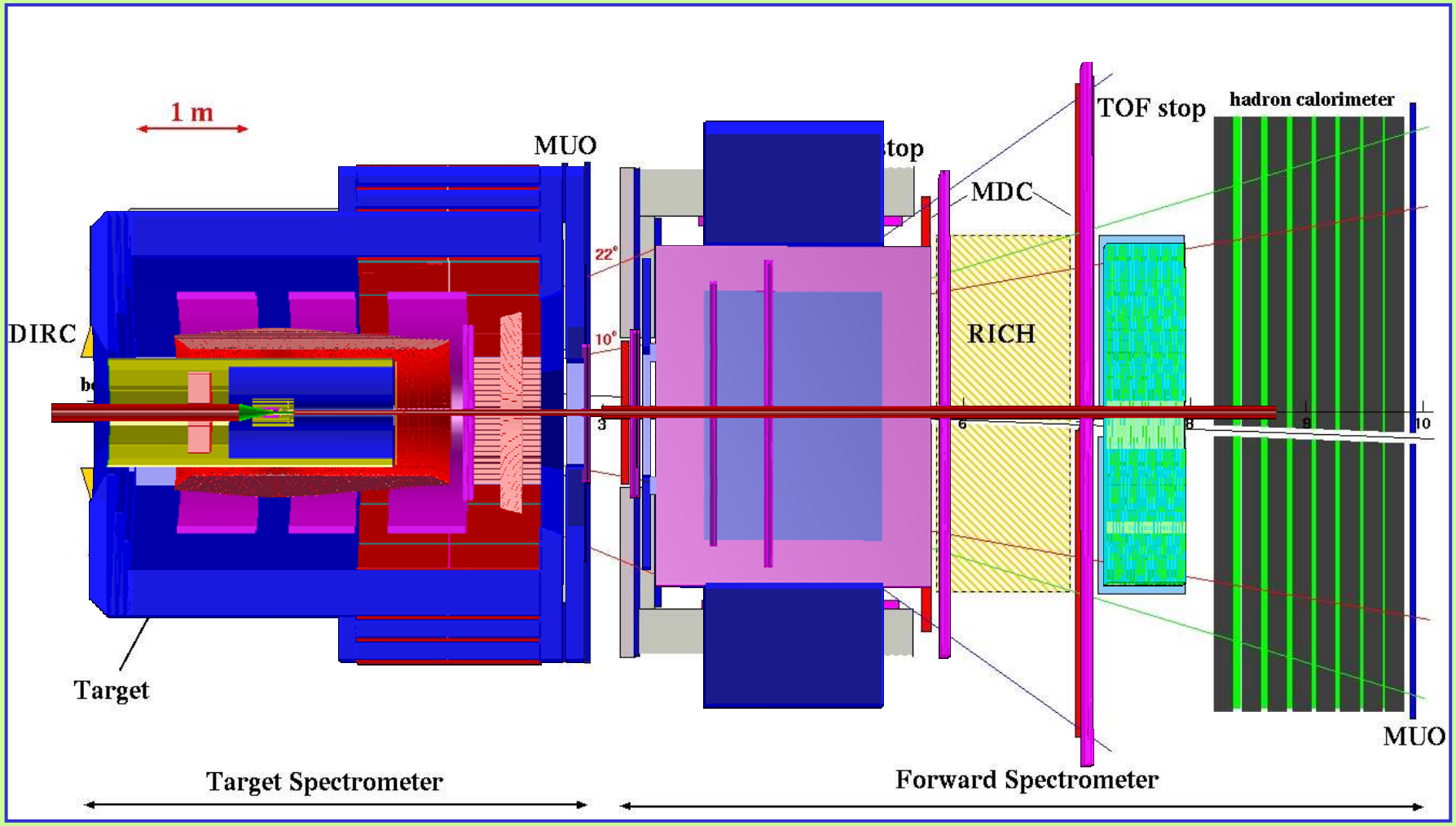

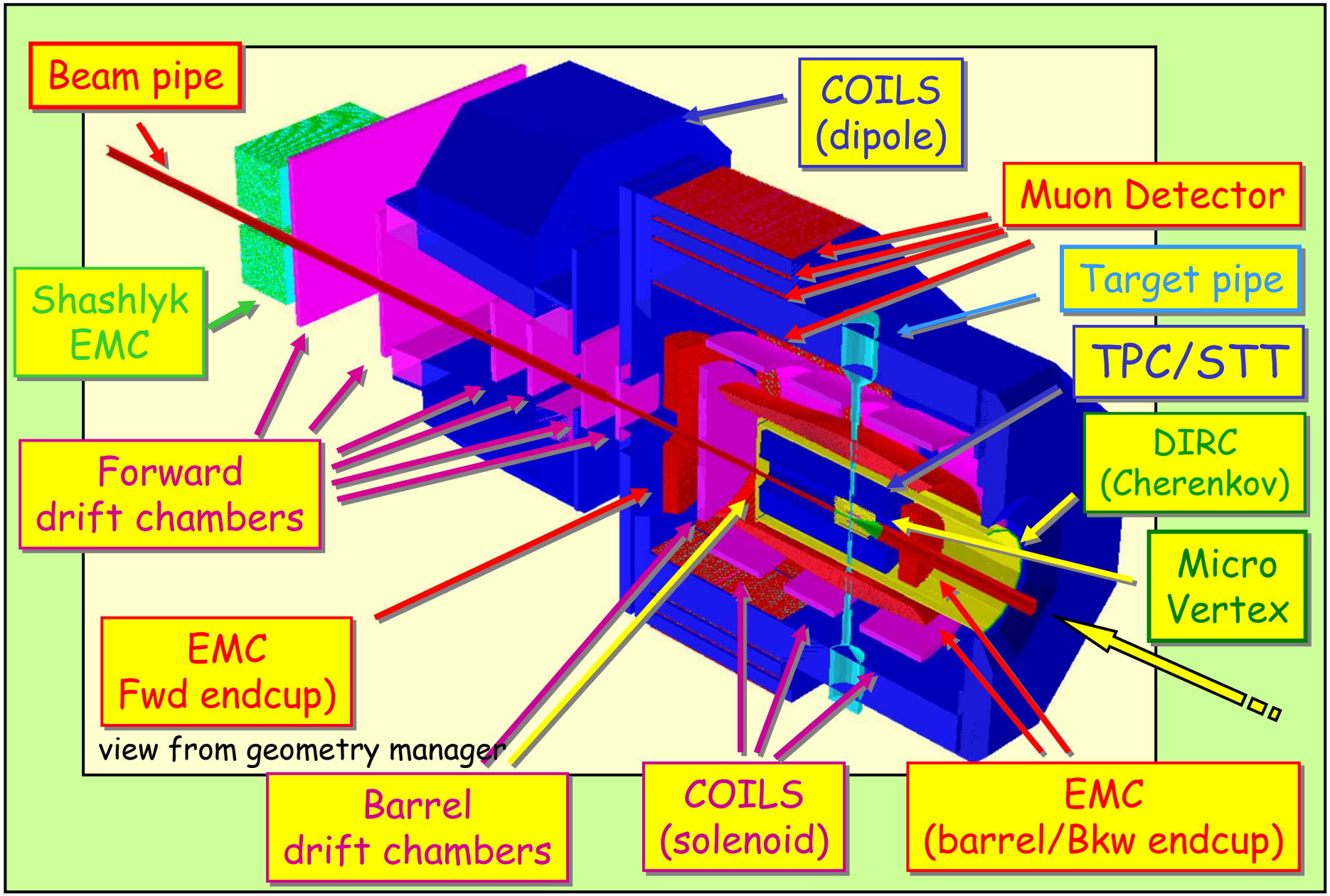
Beam pipe
COILS (dipole)
Muon Detector
Target pipe
Shashlyk EMC
TPC/STT
DIRC (Cherenkov)
Forward drift chambers
Micro Vertex
EMC Fwd endcup)
view from geometry manager
Barrel drift chambers
COILS (solenoid)
EMC (barrel/Bkw endcup)

Detector implementation: magnetic field map

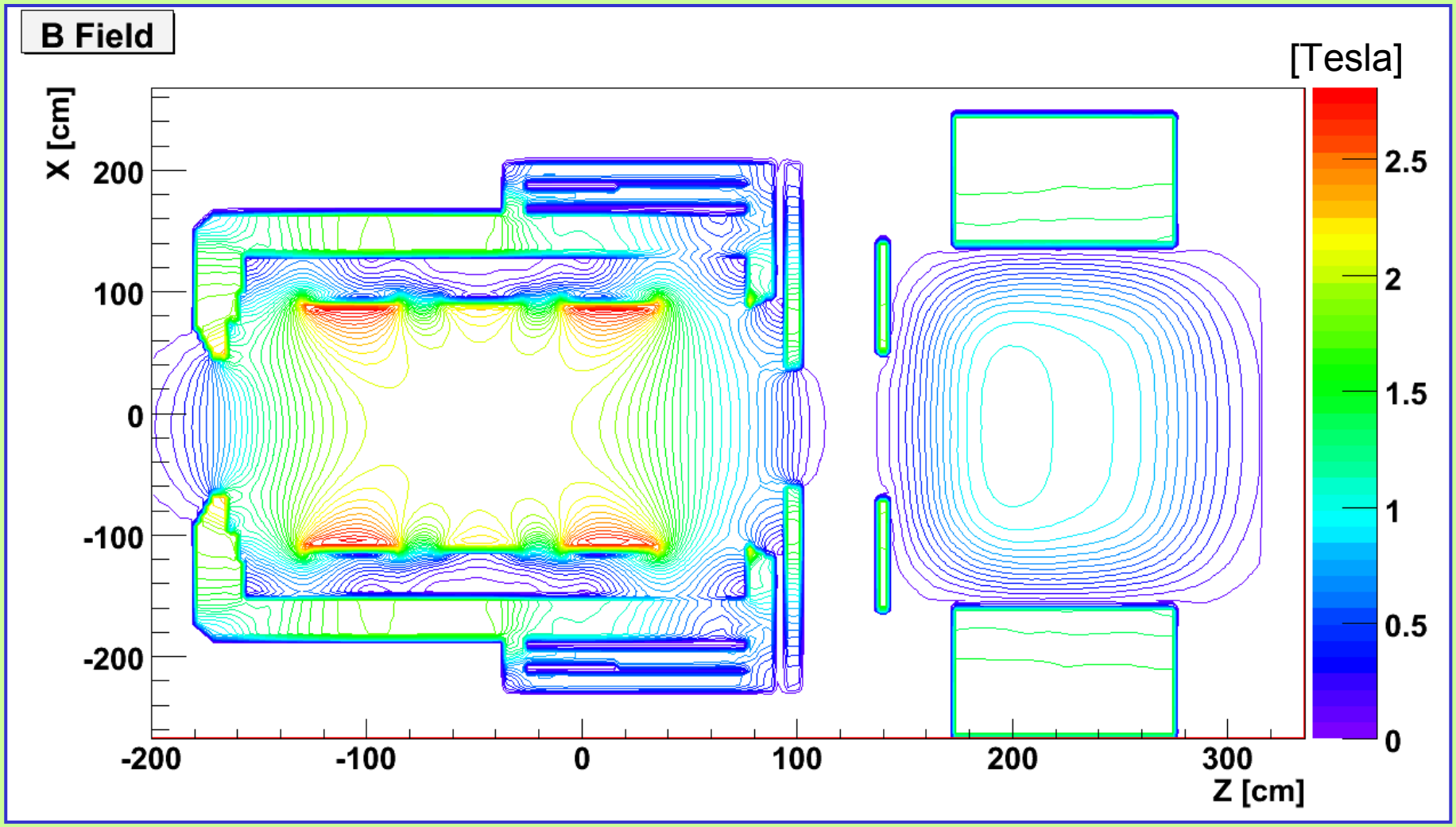

Tracking: target spectrometer

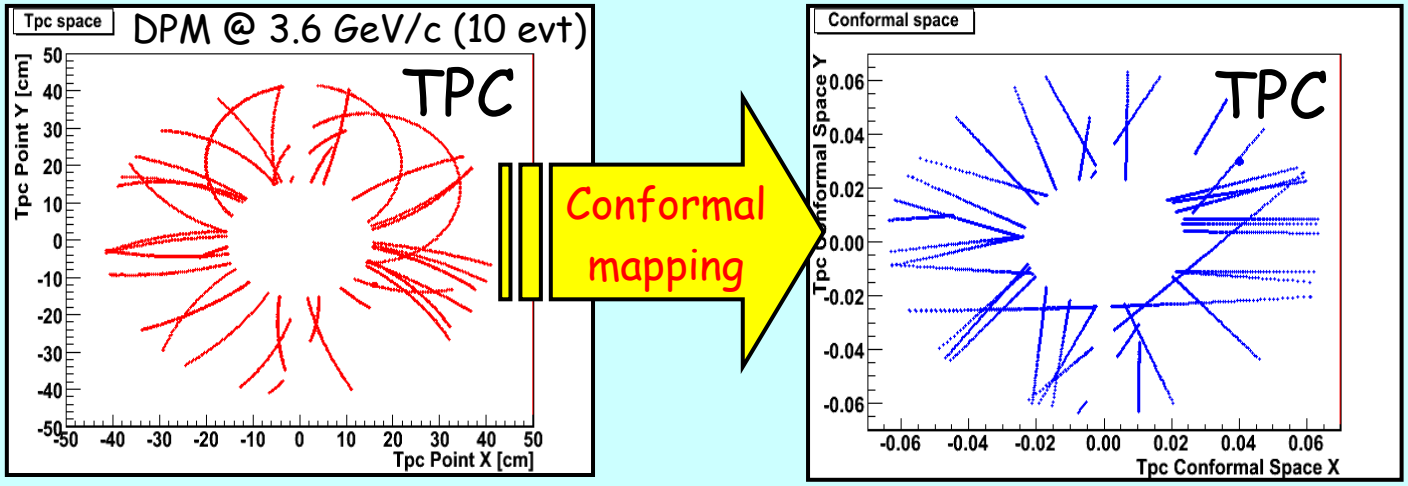

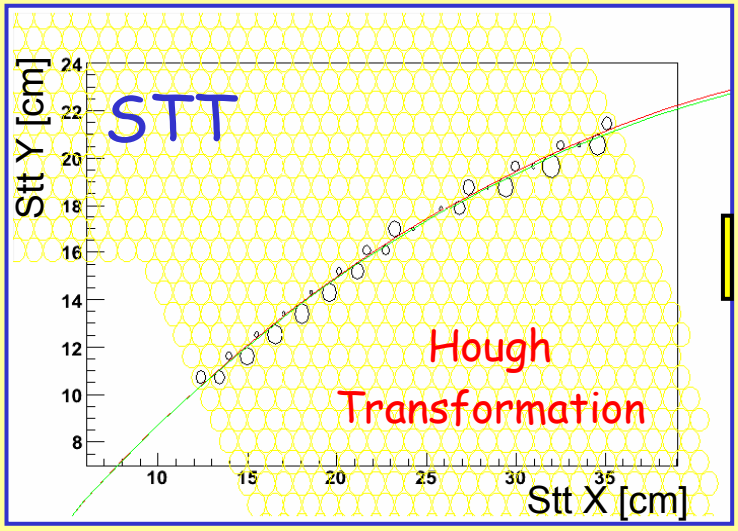

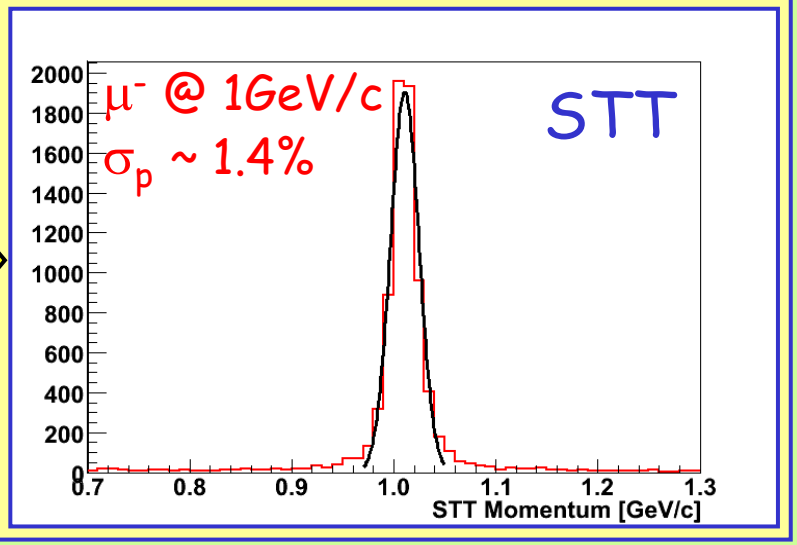

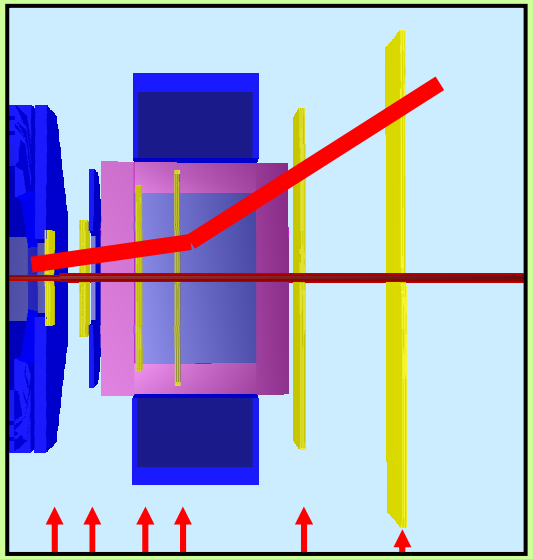

Tracking: forward spectrometer (θ<10°)

Six drift chamber planes

- Two before the magnetic field
- Two inside the magnetic field
- Two after the magnetic field

At the moment:

Pattern recognition:

- Principal Component Analysis

Momentum reconstruction:

- Kick parametrization (4 chambers)

Very fast algorithm (no fit)
Good prefit value for RK/Kalman

$\sigma(p)$ ~ 2% resolution

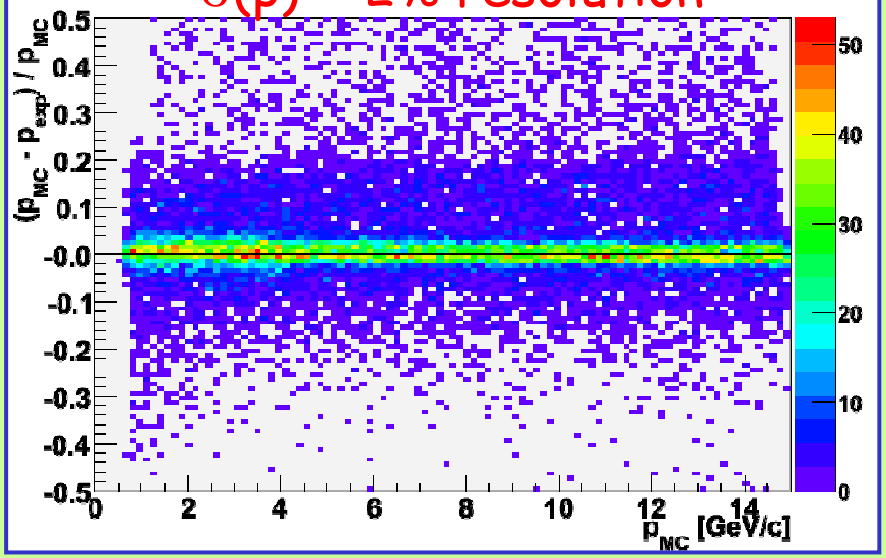

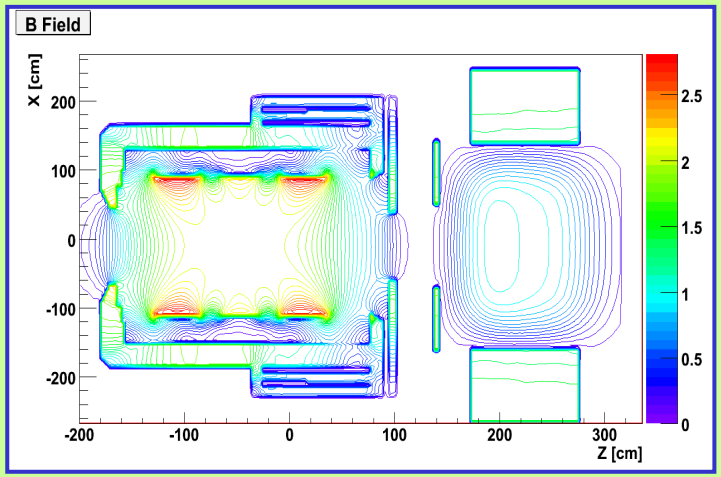

Global Tracking

- How to have a high resolution tracking?
- How to merge different detectors?
- How to deal with field inhomogeneity ?

Global tracking → Kalman Filter → genfit

Already working for TPC

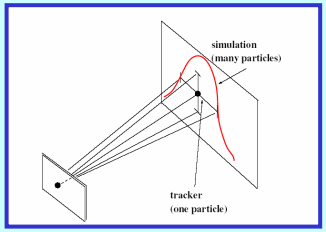

→ Track Follower ← GEANE

see A.Fontana Poster session

Use of the same geometry for simulation and track following !

EMC reconstruction

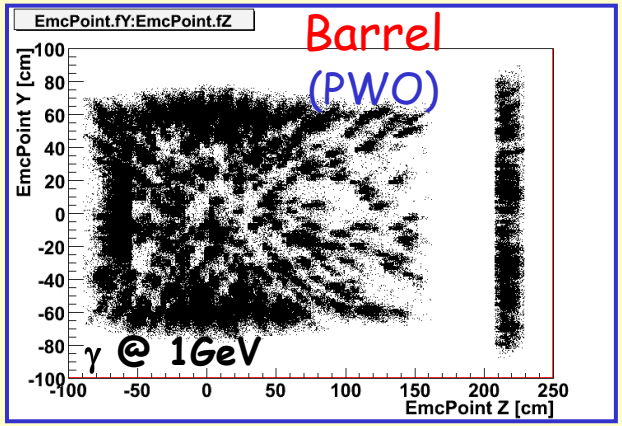

Full digitization
and
cluster recognition
(common code)

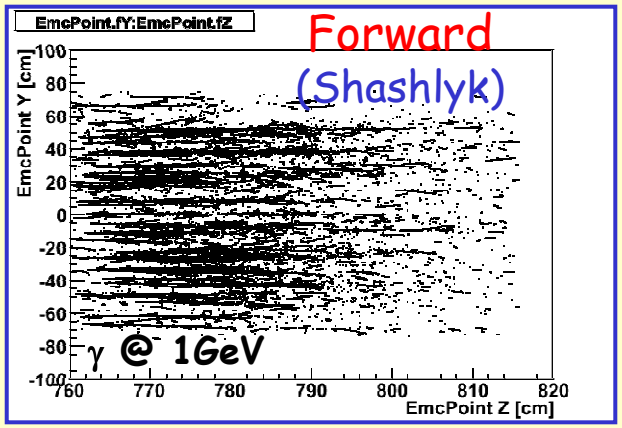

Example: neutral channel in barrel

$$\bar{p}p \rightarrow h_c \rightarrow \eta_c + \gamma$$

$$\eta_c \rightarrow \pi^0 + \pi^0 + \eta$$

$$\pi^0 \rightarrow \gamma + \gamma$$

$$\eta \rightarrow \gamma + \gamma$$

EvtGen
(phase space)

$M(h_c) = 3526\ \mathrm{MeV}/c^2$
$P_z(\bar{p}) = 5609\ \mathrm{MeV}/c$

7 photons in the final state

EMC Reconstruction

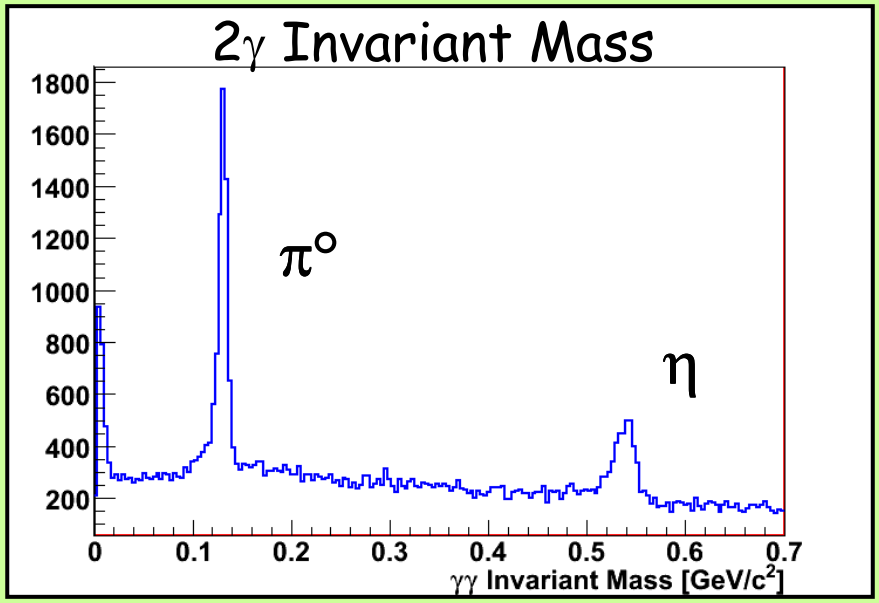

$$\bar{p}p \rightarrow h_c \rightarrow \eta_c + \gamma$$

$$\eta_c \rightarrow \pi^\circ + \pi^\circ + \eta$$

$$\pi^\circ \rightarrow \gamma + \gamma$$

$$\eta \rightarrow \gamma + \gamma$$

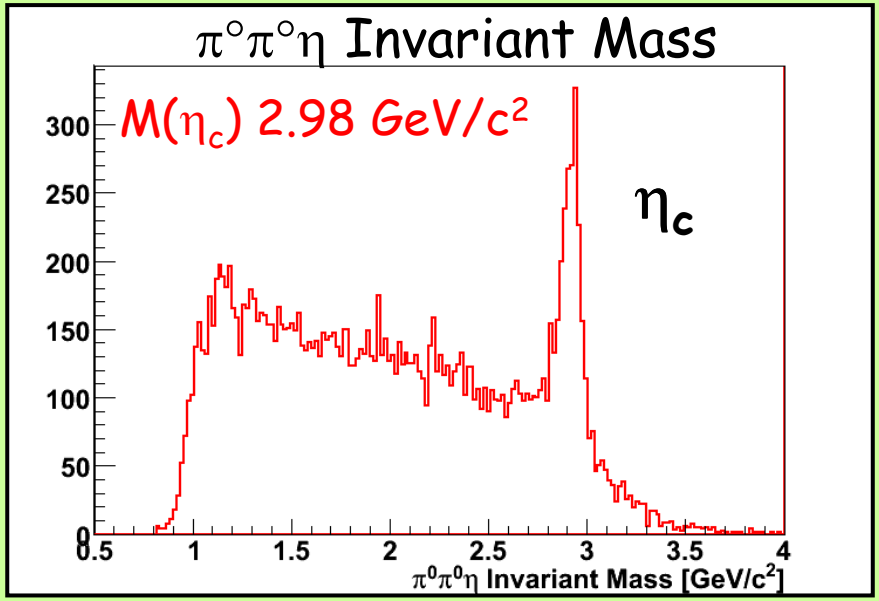

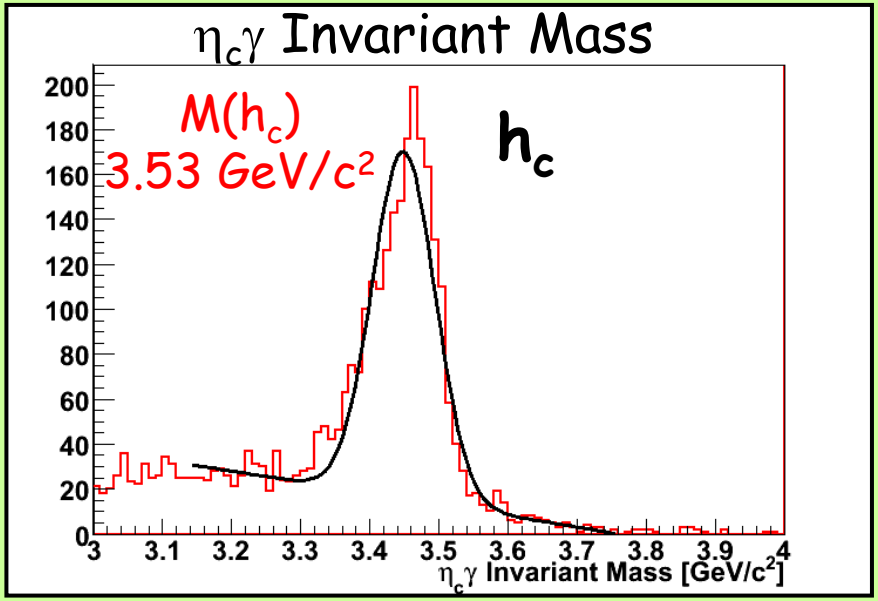

Transport Models Comparison

VirtualMC

With exactly the same code
Changing only one flag

μ^- @ 1 GeV/c

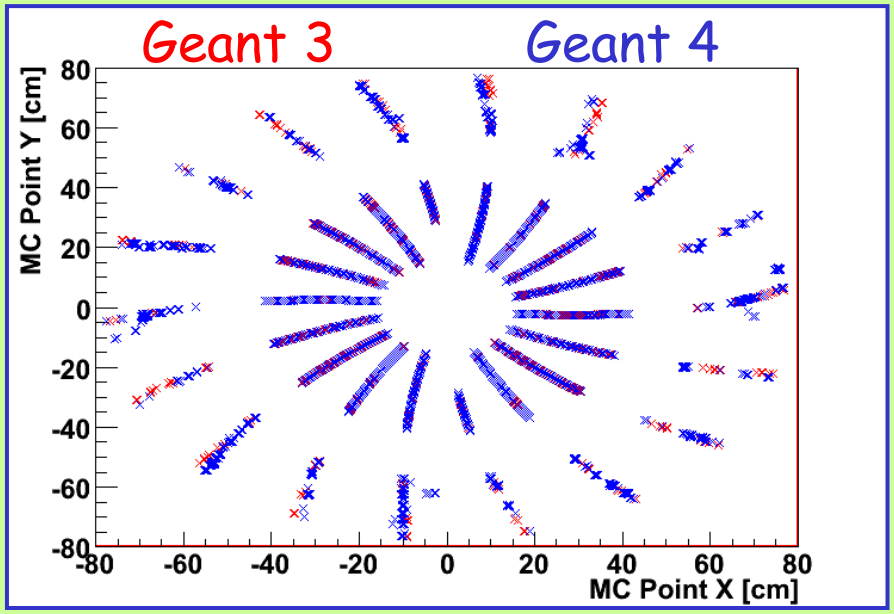

γ @ 1 GeV/c

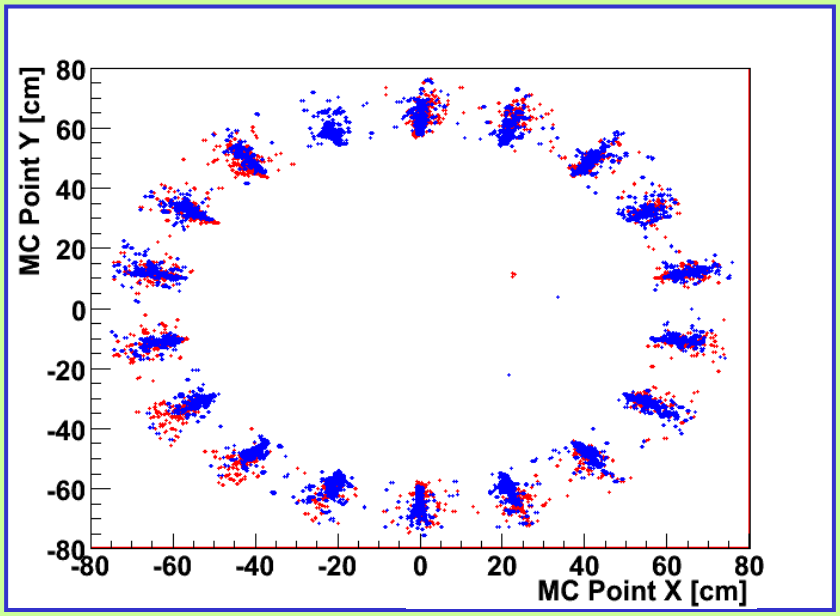

Comparison: γ @ 1GeV in EMC

G4 9.0 – EmStandard+EmExtra

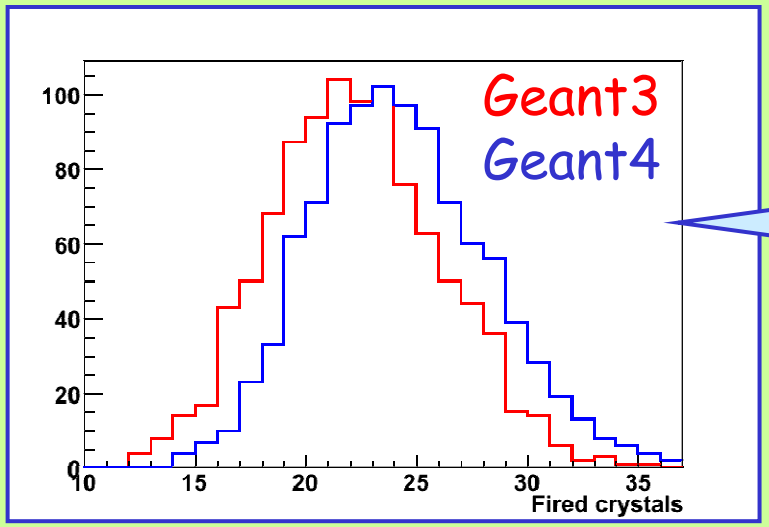

Fired crystals multiplicity

lists/cuts tuning

comparison with bench tests

Deposited energy (MC)

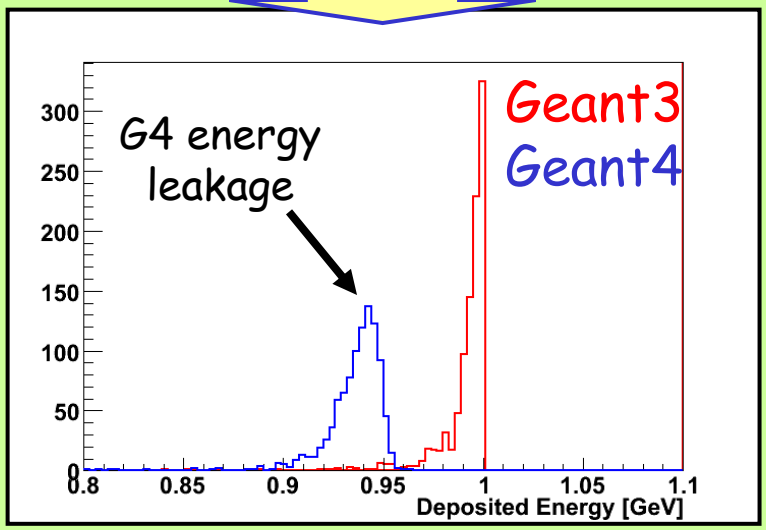

Reconstructed energy (clusters)

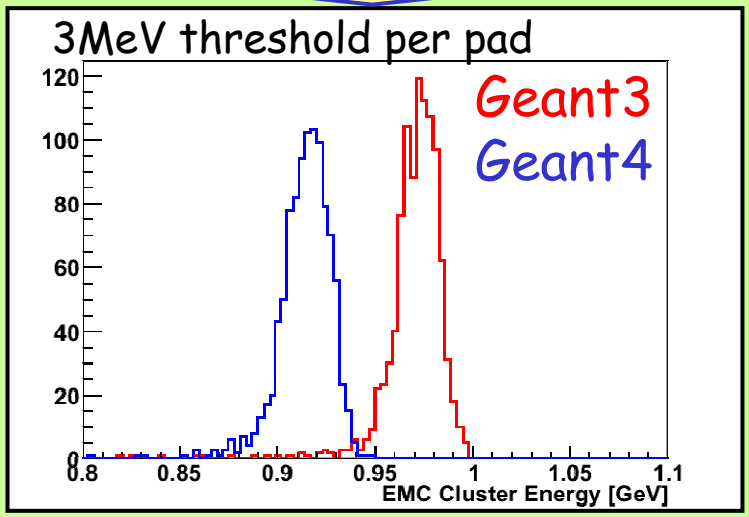

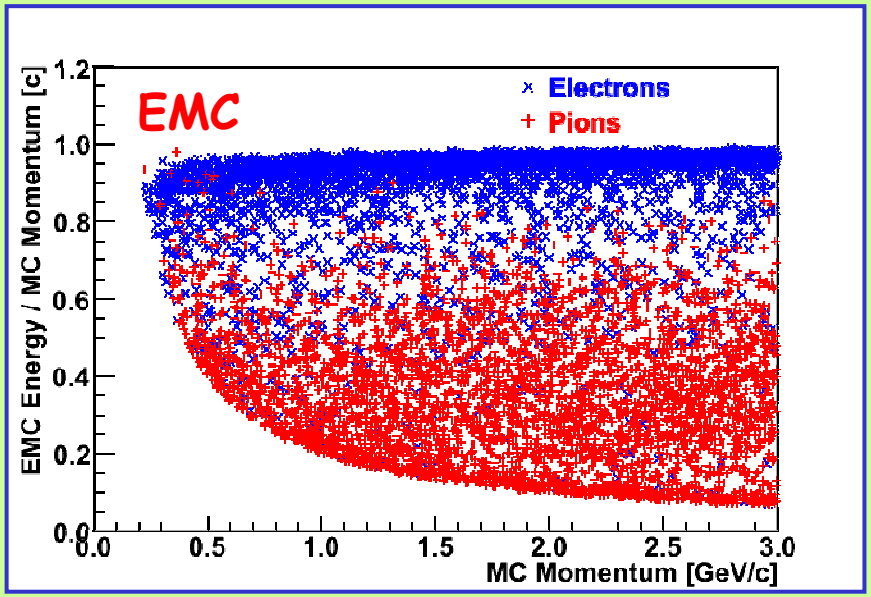

Next goal: PID

Match tracks with PID detectors

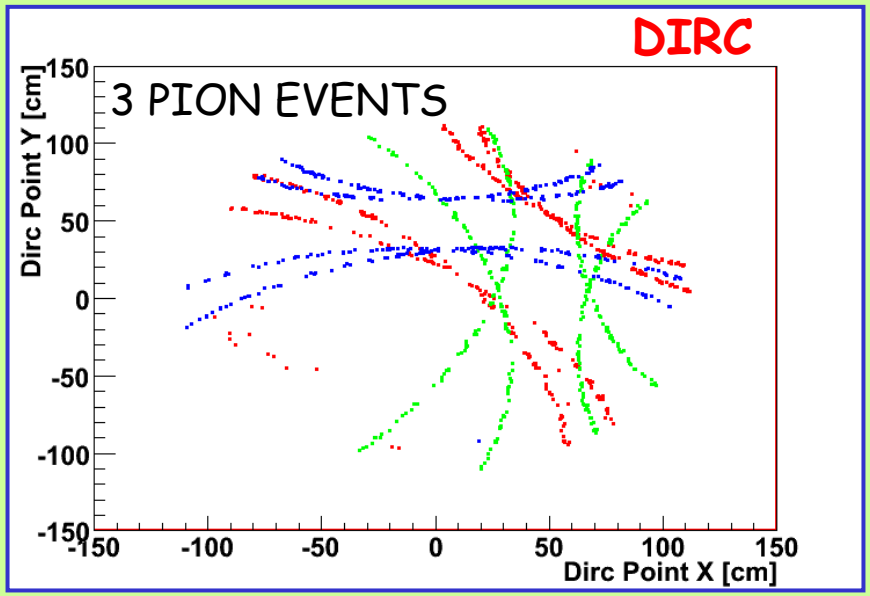

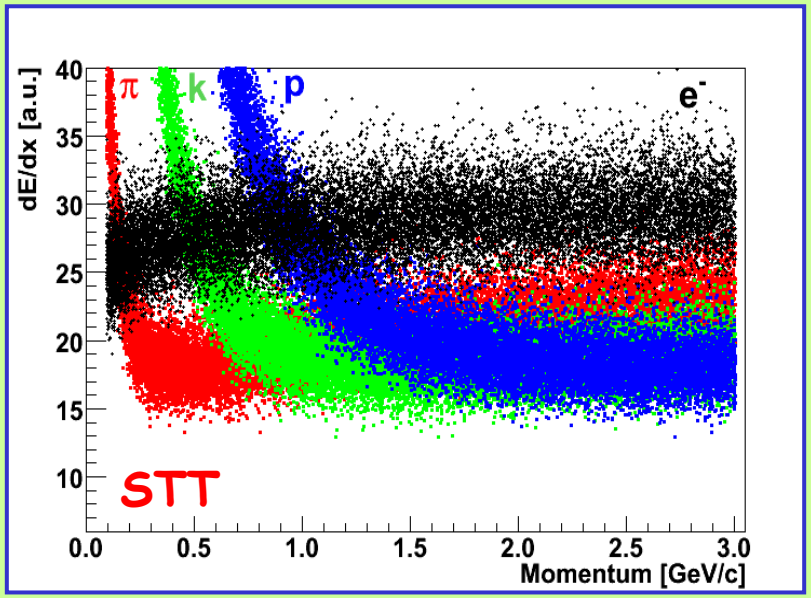

Summary

PandaRoot is now the framework for the Panda full simulation

Features:

- Supported and maintained for many Linux/compiler versions
- Several event generators for different physics studies
- Virtual MonteCarlo -> comparison Geant3, Geant4 (Fluka)

Implementations (after one year):

- Spectrometer geometry almost complete
- Full reconstruction for many detectors (EMC, STT, TPC, MVD)
- Global tracking: ongoing (Kalman + GEANE)

To-do list:

- Complete global tracking
- Construct the Particle Identification information