Development of X-band 50MW klystron in BVERI

Beijing Vacuum Electronic Research Institute (BVERI)

Project goals

Frequency	Accelerated gradient	Developed institutes
S band	~20MV/m	Widely used
C band	~40MV/m	KEK、SPring-8、PSI、SPARC
X band	~65MV/m	SLAC、KEK、CERN、Tsinghua University (Beijing)
30 GHz	~100MV/m	CERN

Shanghai Institute of Applied Physics, CAS
X band Accelerated unit

BVERI
Developing X band 50MW Klystron

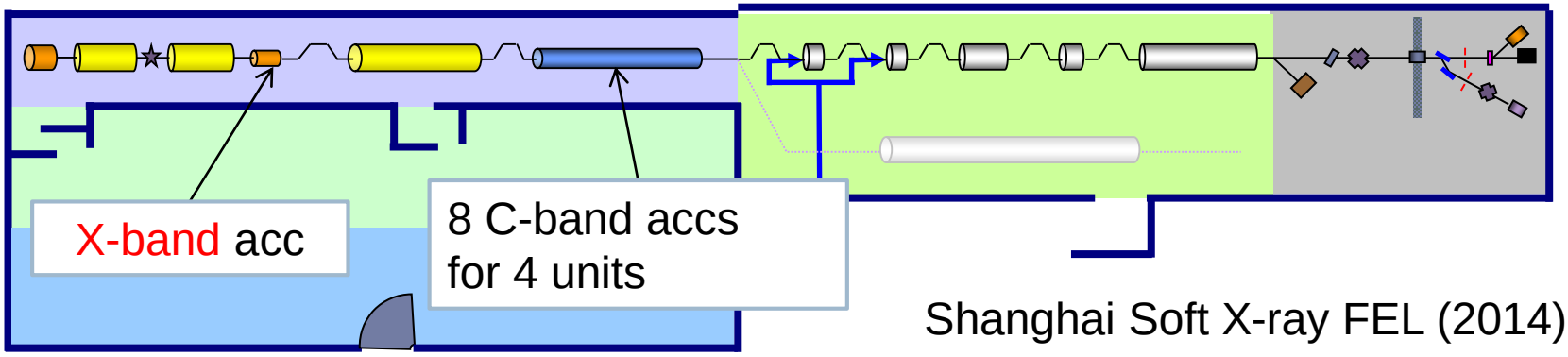

Shanghai Soft X-ray FEL (2014)

High peak power klystron products

f: S band
P_{op}: ≥5.5MW
η: ≥45%
U: ≤140kV
Solenoid focused

f: X band
P_{op}: ≥2.6MW
η: ≥45%
U: ≤100kV
Solenoid focused

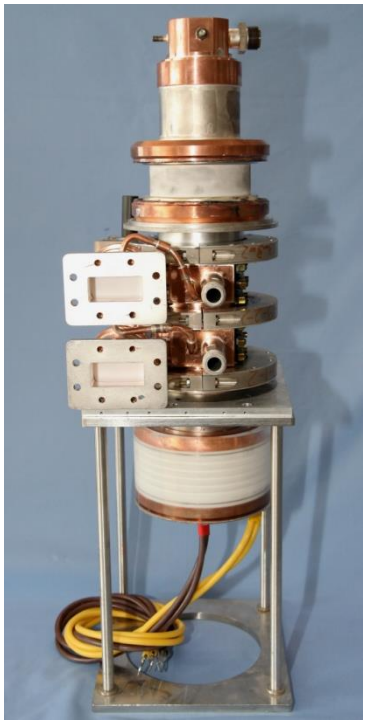

f: C band
P_{op}: ≥3MW
η: ≥43%
U: ≤50kV
Permanent magnetic
Multi-beam

Design Parameters

Parameter	Value
Frequency	11.424GHz
Peak output power	≥50MW
Duty	0.018%
RF pulse width	≥1.5μs
Gain	≥50dB
Efficiency	≥40%
-3dB bandwidth	≥30MHz
Beam voltage	450 KV ~ 470KV
Beam current	≤250A
Modulating manner	Cathode modulating
Focusing manner	PPM or solenoid
Input manner	WR90 waveguide or coaxial-line
Output manner	Vacuum circularity waveguide

Technical proposal

Analysis of parameter:

High beam voltage	DC breakdown
High Peak output power	RF discharge

Key technology:

High transmission(≥98%) electronic optics system	Electron gun design
	Focusing system design
High efficiency(≥40%) RF system	Second harmonic bunching
	Travel wave output section
High Peak power(≥50MW) transmitting instruction	Higher mode microwave transmitting
High reliability	Decreasing secondary electron emission

Whole design

2 focusing manner: PPM & Solenoid

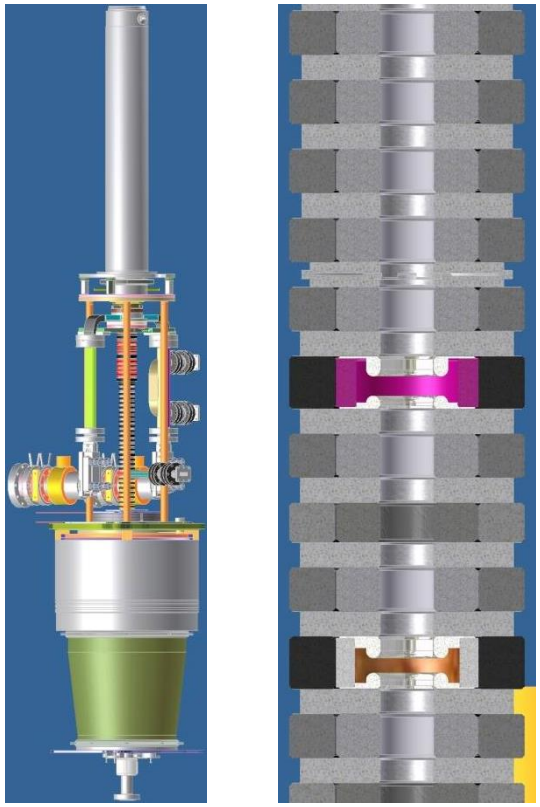

PPM

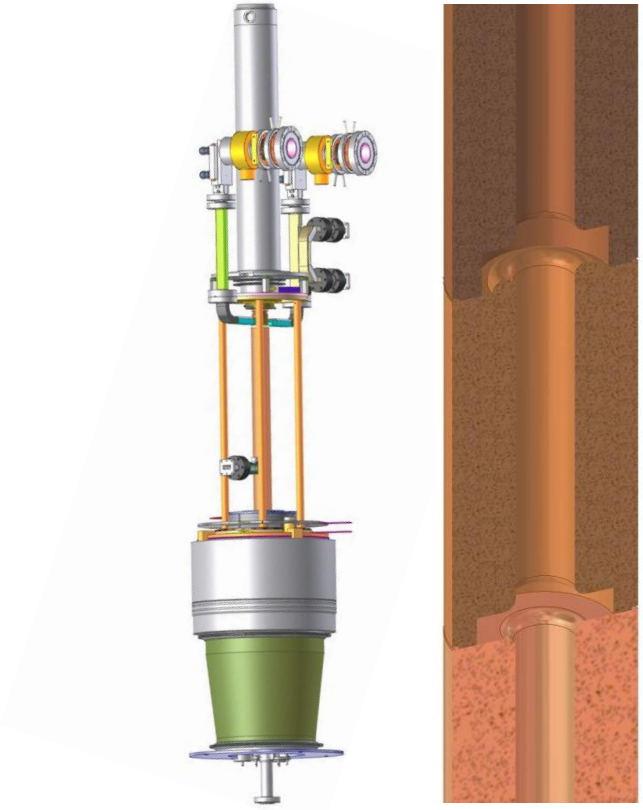

Solenoid

Electron gun

To reduce cathode load(8.3A/cm^2)

Diameter of cathode：Φ56.6mm

Diameter of beam tunnel：Φ9.53mm

Electron beam compression ratio：140

Part immersed flow gun

To avoid scalloping the beam

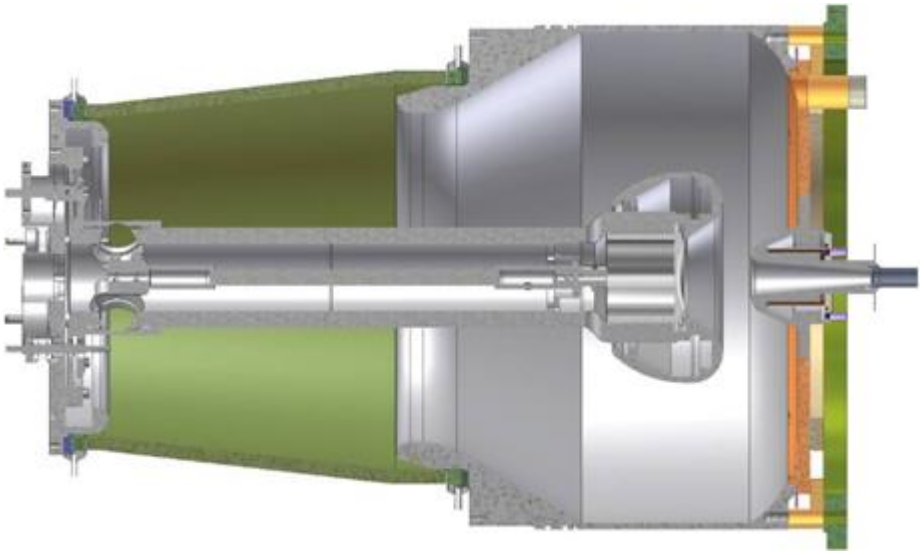

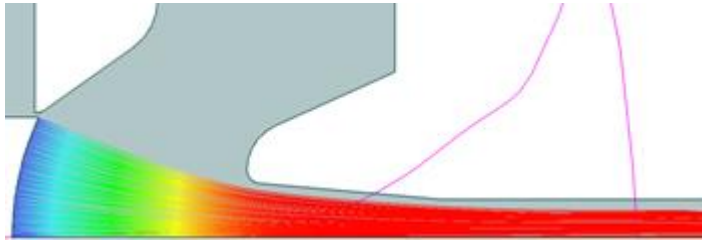

PPM

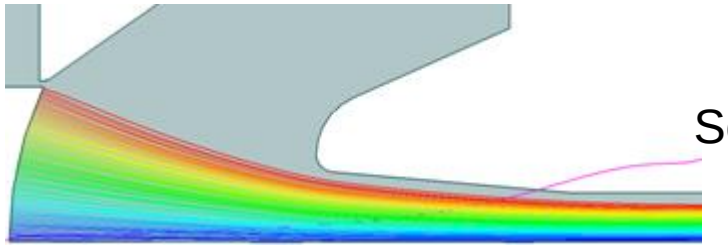

Solenoid

Electron gun reliability

The maximal electric field intensity in electron gun: 24kV/mm

Gold-copper solder, to decrease saturated vapor pressure

Coating TiN or Cr_2O_3 on ceramic, to restrain gliding spark discharge

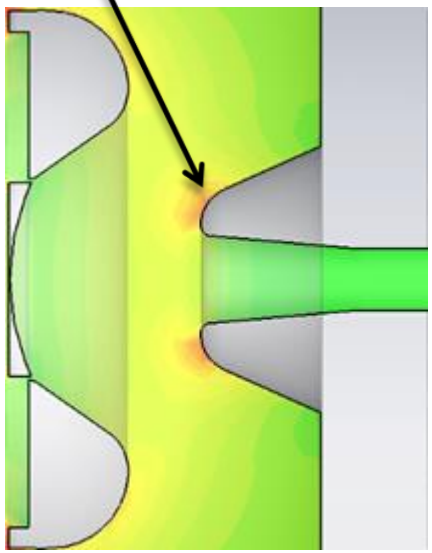

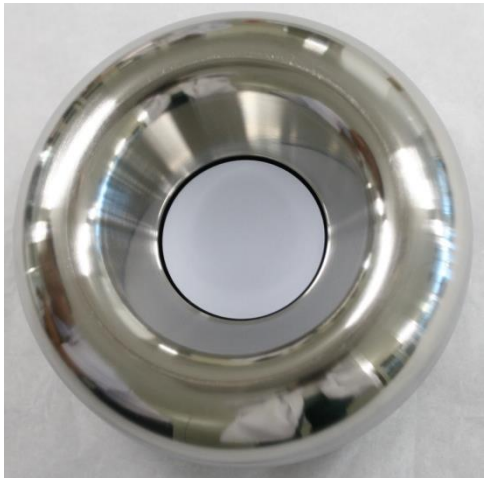

Electron gun reliability

Anticorona ring, to restrain corona discharge

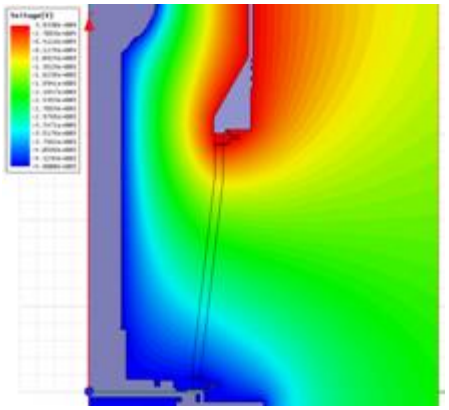

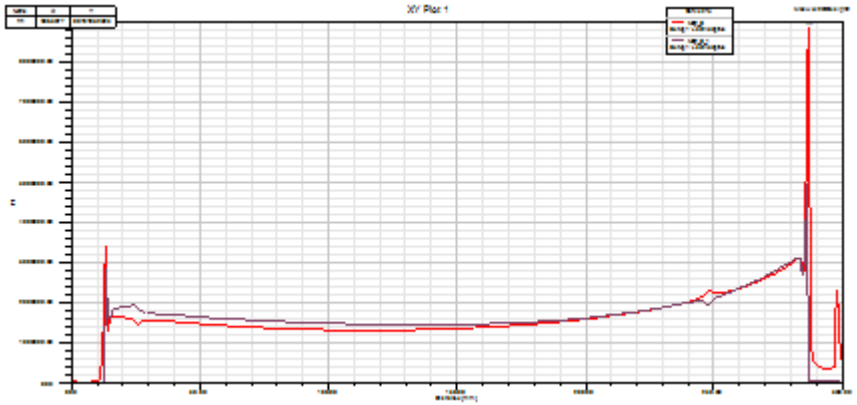

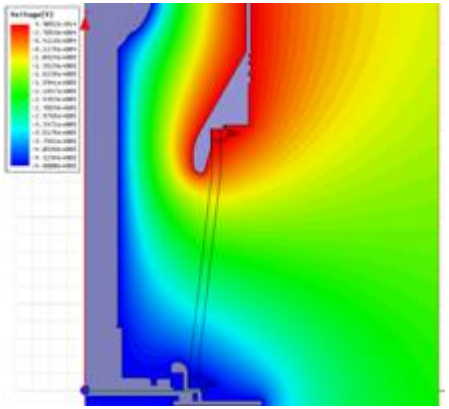

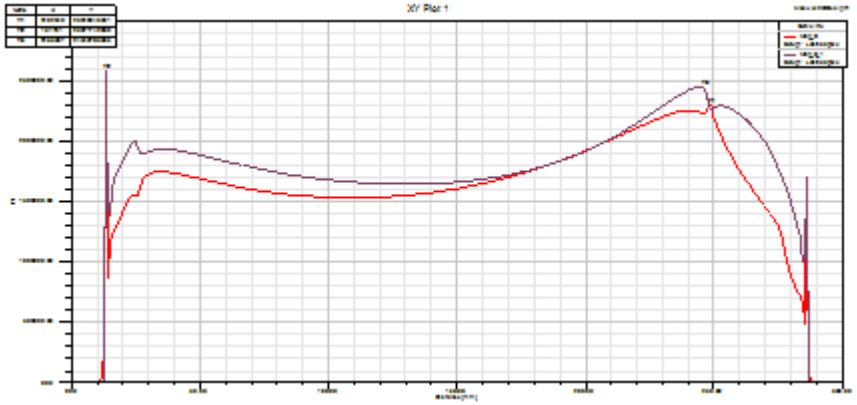

PPM focusing system

- Dynamic transmission over 98%
  - Low harmonic component
  - Low transverse component
  - Prevent saturation of magnetic flux density
  - Low critical voltage
  - Remain high transmission under voltage shifting or fluctuating

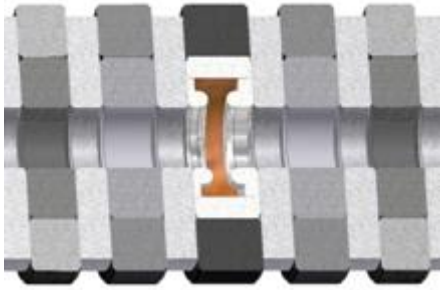

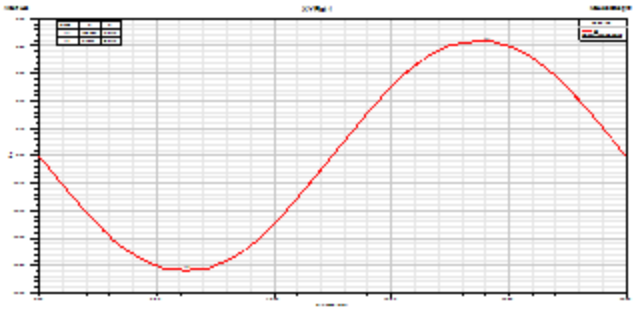

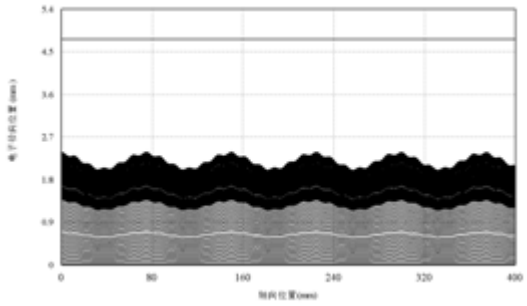

460kV

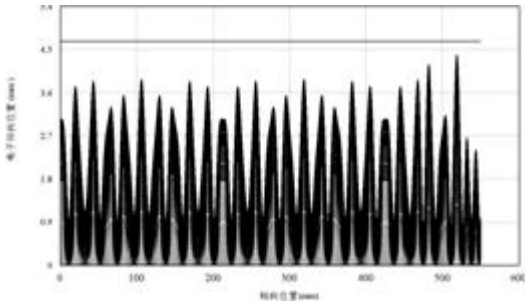

50kV

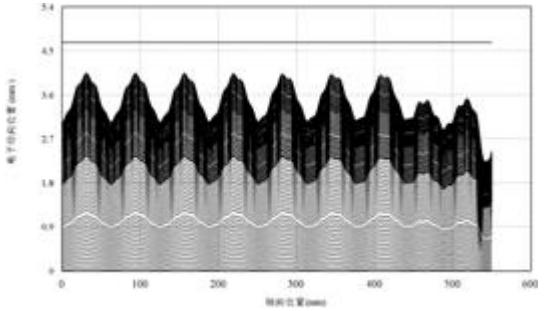

550kV

Solenoid focusing system

- Remote control
- High transmission
- High reliable
- Long lifetime
- Easy to fabricate

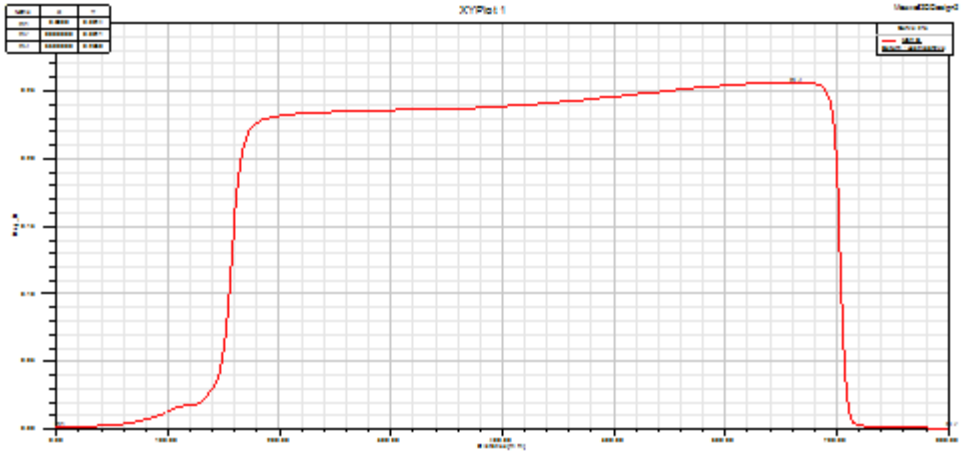

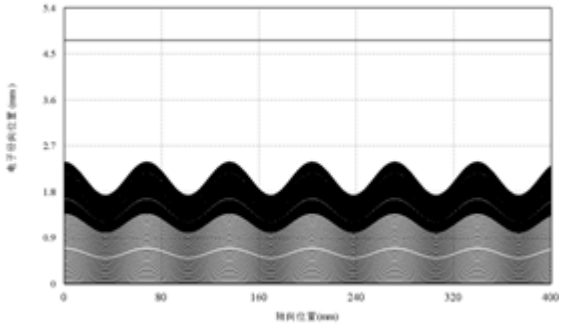

460kV

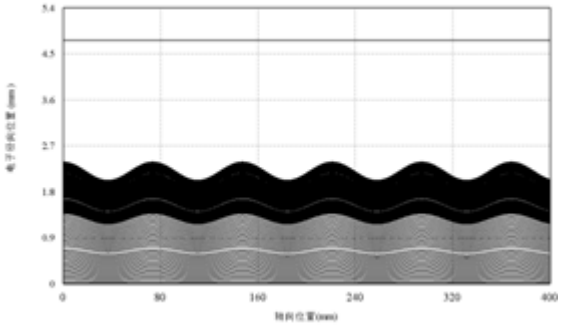

550kV

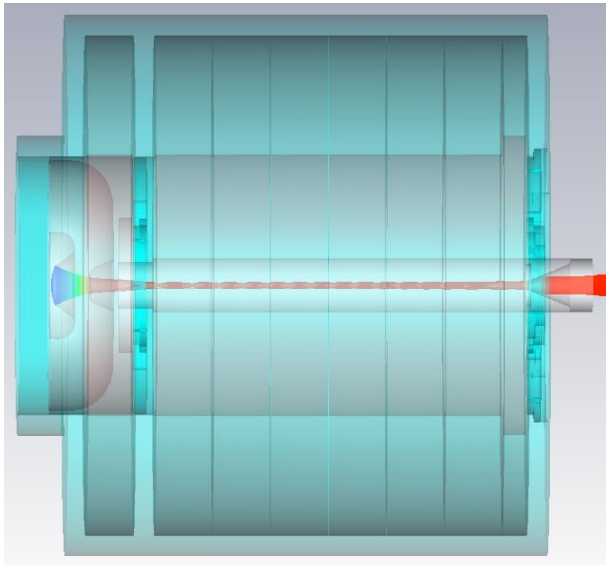

RF system

Fundamental mode, high R/Q

Long drift tube, to realize second harmonic bunching

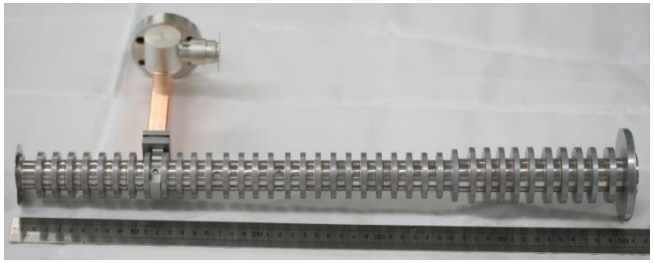

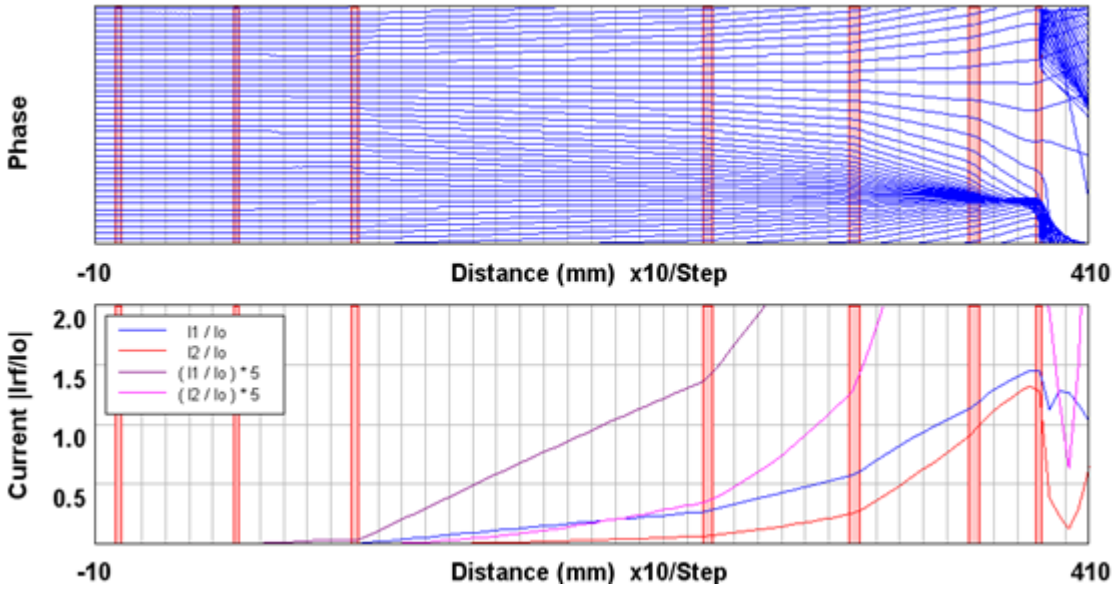

RF system

- Output section: disc-loaded circuits
- Lower high frequency field
  - Increase interaction efficiency
  - high transmission with axisymmetric structure
  - optimization
    - Phase velocity & impedance tapered
    - Two waveguide output

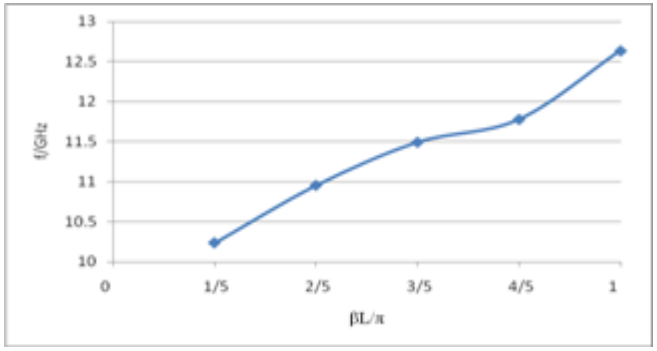

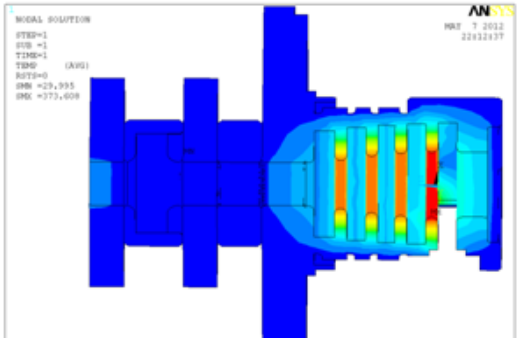

Thermal analysis :
peak-temp ~175℃

RF system

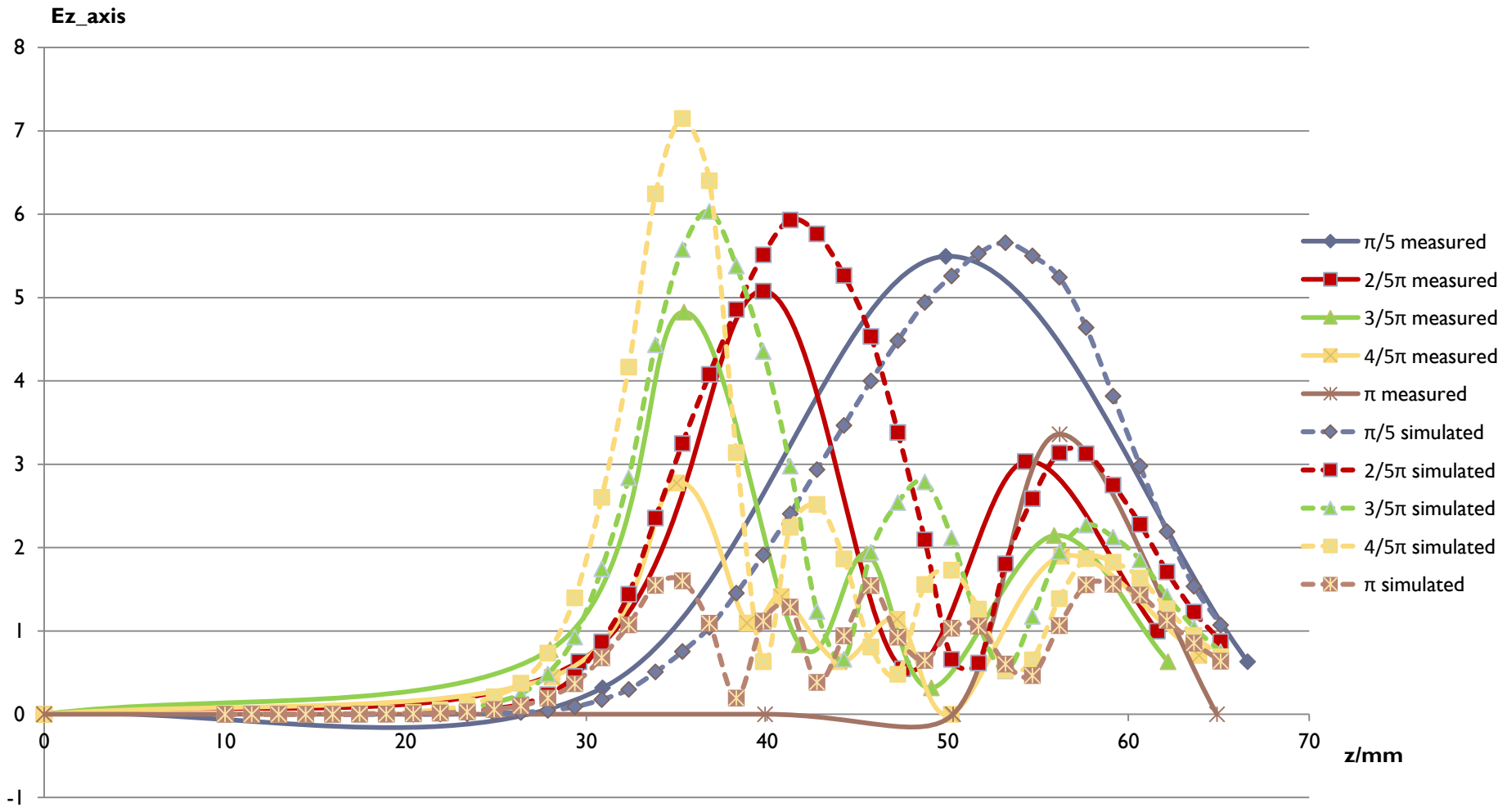
Ez_axis
8
7
6
5
4
3
2
1
0
-1
0
10
20
30
40
50
60
70
z/mm
π/5 measured
2/5π measured
3/5π measured
4/5π measured
π measured
π/5 simulated
2/5π simulated
3/5π simulated
4/5π simulated
π simulated

High-peak power output

variety of window	maximal E at the surface of ceramic disk	relative bandwidth @VSWR≤1.1
pillbox window	13MV/m	29.2%
rectangular waveguide window	20MV/m	1.8%
rectangular waveguide window with irises	12.5MV/m	14.3%
TE_{01} standing wave window	7.9MV/m	1.5%
TE_{01} travelling wave window	4.4MV/m	3.0%

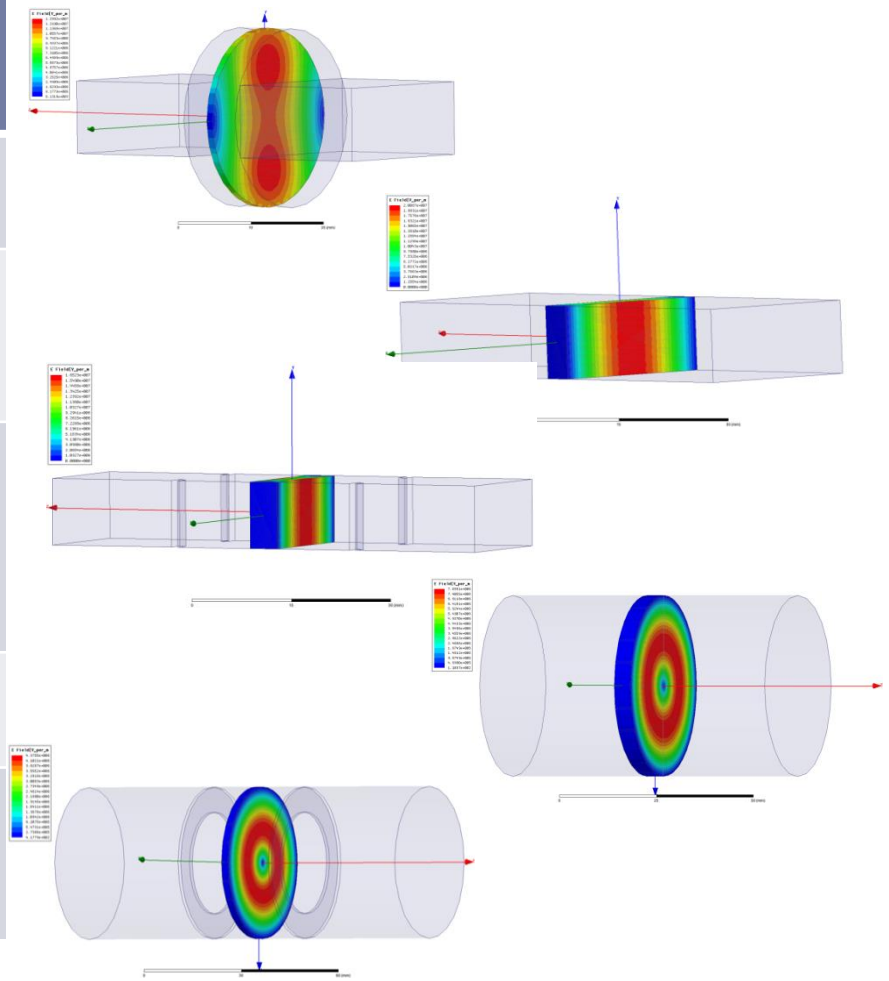

High-peak power output

TE_{01} circular waveguide travel-wave window

structure

- a ceramic disk $\lambda_g/4$ in thickness
- 2 symmetrical irises at both sides

feature of E distribution

- the ceramic disk at the position of wave node
- 2 wave loops in between ceramic disk and irises

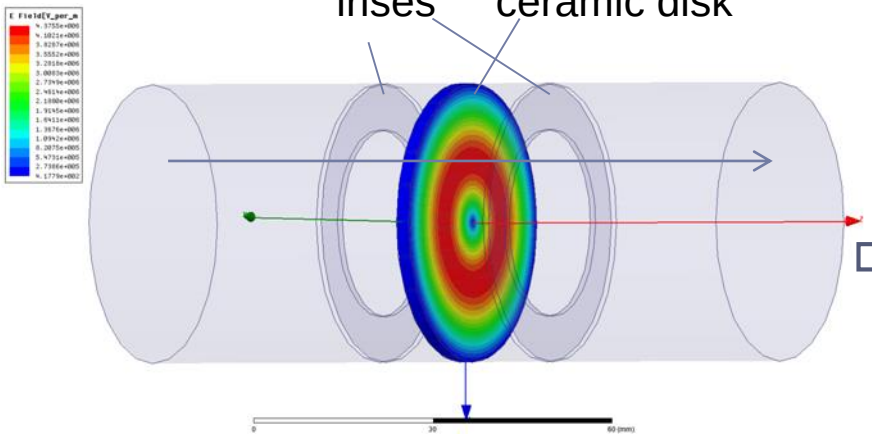

E distribution

E (V/m)
(at R=0.48a)

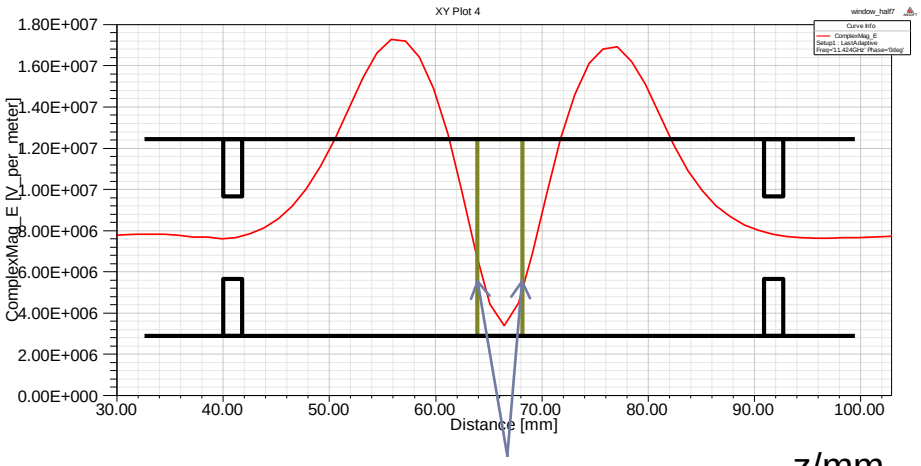

4.4MV/m

z/mm

High-peak power output

- TE_{01} circular waveguide travel-wave window
  - 11.38~11.45GHz,VSWR≤ 1.05
  - losses≤0.39%
  - Evaporation TiN or Cr_2O_3

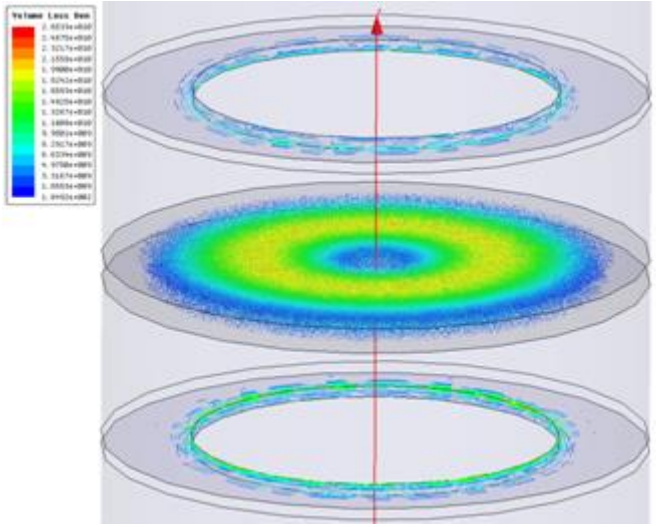

Peak temp: ~93℃

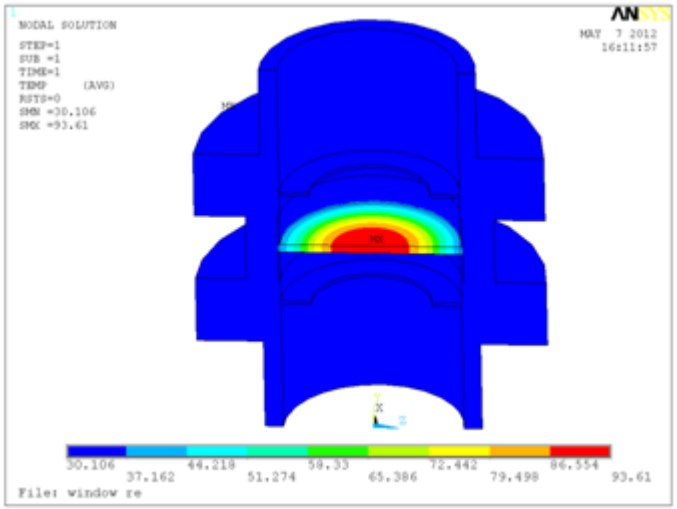

High-peak power output

- Mode converter
  - TE_{10} rectangle to TE_{01} circular
  - 11.39~11.46GHz, VSWR≤1.1
  - losses≤0.4%
  - Aperture Evaporation Cr_2O_3
  - structure
    - 1 rectangular waveguide
    - 2 rectangular waveguides
    - 4 petal-shape coupling apertures
    - mode suppresser
    - circular waveguide

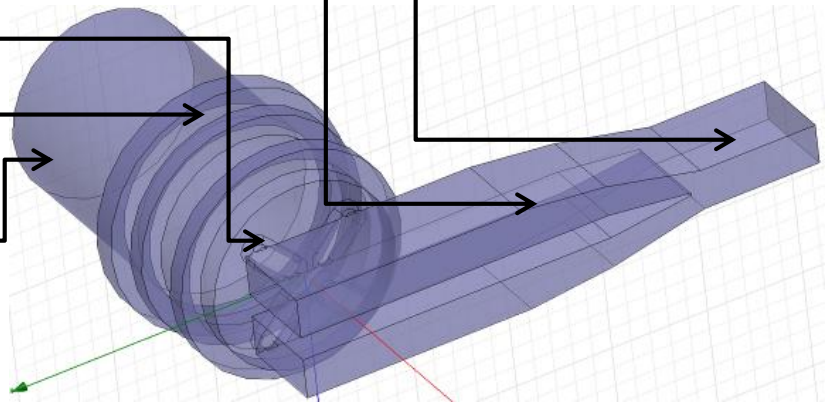

High-peak power output

- Reliability analysis of mode converter
  - Aperture field: 31kV/mm
  - polished
  - Increase vacuum degree
  - Peak temperature ~160℃

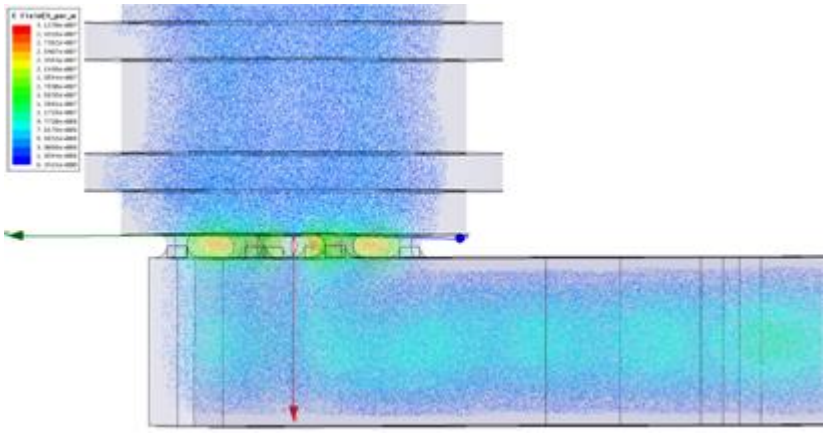

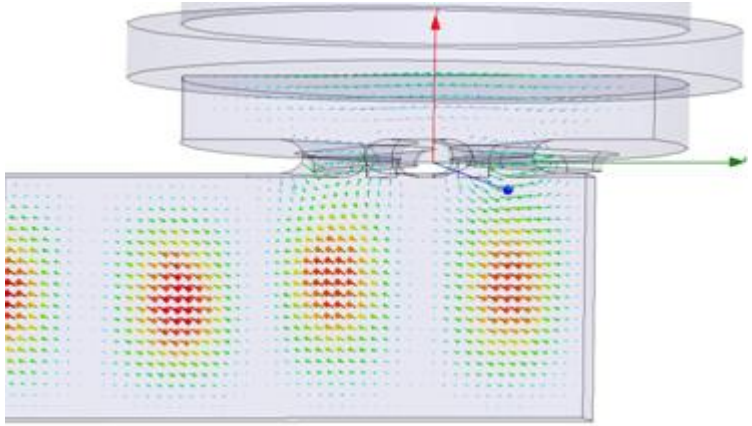

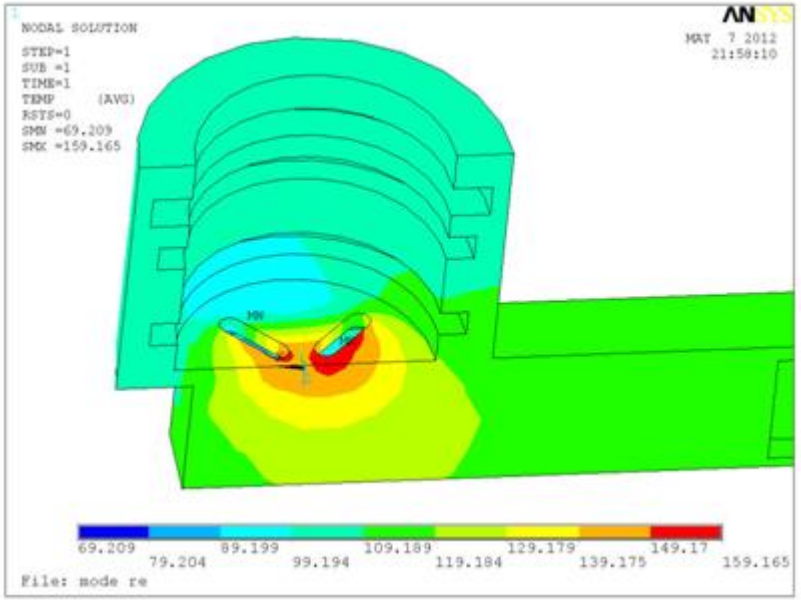

Liquid cooling collector

- High heat transfer coefffcient
- Power density :
  peak 65W/cm^2,
  average 36W/cm^2
- Protruding ring, to decrease x-ray radiation
- Thermal analysis
  - PPM ~134 ℃
  - Solenoid ~127 ℃

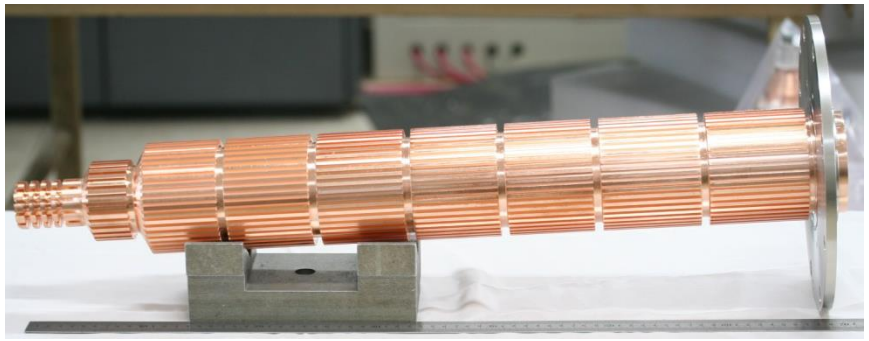

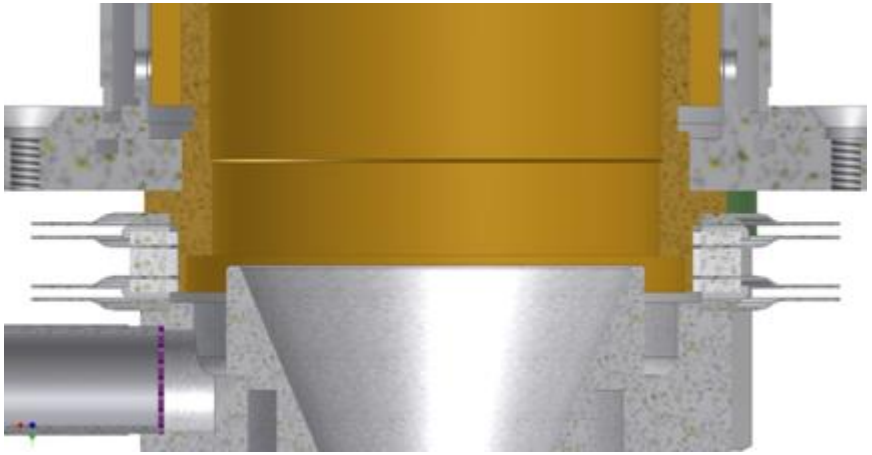

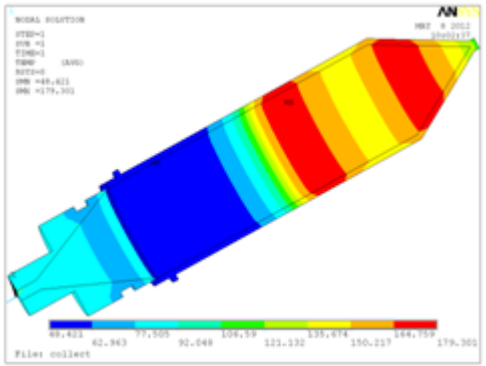

Current status & Schedule

In progress:

Cold-test of prototype

Cathode, filament and ceramic ring

Test system

Next:

2015.12	experiment tube (1 for each focusing manner)
2016.6	prototype tube (2 for each focusing manner)
2016.12	small-mass production

CETC 12

Thank you