Supported by:
Federal Ministry for Economic Affairs and Energy
on the basis of a decision by the German Bundestag

AMPACITY
Smart grids for the city

Projektträger Jülich
Forschungszentrum Jülich

State of the Art on HTS Power Cable Systems and Cable Cryostats – The AmpaCity Project

Rainer Soika, Mark Stemmle – Nexans Deutschland GmbH

Frank Merschel – RWE Deutschland AG

Grenoble, June 5, 2015

VORWEG GEHEN
Nexans
KIT Karlsruhe Institute of Technology

Agenda

> Part 1: The AmpaCity Project

- AmpaCity Project Overview
- Technical Characteristics and Type Testing
- Installation, Commissioning, Operation

> Part 2: Flexible Superconducting Cable Cryostats (Cryoflex®)

- Requirements for Superconducting Cable Systems
- Flexible Cryostat Development and Service History

AmpaCity Key Parameters

- **10 kV, 40 MVA three-phase HTS system**
  - **1 km long HTS power cable rated at 2.3 kA**
  - **Resistive HTS fault current limiter**
- **Cable joint halfway between substations**
- **‘Closed loop’ LN2 refrigeration system**
- **Operating temperature ~ 70 K**
- **Funded by the German Federal Ministry of Economics and Technology**

AmpaCity Project Objectives

- **Installation of HTS system in the German City of Essen**
- **Investigation of technical feasibility of HTS systems in distribution grids**
- **Investment comparison of 10 kV HTS systems as alternative to conventional 110 kV systems**
- **Evaluation of technical operation advantages**
- **Assessment of further HTS cable and FCL technology applications**

Project Team and Responsibilities

> RWE

- Specification of HTS system to be installed in distribution grid
- Field test of HTS system connecting two substations

> Nexans

- Development of HTS cable including type test of all components
- Manufacturing of HTS cable system and HTS fault current limiter

> KIT

- HTS tests and characterization
- AC loss measurements and modeling (FEM 2D and 3D)

Motivation

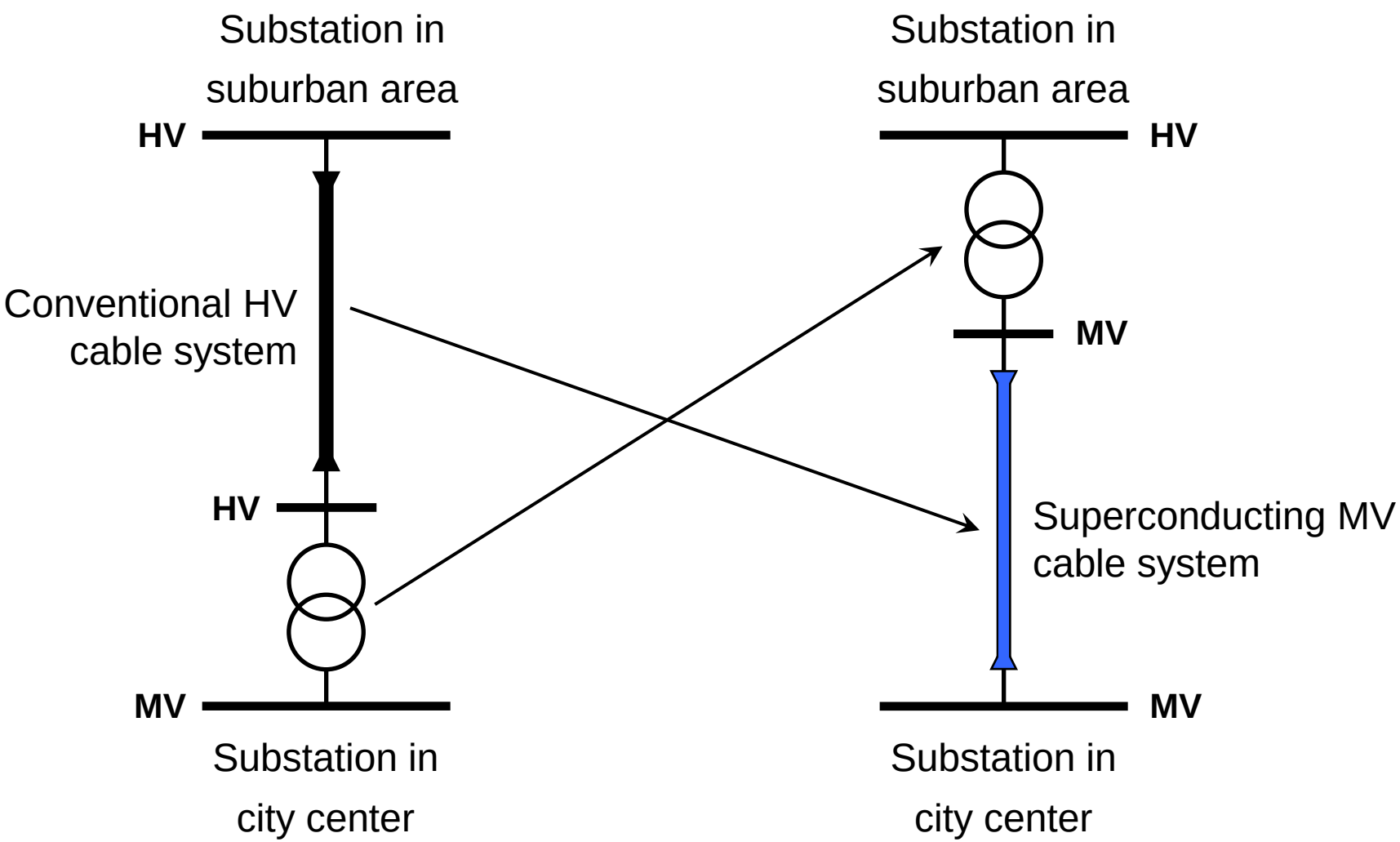
Substation in
suburban area
HV
Conventional HV
cable system
HV
MV
Substation in
city center
Substation in
suburban area
HV
MV
Superconducting MV
cable system
MV
Substation in
city center

Previous Electrical Configuration

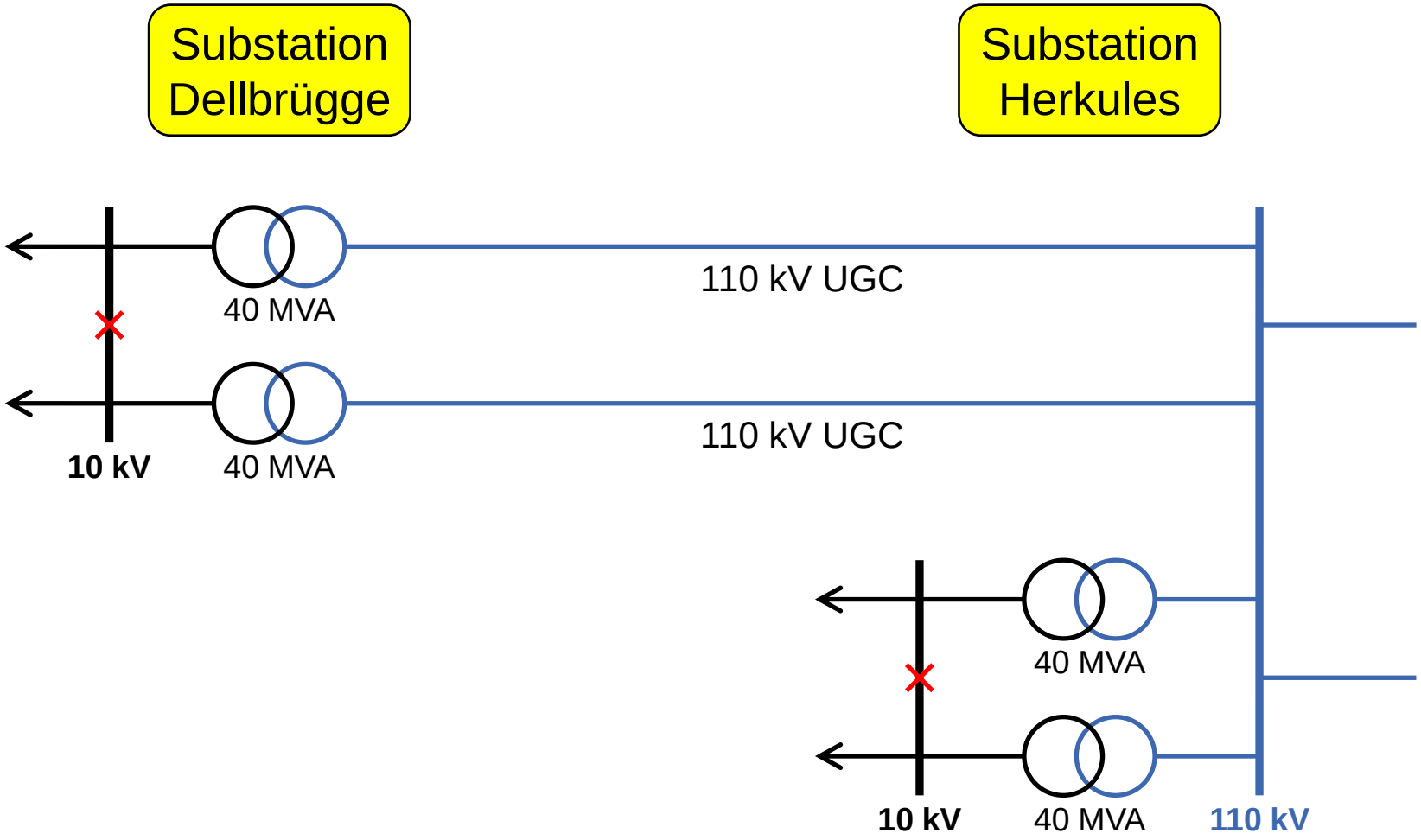

Electrical Configuration with Superconducting System

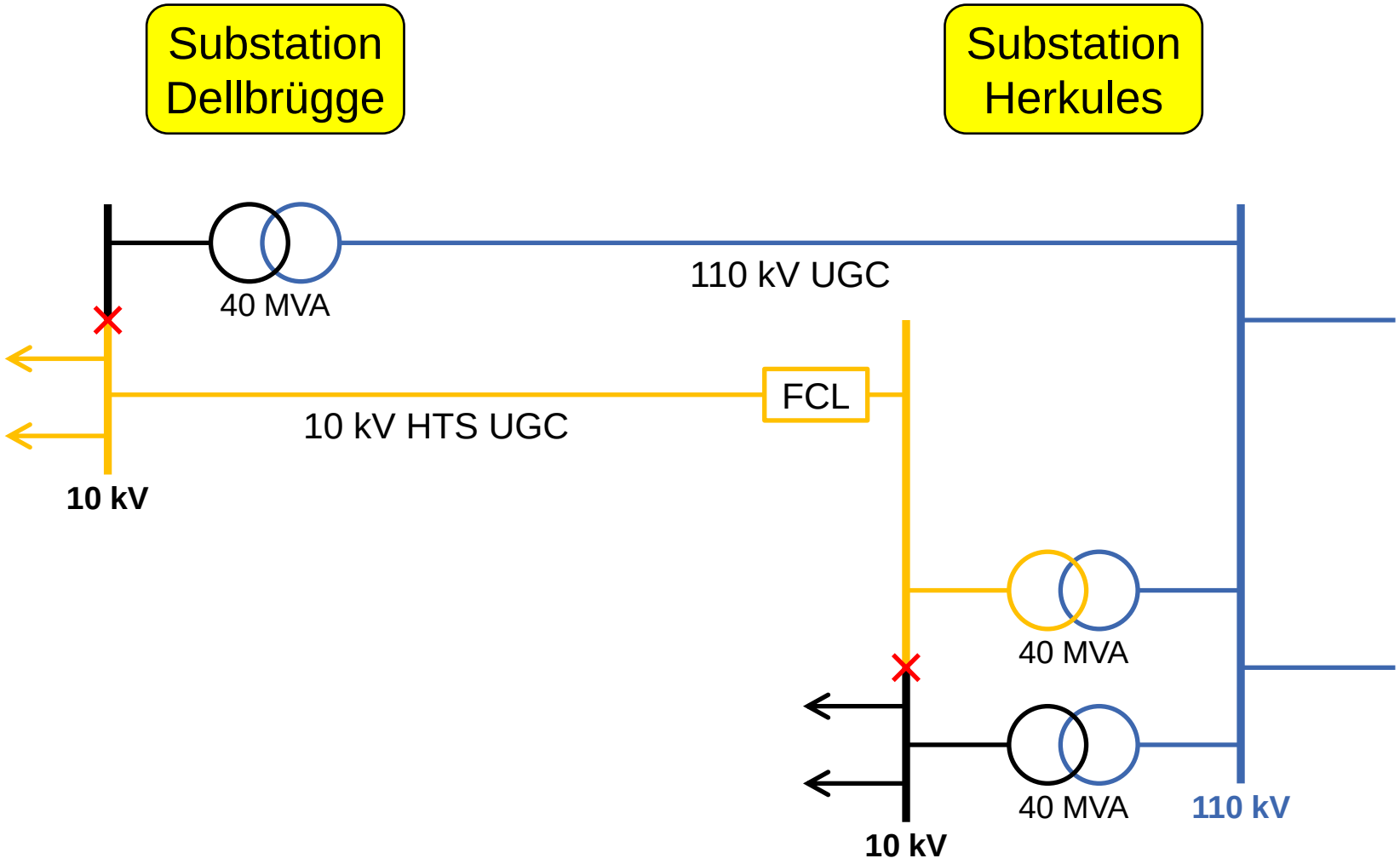

AmpaCity Installation in Essen, Germany

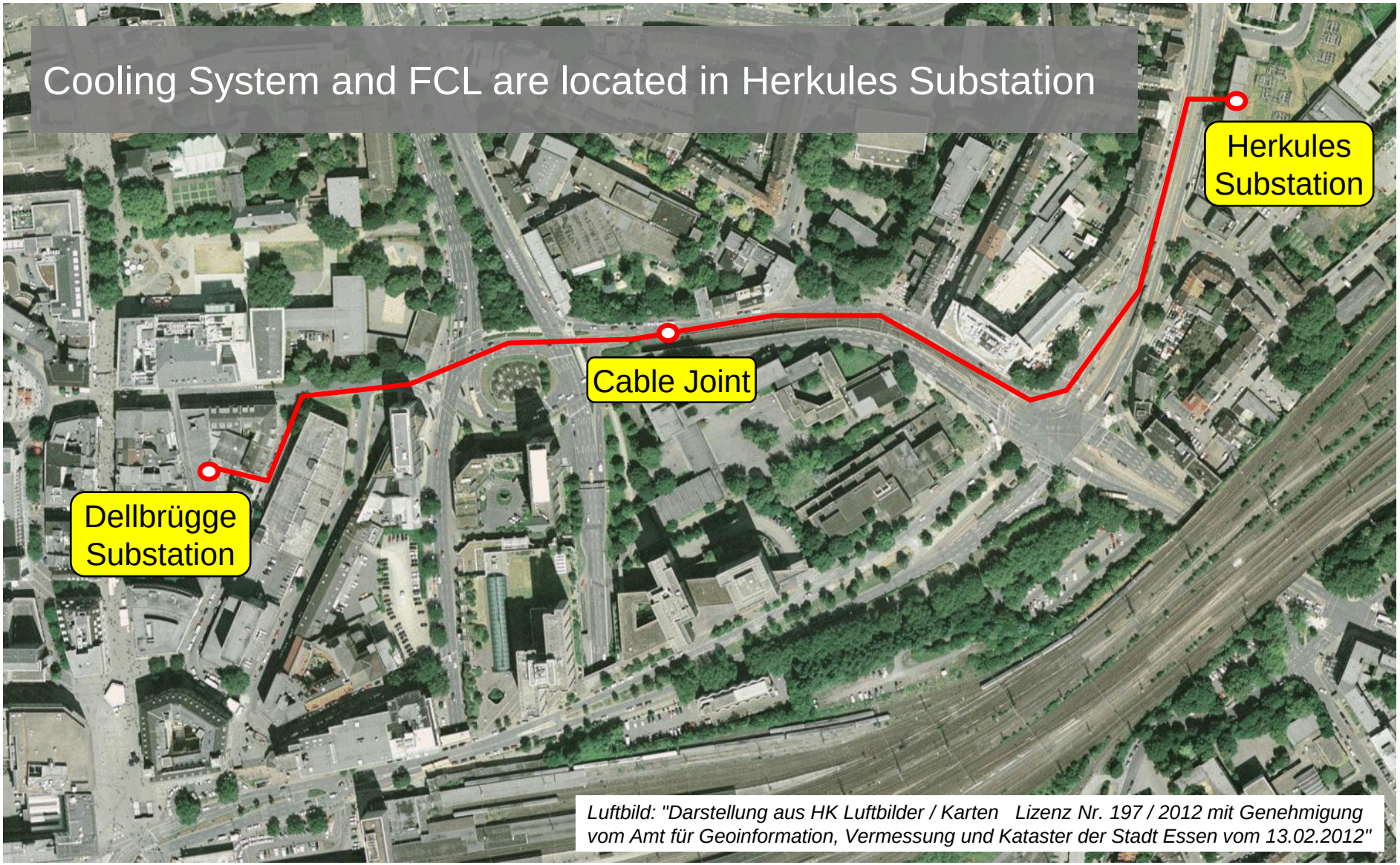

Substation Herkules

Substation Dellbrügge

Cable Design

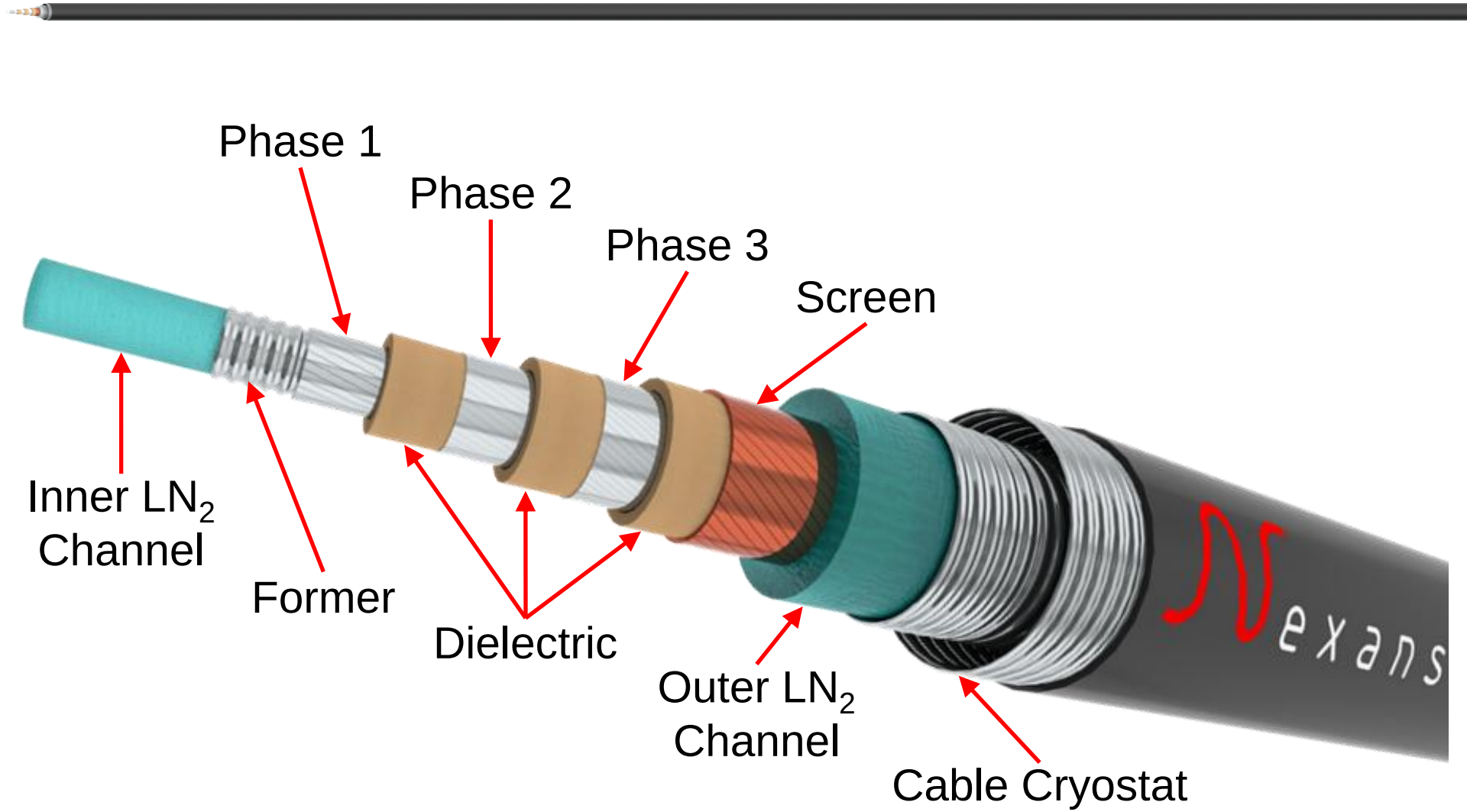

Termination Design

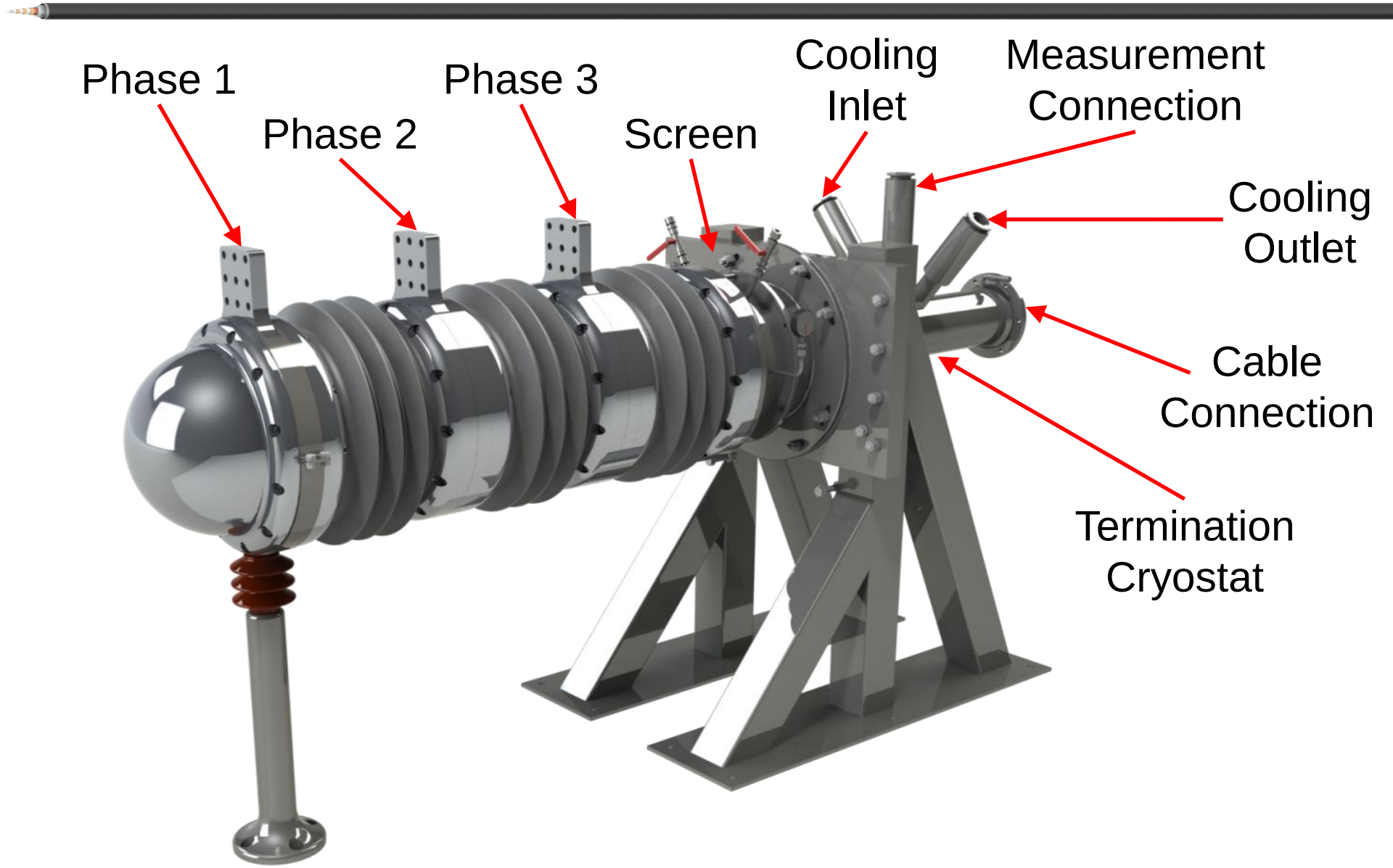

Fault Current Limiter Design

Parameter	Value
Rated power	40 MVA
Rated voltage	10 kV
Rated current	2.3 kA
Lightning impulse withstand voltage	75 kV
Power frequency withstand voltage	28 kV
Prospective peak short circuit current	50 kA
Prospective short circuit current	20 kA
Limited peak short circuit current	< 13 kA
Limited short circuit current	< 5 kA
Limitation time	100 ms

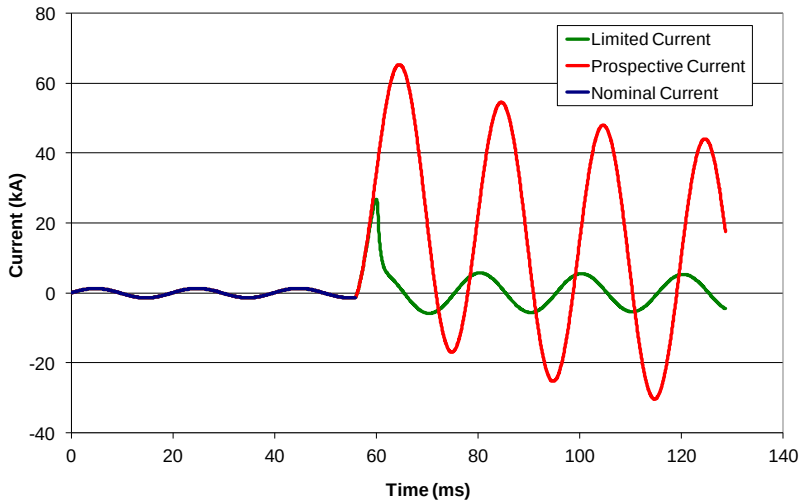

Cooling System Design

- 4 kW cold power at 67 K
- Subcooled pressurized nitrogen
- Forced flow in closed circuit
- High availability and reliability

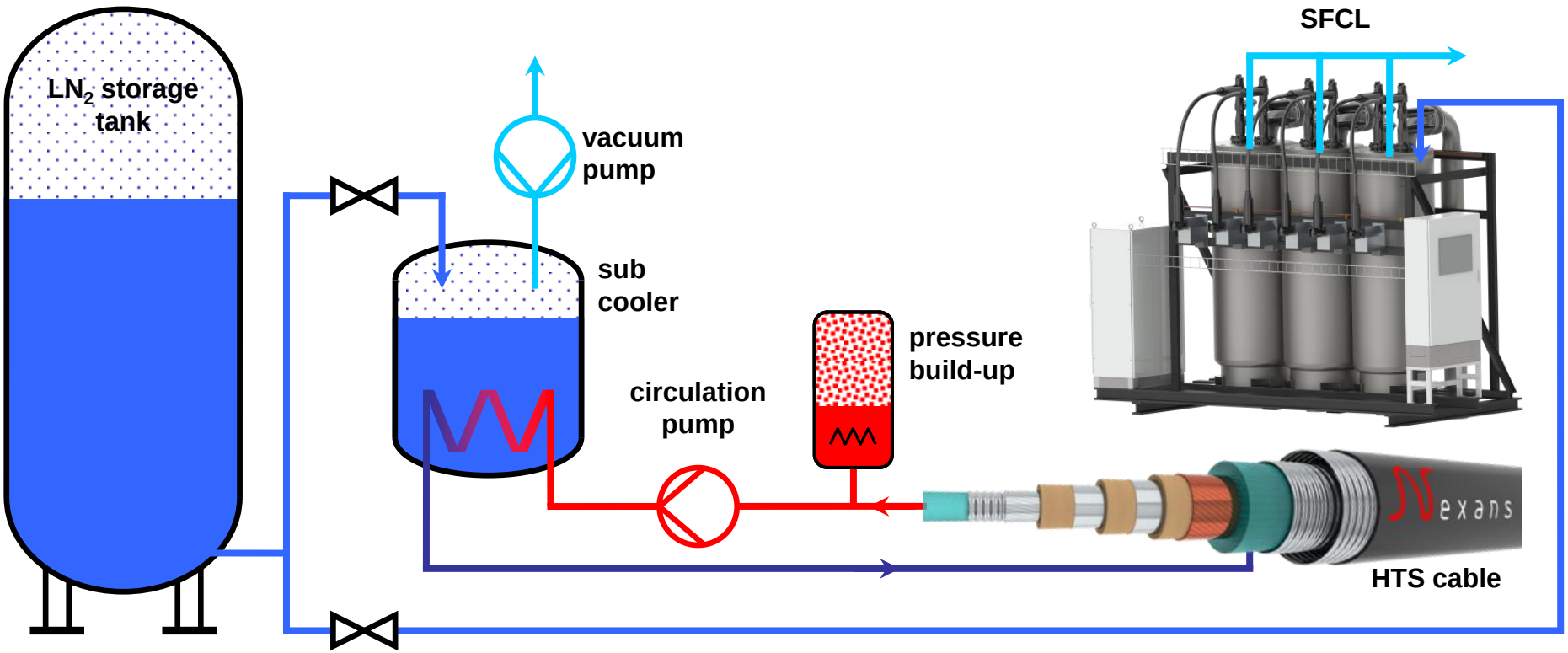

Type Test Sequence Prototype Setup

- Testing in accordance to DIN VDE 0276-620
- PD test at 20 kV (after 24 kV for 1 min)
- 20 load cycles with 2.3 kA (3 phase)
- PD test at 20 kV (after 24 kV for 1 min)
- Lightning impulse test at ± 75 kV
- AC voltage withstand test at 30 kV (4 h)

Prototype Setup for Type Test

Prototype Joint and Termination

Loading of Cable Drum in Hannover

Cable Drum Trailer at Joint Bay

Cable Pulling First Length

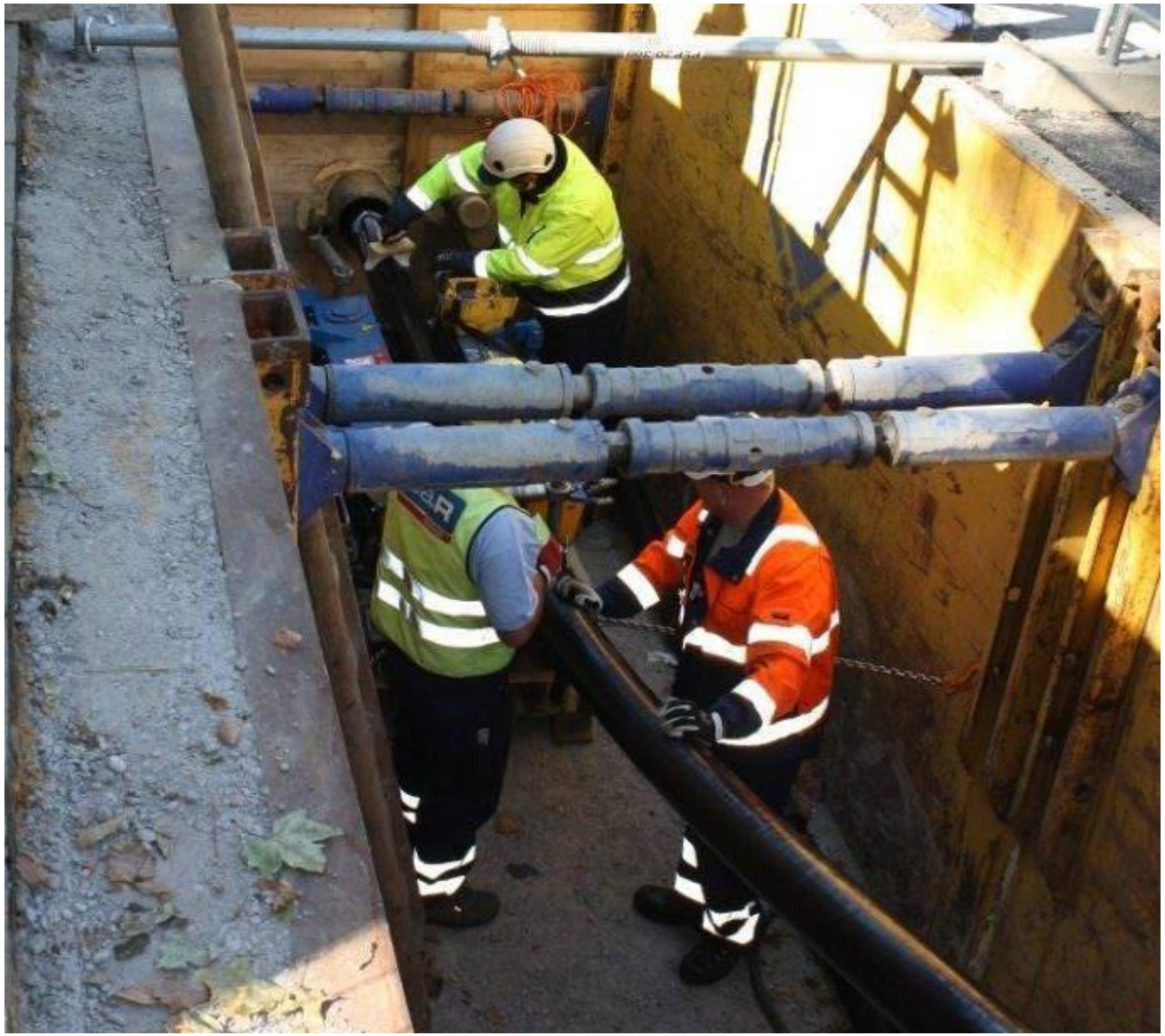

Installation in Substation Dellbrügge

Installation of Cable Joint

Commissioning Test

- Standard cable testing with cable test van
- PD test of each phase (20 kV at 0,1 Hz)
- Loss factor diagnoses (10 kV, 15 kV, 20 kV at 0,1 Hz)
- AC voltage withstand test (30 kV at 0,1 Hz for 1 h)

AmpaCity Milestones and Status

- ✓ Project start in September 2011
- ✓ Prototype manufactured in October 2012
- ✓ Type test completed in February 2013
- ✓ Start of component manufacturing in March 2013
- ✓ Groundbreaking ceremony on April 9th, 2013
- ✓ System installation on site Sept. until Dec. 2013
- ✓ Commissioning test on December 16th, 2013
- ✓ System commissioning on March 10th, 2014
- Pilot operation from 2014 until 2016 in progress

Supported by:

Federal Ministry
for Economic Affairs
and Energy

on the basis of a decision
by the German Bundestag

AMPACITY
Smart grids for the city

Projektträger Jülich
Forschungszentrum Jülich

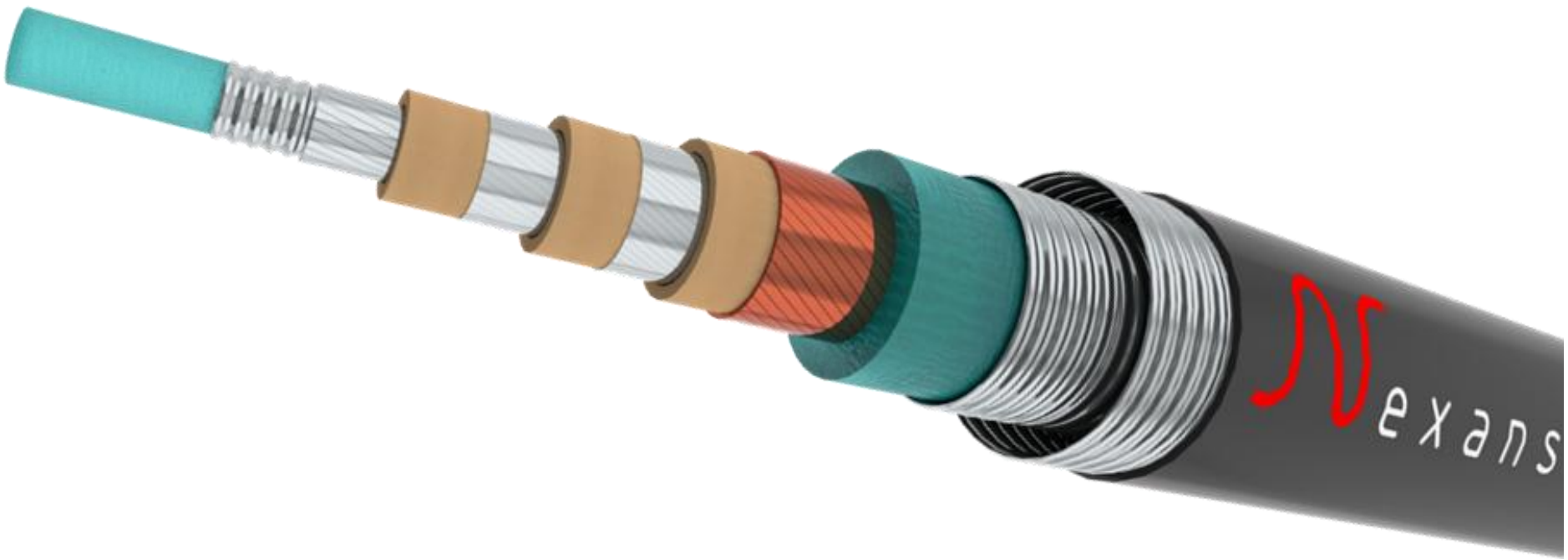

VORWEG GEHEN

nexans

Karlsruhe Institute of Technology

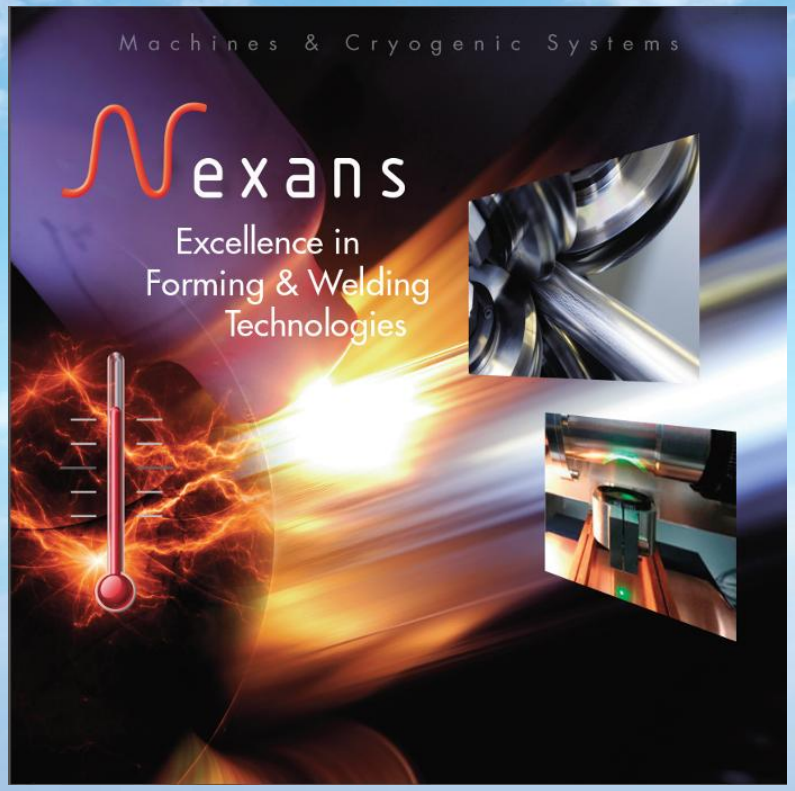

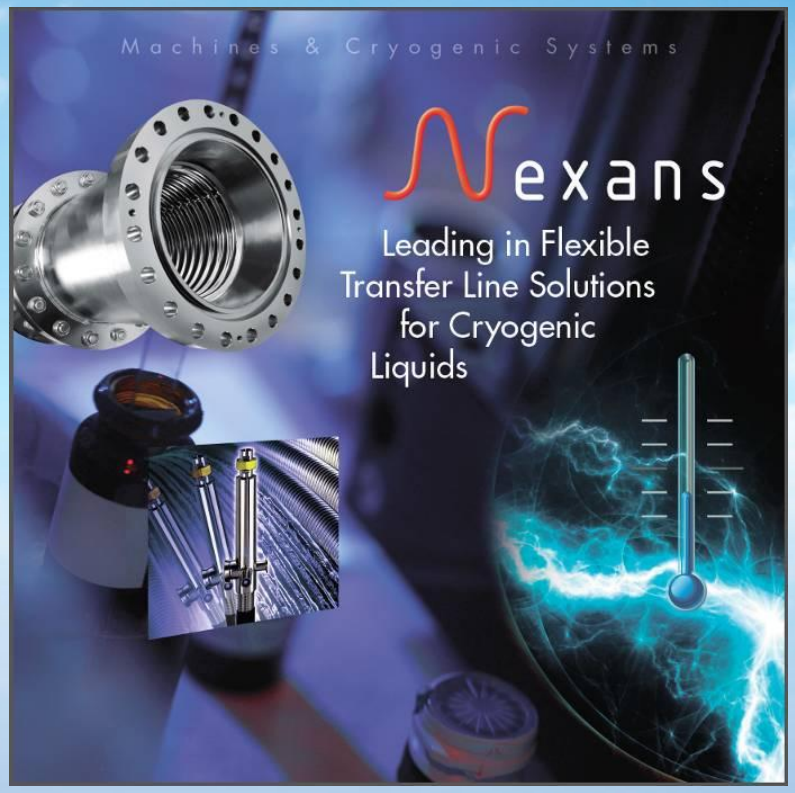

Machines & Cryogenic Systems

Cryoflex®

Superconducting cable cryostat <u>must</u> be bendable so it can be installed like a cable

Corrugation process results in a bendable (flexibe) tube

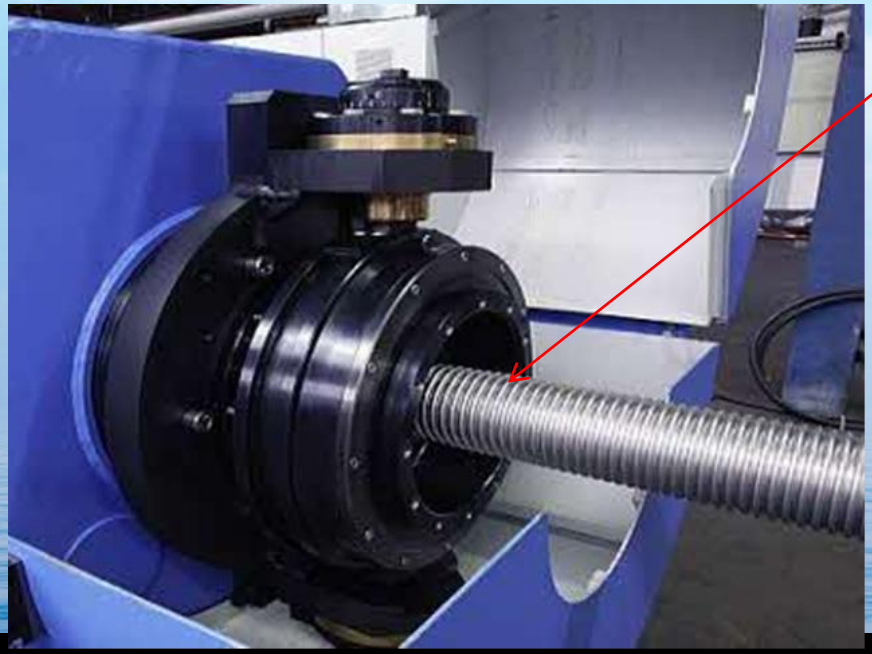

Additional requirements:

- Low heat inleak
- Long term vacuum
- Limited welding on site
- …

Brief Overview of Manufacturing Process

Longitudinal Welding

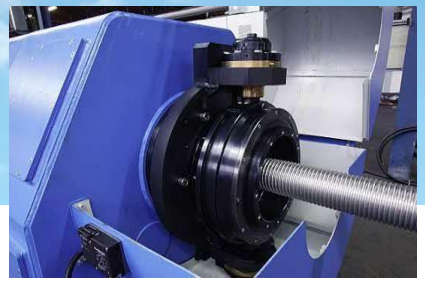

Corrugator

Superinsulation

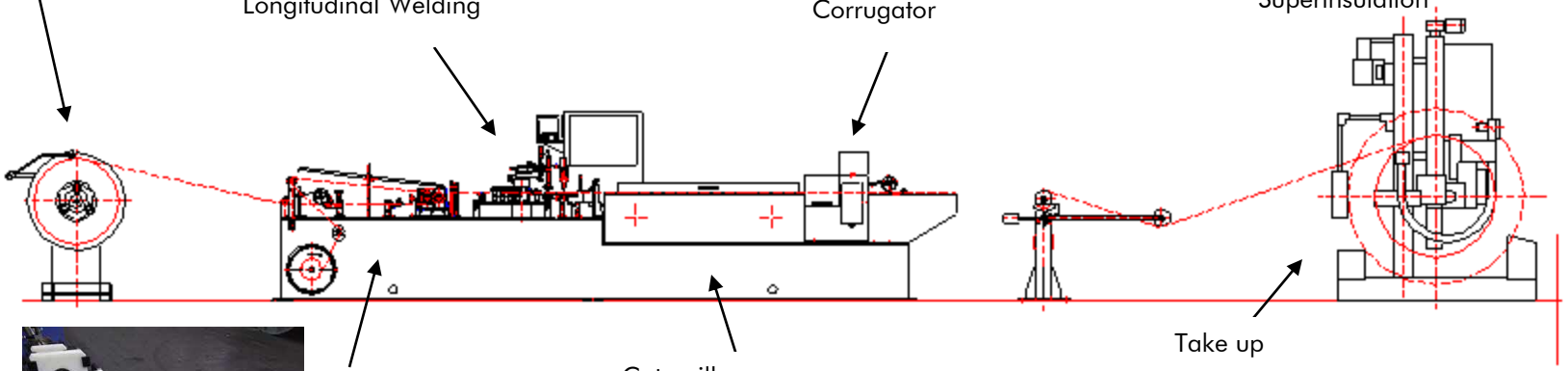

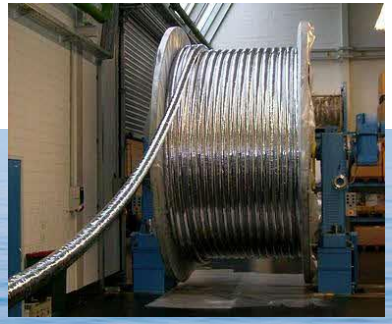

Cryoflex® Installation

Single flow channel, common in LN2 applications

Same design as HTS Power Cable Cryostat for LN2

1. Corrugated inner pipe
2. Spacer
3. Superinsulation
4. Vacuum space
5. Corrugated outer pipe
6. Jacket

CRYOFLEX® 2-tube design for Superconducting HTS Cables

Typical Diameters (mm):	60/110 … 100/163
Single piece lengths:	> 600 m for 84/143
Bending Radii (Single Bend) (m):	1,0 … 1,5
Heat Inleak (W/m):	1,2 … 2,0
Rated Pressure:	Up to 20 barg
Vacuum:	Long-term static, use of getter materials
Seals:	Permanent metal
Vacuum measurement port:	Spinning Rotor Gauge (if desired)

4-Tube Coaxial Transfer Line for liquefied gases

- Typical design for LHe applications
- Shielding by He gas or LN2
- Extremely low heat inleak
  - 0.03 W/m for 10 mm ID (77 K shield)
- 2 flow channels
- Long length between couplings

CRYOFLEX® 4-tube design for Superconducting LTS/HTS Cables

Operating media	LHe, GHe, …
Diameters (mm):	up to 84 mm ID / 220 mm OD
Single piece lengths:	several hundred meters
Heat Inleak (W/m):	depending on shield temperature and mechanical load

- Implemented in TOKI project (NIFS, Japan, 1988)
  - Current feeder for LHD (32 kA)
- Under consideration for CERN Hi-Luminosity upgrade

Selected References – Transfer Lines

1980: CERN

- Several 4-tube transfer lines
- LHe transfer lines, vapour shielded
- Total length: 400 m

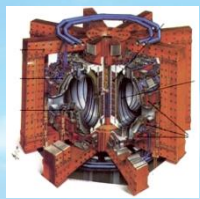

1982: J E T - Joint European Torus (Experimental Fusion Reactor)

- 6-tube design
  (4-tube LHe/GHe with additional LN2 shielding)

1989: Ariane rocket engine test facilities

- 2 x 300 m LOX, 2 x 300 m LH2
- Inner diameter: 127 mm

2008: National Synchrotron Radiation Research Center (NSRRC), Taiwan

- 2 x 200 m of LN2-shielded He-Lines (LHe supply/GHe return)

Selected References – SC Cable Cryostats

1998: TOKI Project (NIFS, Japan) – LTS Cable for Fusion Technology

- 5 tube design with LTS
- 9 x 50 m, 220 mm OD
- Complex installation path

2007: LIPA Power Cable Project, Long Island, NY

- 3 x 600 m cable cryostat

2013: FGC (Russia), St. Petersburg Project

- 2.4 km cable cryostat
- 2.4 km return line

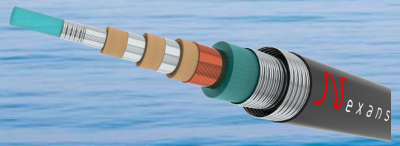

2013: AmpaCity Project

- 1 km cable cryostat

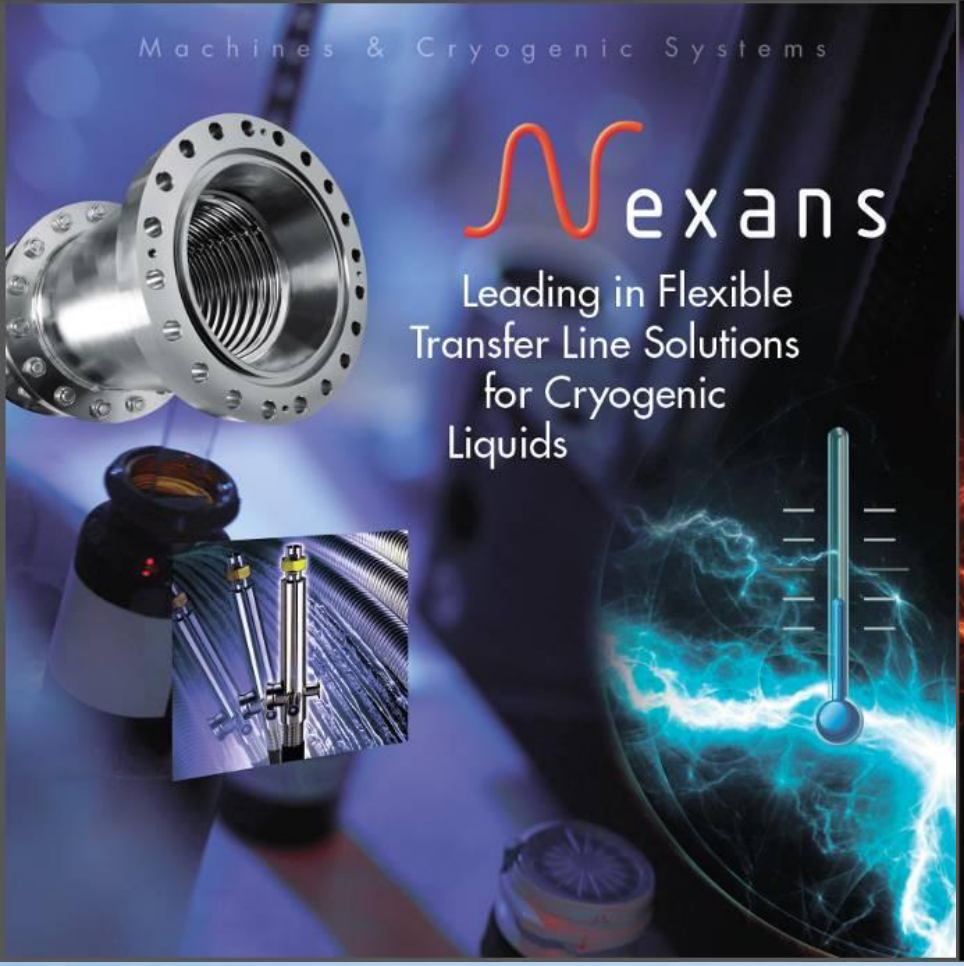

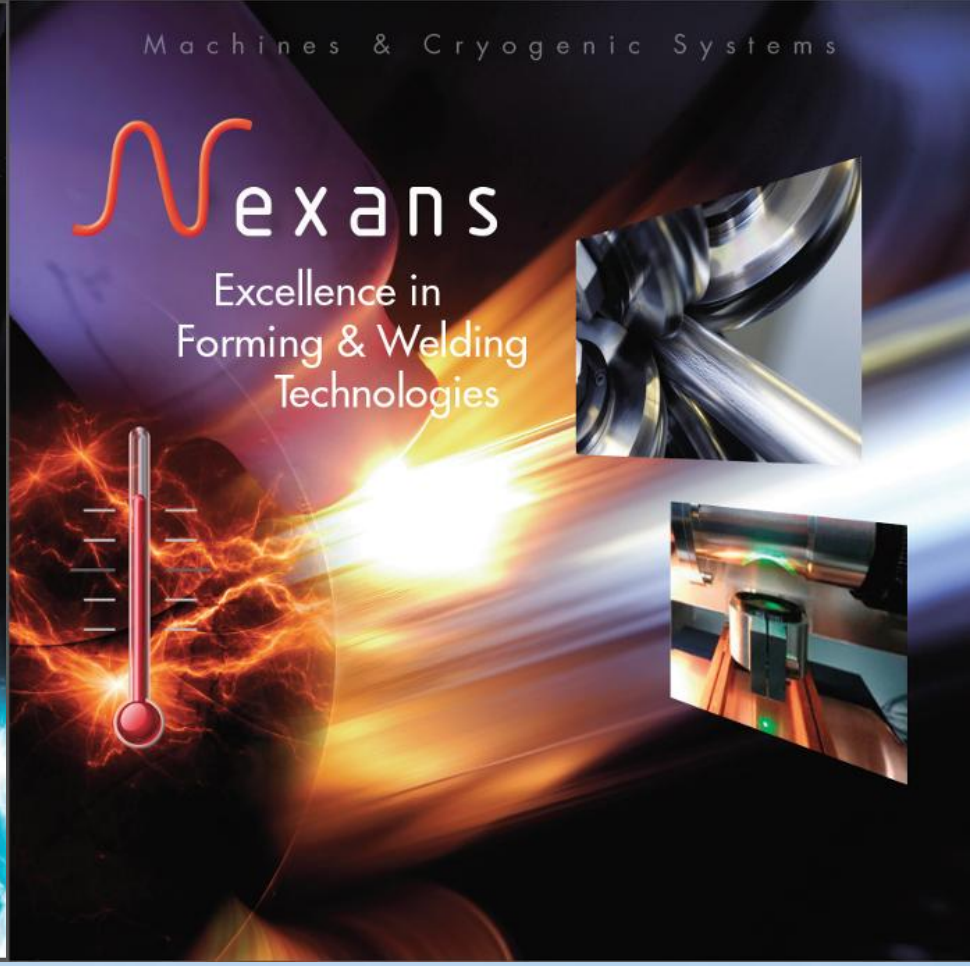

Thank You For Your Attention!

Contact: rainer.soika@nexans.com