Science & Technology Facilities Council

Muon Ionization Cooling Experiment - MICE

HEPTech - Grenoble

4-5th June 2015

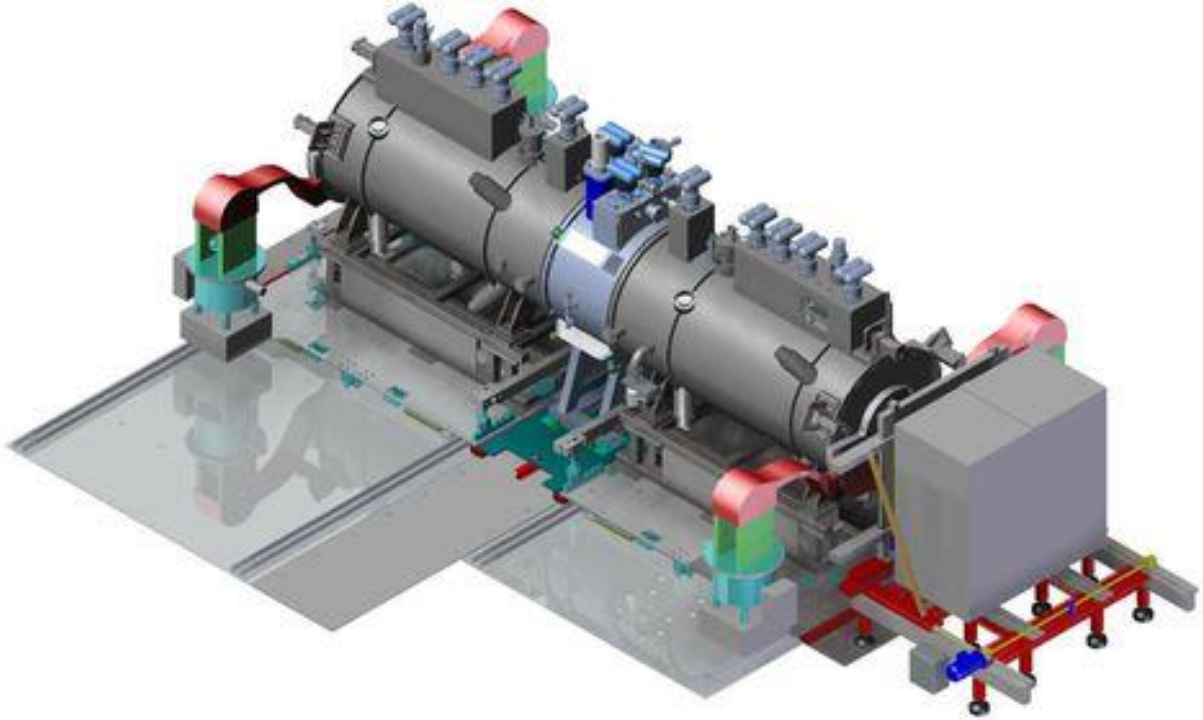

Tom Bradshaw
STFC, Rutherford Appleton Laboratory

Rationale

- The Muon Ionization Cooling Experiment (MICE) is being built by an international consortium to demonstrate part of the technology required to build a neutrino factory.
- Neutrinos are very poorly understood subatomic particles that are generated in radioactive decay and in nuclear processes in the Sun. Get about 10,000/m^2/min on earth from cosmic ray interactions
- Muons are a sub atomic particle similar to an electron but with a heavier mass. These decay into an electron and two neutrinos after 2.2µs.
- The experiment aims to show that muons can be controlled and focused into a beam ready for use in a neutrino factory – other uses could be for a Muon Collider.

Science & Technology Facilities Council

An International Experiment

Bulgaria – Science
China - magnets
Italy – Cherenkov detectors, EMR
Japan – Absorber
France - Tracker
Serbia - Science
Switzerland & CERN – Decay Solenoid, EMR detector, RF components, Magnet measurement
UK – hosting experiment, Absorber and Focus Coil, Tracker, Diffuser, RF, Controls, Hydrogen System
USA – Spectrometer Solenoids, RF components

Science & Technology Facilities Council

What is ionization cooling?

- The divergent beam of muons collide with atomic electrons (ionization bit..) slowing them down reducing the momentum
- They are then re-accelerated in the forward direction
- Repeat until beam is focused to the required degree
  - "Decrease of transverse emittance"
  - Do get heating from the scattering – need to keep this low

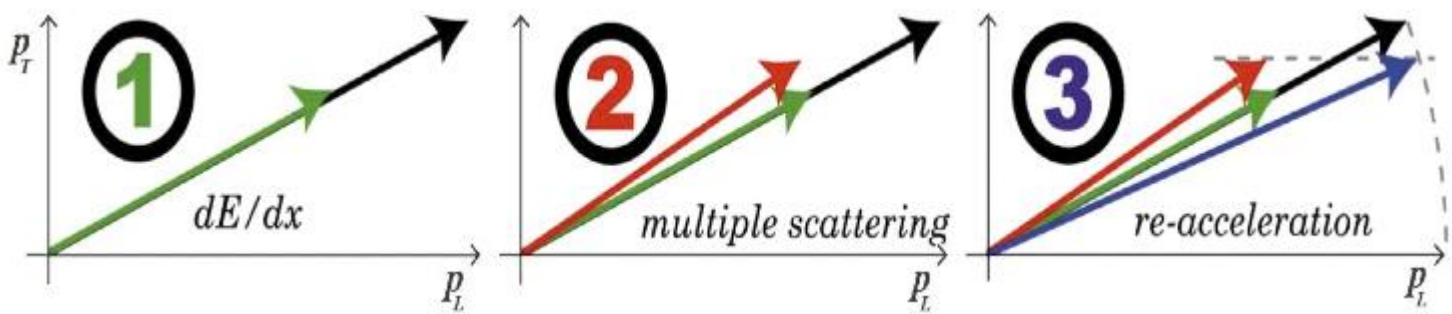

Science & Technology Facilities Council

MICE Overview

- A Titanium target is dipped into the ISIS proton beamline
- Decay products enter Decay Solenoid – unwanted particles are steered away from the beam line
- Quadrupoles steer the (divergent beam of) muons into the MICE lattice

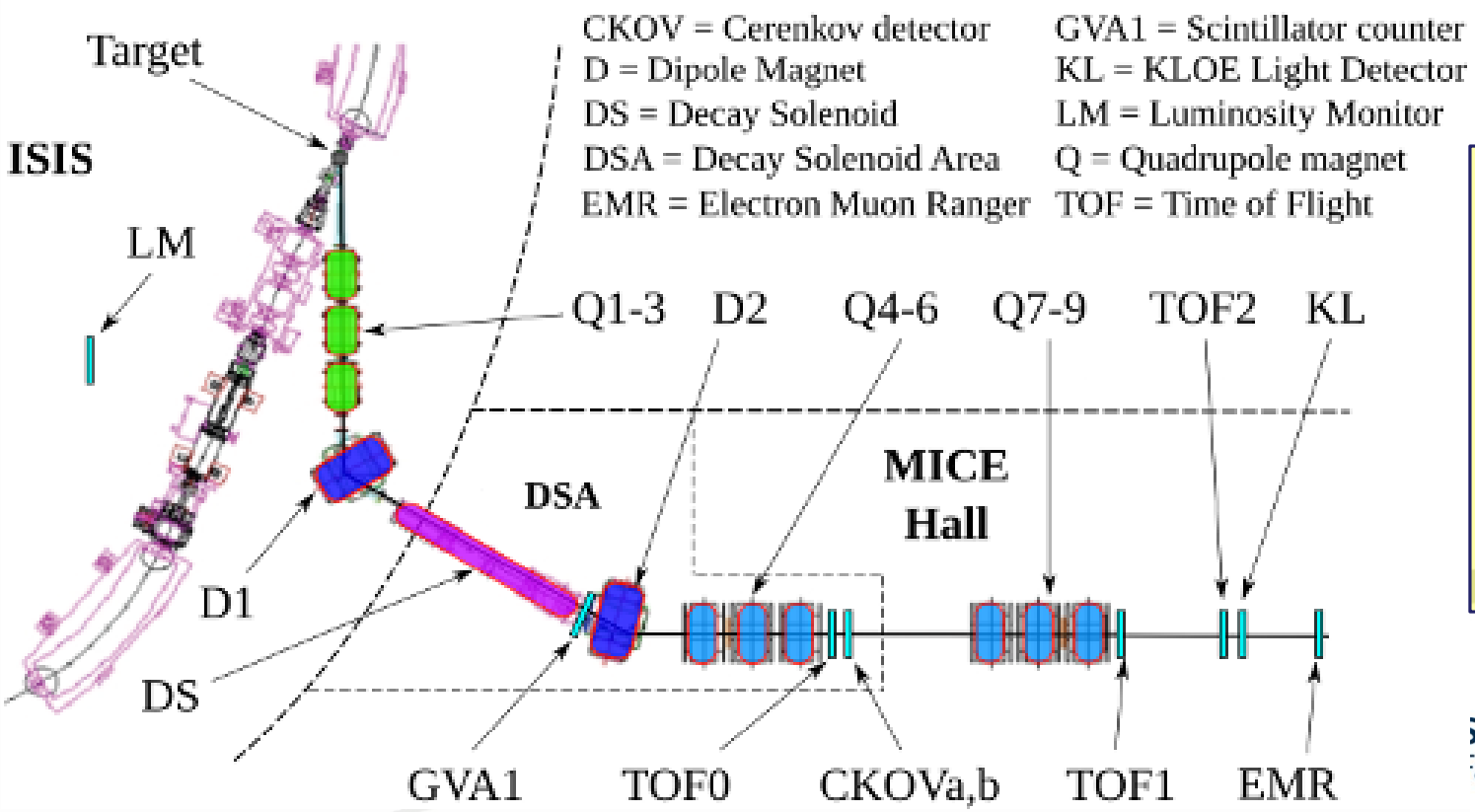

This part is the MICE Beamline – this generates the muon beam that will be studied…

Science & Technology Facilities Council

MICE Overview

Spectrometer solenoid has trackers to measure energy and direction of the particles before and after the cooling process – hence the emittance (or divergence) of the beam can be measured – we are testing the lattice as a function of absorber, magnet and beam settings.

Beam

An upstream diffuser consists of four irises made from brass and Tungsten to increase the emittance

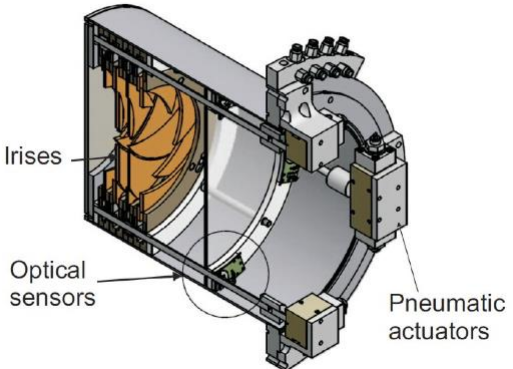

Decay Solenoid

- From Paul Scherrer Institute in Switzerland – made by Brown Boveri early 1970s
- There are ten separate “spools” that make up the magnet 5m length
- Transported to RAL and assembled into beam line
- Uses supercritical Helium to cool the spools load about 25W – quenches are completely undramatic

Science & Technology Facilities Council

Decay Solenoid

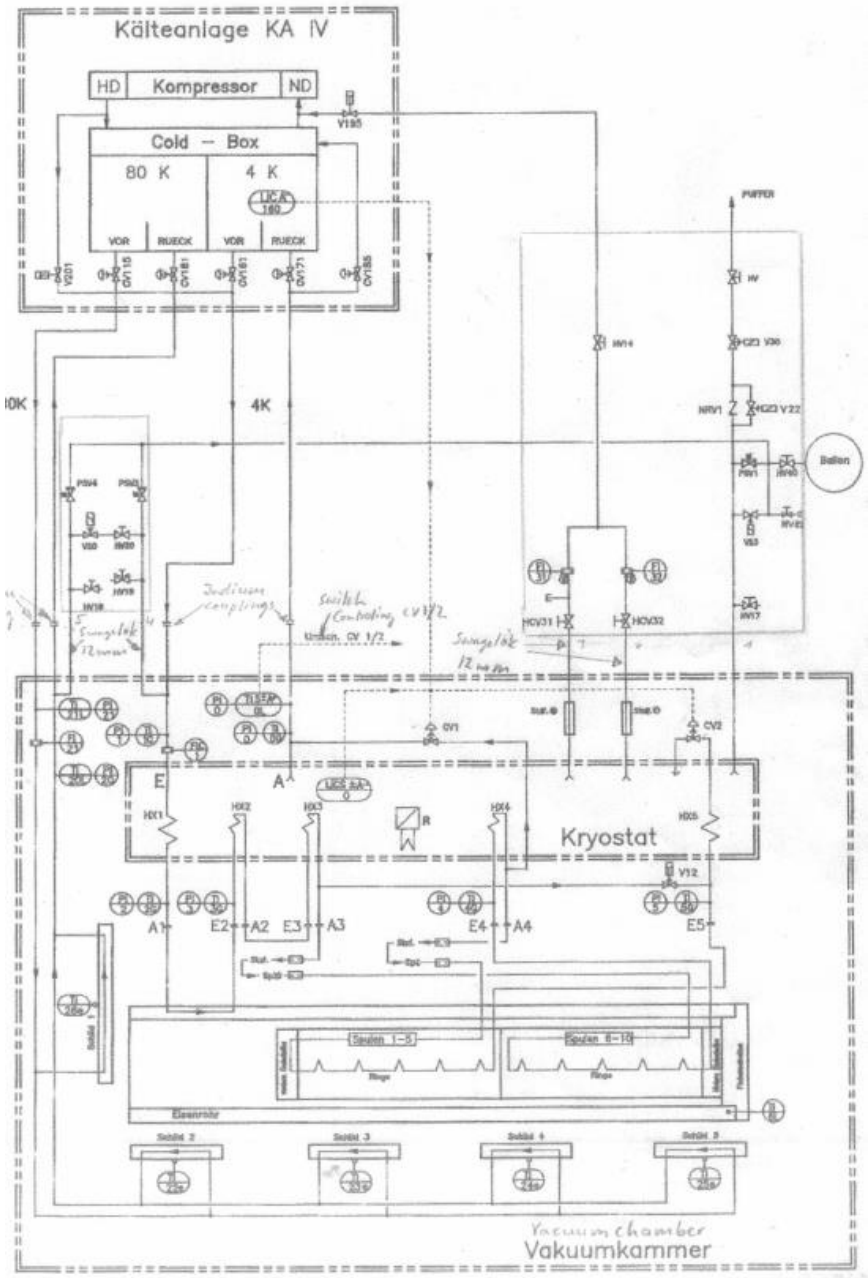

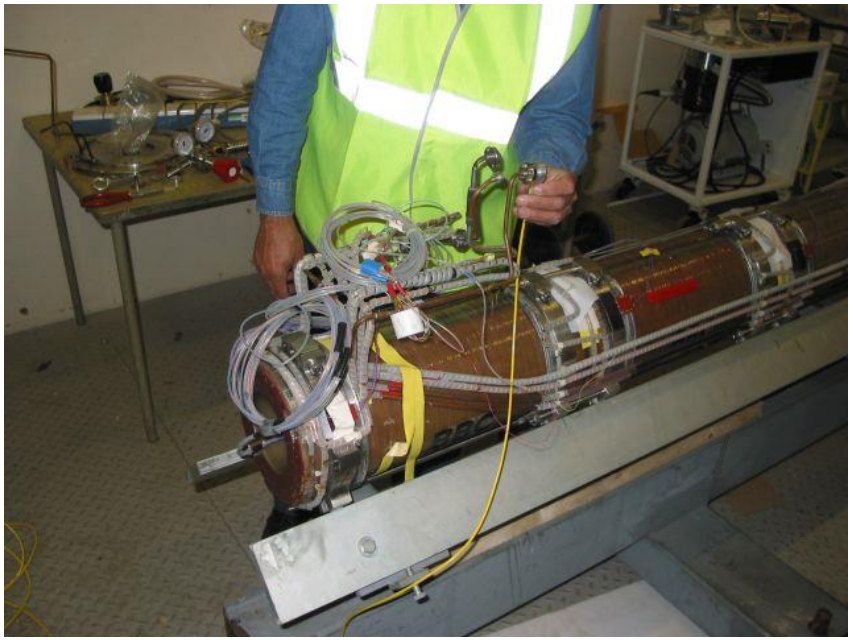

- Leads are gas cooled with a flow of ~0.1g/s
- Operated at RAL with a current of 870Amps, 5T central field
- Cu:NbTi ratio of 3.5, conductor 1.5 x 3mm – very conservative design

Science & Technology Facilities Council

Decay Solenoid

- Cryogenics provided by a Linde LR70 refrigerator
- Magnet unusually uses supercritical helium

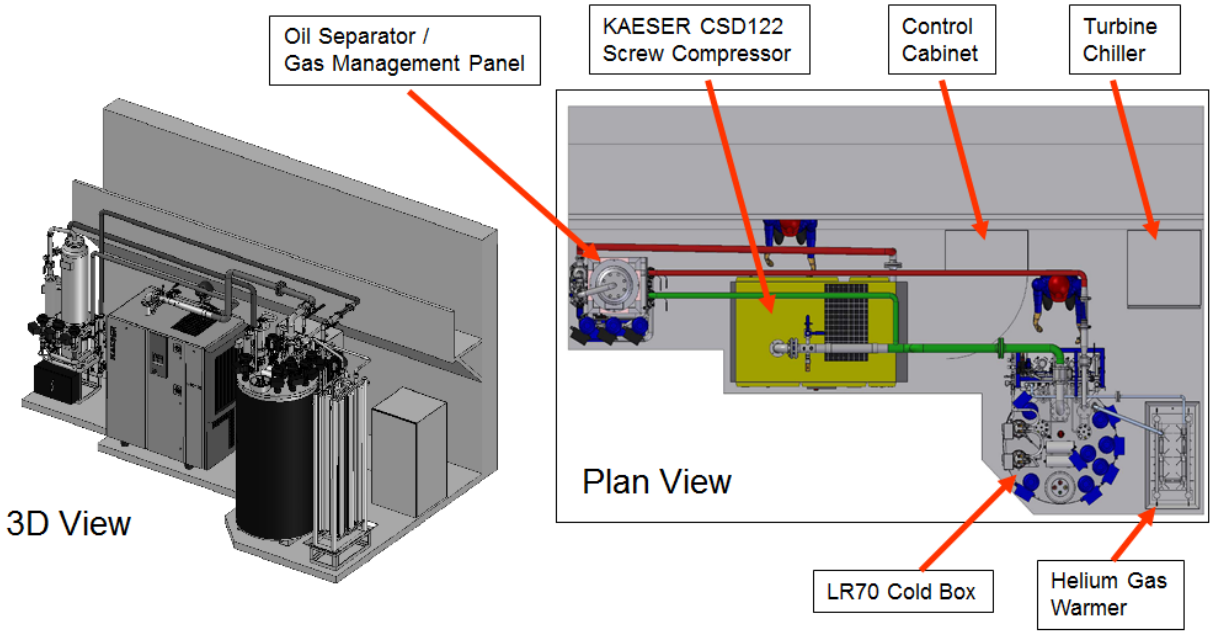

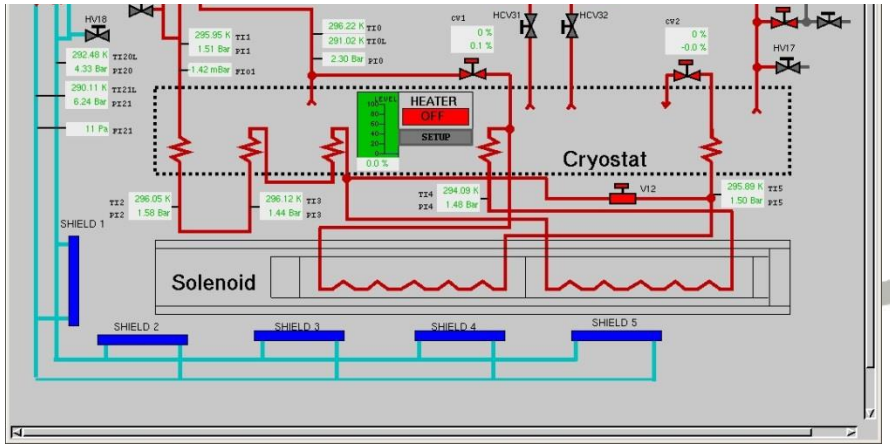

The MICE Lattice

- The rest of the MICE lattice has magnets that are cooled using cryocoolers
- The decision was taken to go down this route as it meant that the individual magnets could be tested at the host institution prior to delivery
- The MICE lattice has to be reconfigured several times and it was felt that this would be easier with cryocoolers rather than a central helium plant and a network of transfer lines

Spectrometer Solenoids

- Built at Wang NMR in California – supplied by Lawrence Berkeley National Laboratory
- Two of these are used either side of the absorber. “Tracker” detectors are located inside the bore
- These are a complicated magnetic structure – 5 coils

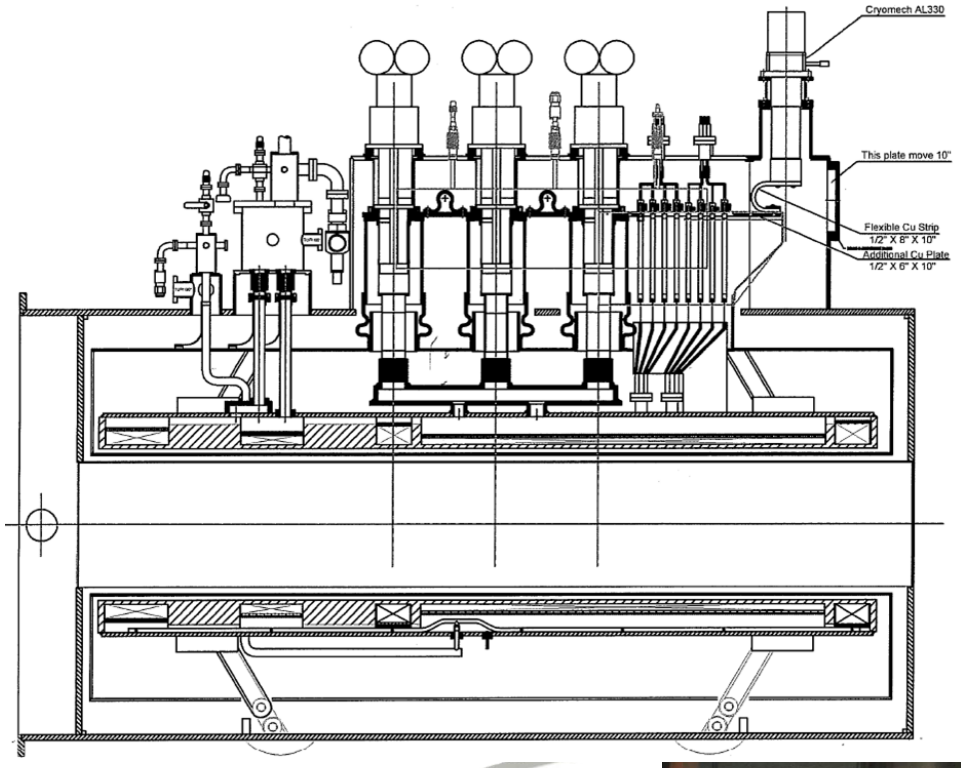

This is the most complicated of the MICE coils

1 x centre coil

2 x end coils

2 x matching coils

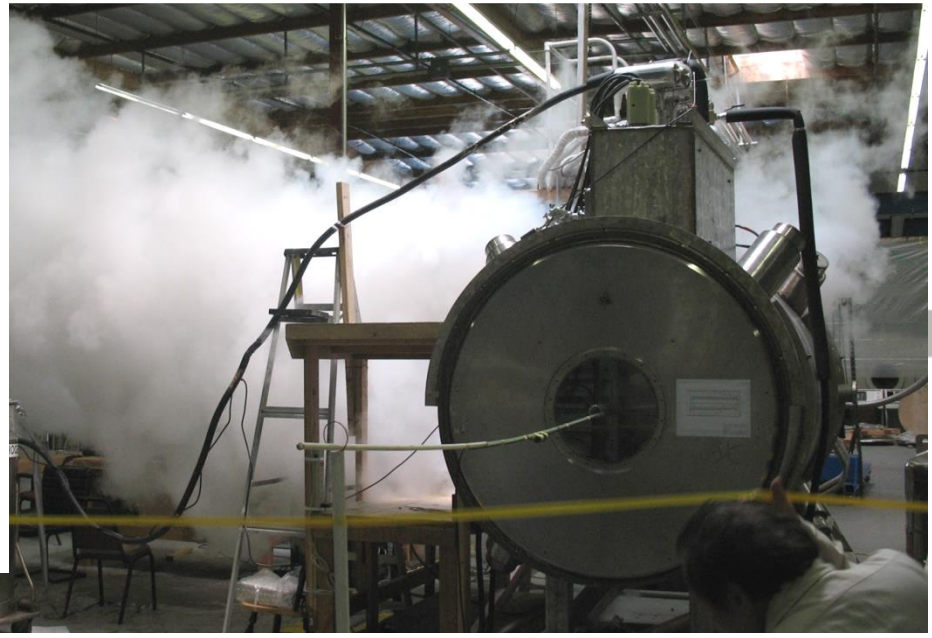

Spectrometer Solenoids

- The five coils are wound on a common Al bobbin
- Cryocoolers used to maintain liquid helium in a zero boil-off system 5 x two stage and one single stage
- There are a large number of current leads - challenging design

Science & Technology Facilities Council

Absorber and Focus Coil Module

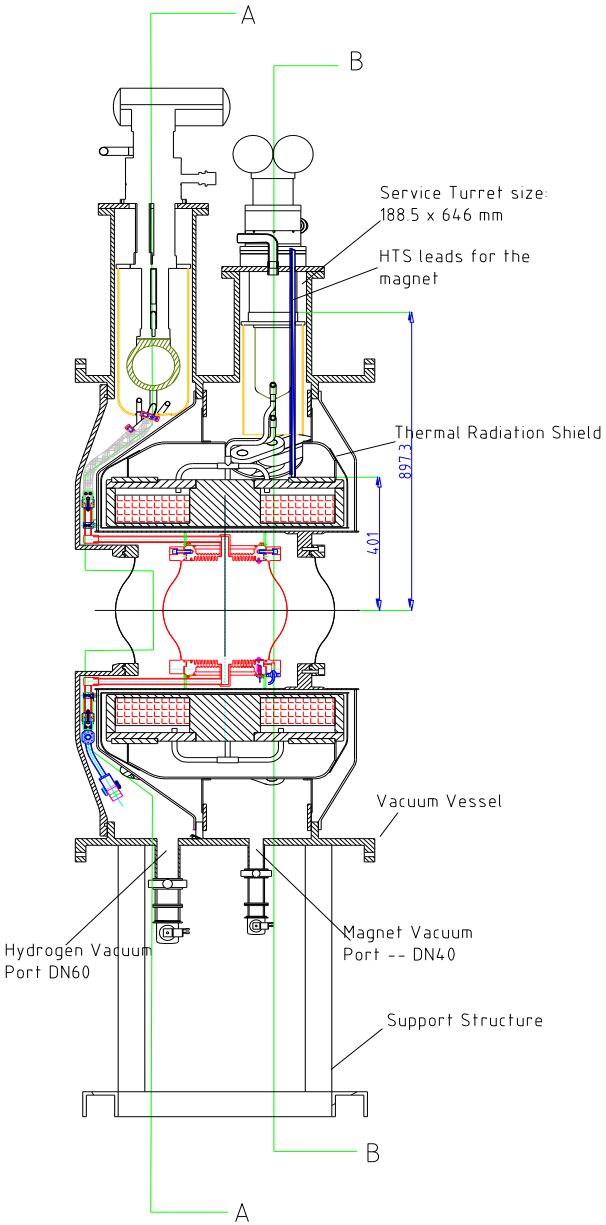

- The Absorber and Focus Coil Module is a split pair magnet
- These can be run in opposition (flip mode) or together (solenoid mode)
- At the centre is the 22litres of liquid hydrogen or the Lithium Hydride absorber

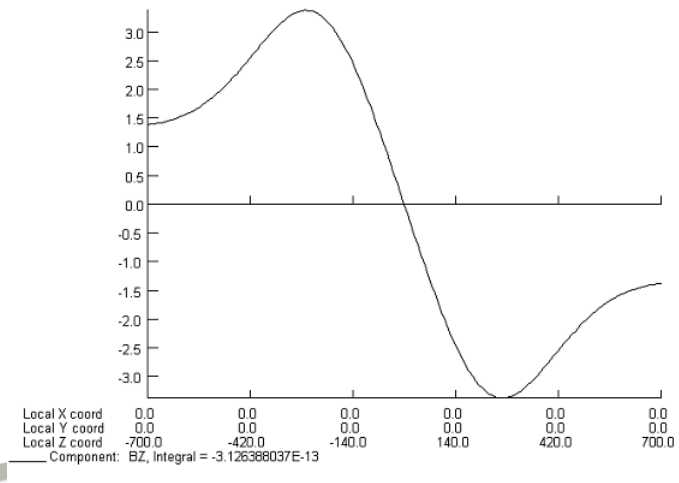

Science & Technology Facilities Council

Absorber and Focus Coil Module

- Magnet was built by Tesla Engineering to a basic design provided by the collaboration
- Two were made – the first module took ~16 training cycles but the second only took 1
- Magnets are split pairs but can be operated with field reversal or in solenoid mode

Science & Technology Facilities Council

Control of the magnetic Field

- The partial return Yoke (PRY) sits outside the magnets and controls the stray magnetic field
- Consists of 55t of iron

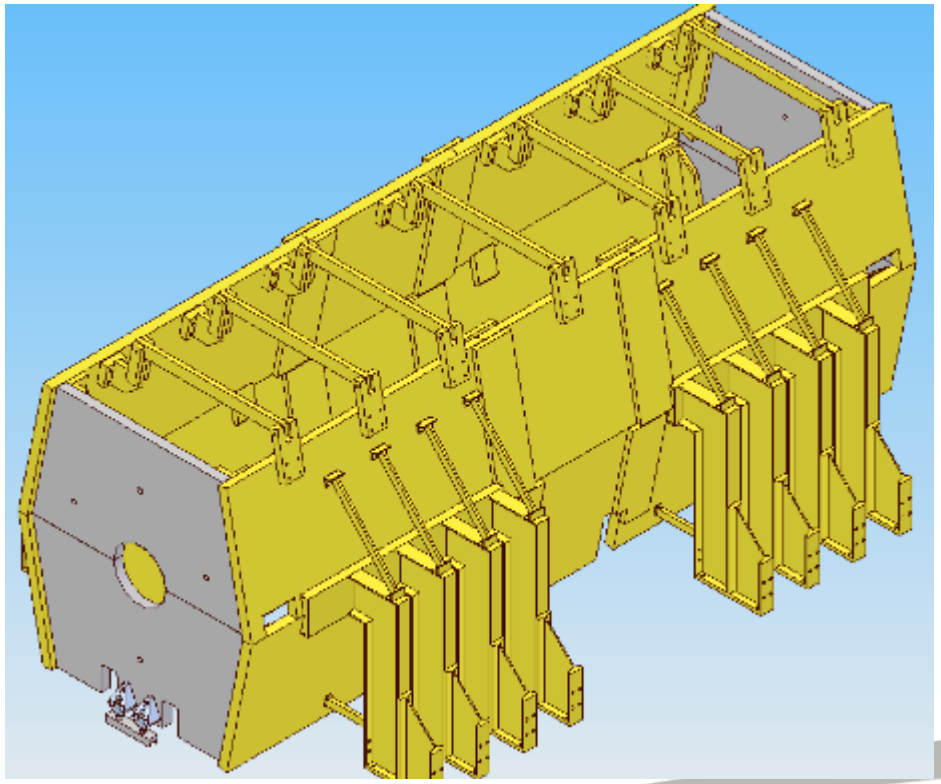

Science & Technology Facilities Council

Conclusions and Summary

- The MICE magnets have all been individually proved and are being assembled into the MICE lattice. The decay solenoid and the conventional quadrupoles have been in place for some time
- The MICE collaboration will demonstrate ionization cooling and subsequent reacceleration by 2017 and will use Lithium Hydride and liquid Hydrogen absorbers in two separate experiments
- The acceleration will be provided by two 201MHz cavities
- This will provide an understanding of muon cooling for use in a neutrino factory or for a proposed muon collider which will be multi TeV - “Higgs factory”

Science & Technology Facilities Council

Acknowledgements

STFC Rutherford Appleton Laboratory

Elwyn Baynham

Victoria Bayliss

Roy Preece

Stephen Watson

Mike Courthold

Mark Tucker

STFC Daresbury Laboratory

Stephen Griffiths

Ian Mullacrane

Chris White

Trevor Hartnett

Oxford University

John Cobb

Wing Lau

Fermilab

Durga Rajaram

Lawrence Berkeley National Laboratory

Steven Virostek

Michael Green

Imperial College London

Victoria Blackmore

Science & Technology Facilities Council

END

Science & Technology Facilities Council